Plotted: Apr 26, 2016 - 11:57am

INDEX TO DRAWINGS

T-1	INDEX TO DRAWINGS
T-2	LOCATION MAP, VICINITY MAP AND SITE PLAN
S-1	FOUNDATION PLAN
S-2	FLOOR FRAMING PLAN
S-3	ELEVATIONS
S-4	ELEVATIONS
S-5	PARTIAL FLOOR FRAMING PLAN
S-6	PARTIAL FLOOR FRAMING PLAN
S-7	PARTIAL FLOOR FRAMING PLAN
S-8	PLANK REPAIR DETAIL
S-9	FLOOR STIFFENING REPAIR DETAIL
S-10	FASCIA REPAIR DETAIL
S-11	LEDGER REPAIR DETAIL
S-12	CRACKED FASCIA REPAIR DETAIL
S-13	POST BASE SPALL REPAIR DETAIL

STATE OF HAWAII
DEPARMENT OF TRANSPORTATION
HARBORS DIVISION

HALE AWA KU MOKU BUILDING
79 SOUTH NIMITZ HIGHWAY
HONOLULU, HI 96813-4898

H.C. 50134 REPAIR DISTRICT OFFICE, HILO HARBOR, HAWAII, HAWAII

INDEX TO DRAWINGS

Sheet No.

T-1

Plotted: Apr 28, 2010 - 11:57am

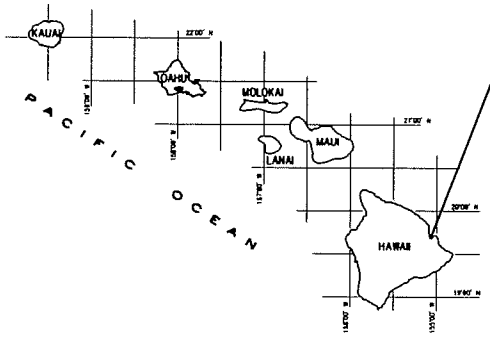

PROJECT LOCATION
SEE VICINITY MAP

HAWAIIAN ISLANDS

LOCATION MAP
NOT TO SCALE

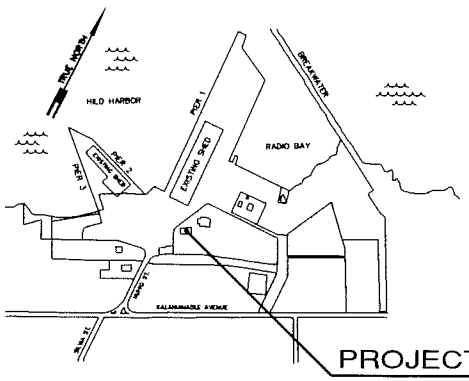

PROJECT SITE
JOB H.C. 50134

VICINITY MAP
NOT TO SCALE

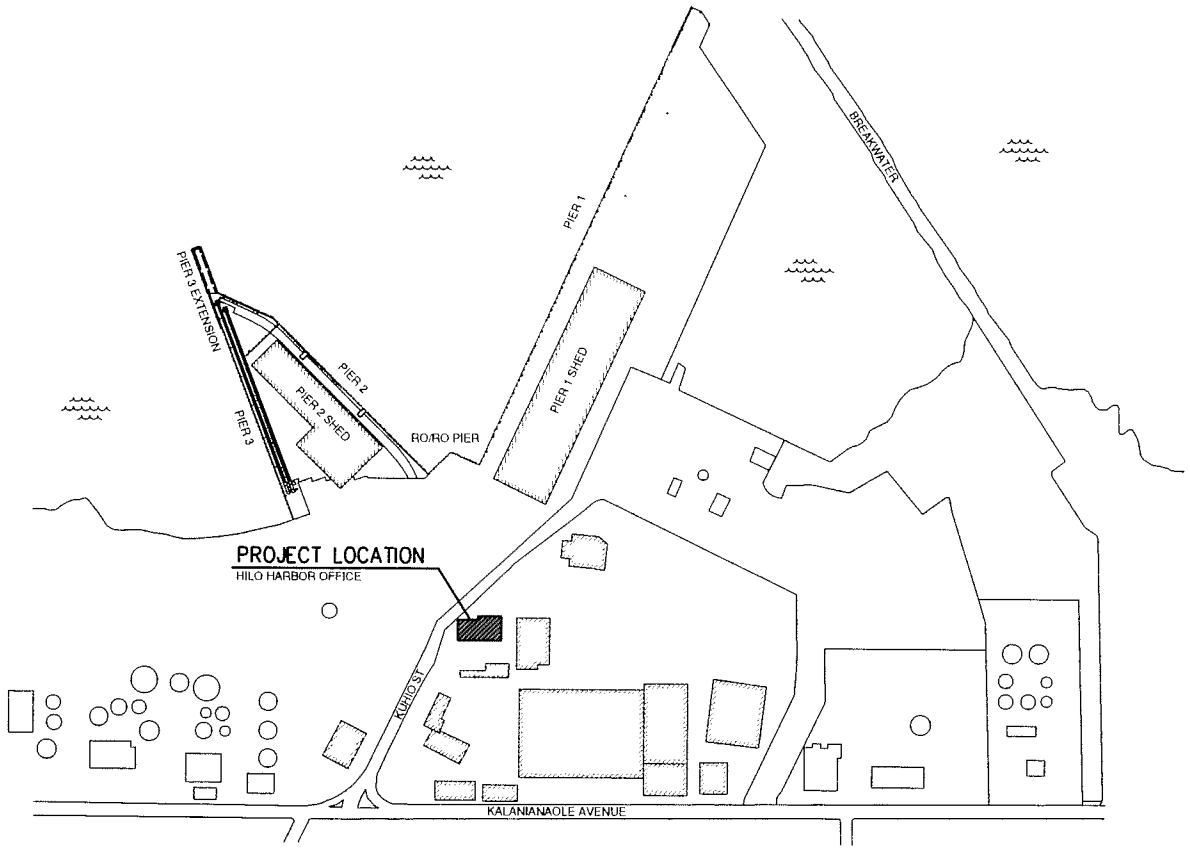

SITE PLAN
NOT TO SCALE

NORTH

STATE OF HAWAII
DEPARMENT OF TRANSPORTATION
HARBORS DIVISION

HALE AWA KU MOKU BUILDING
79 SOUTH NIMITZ HIGHWAY
HONOLULU, HI 96813-4898

H.C. 50134 REPAIR DISTRICT OFFICE, HILO HARBOR, HAWAII, HAWAII

LOCATION MAP, VICINITY MAP AND SITE PLAN

Sheet No.
T-2
Sheet 2 of 15

Plotted: Apr 26, 2018 - 2:36pm

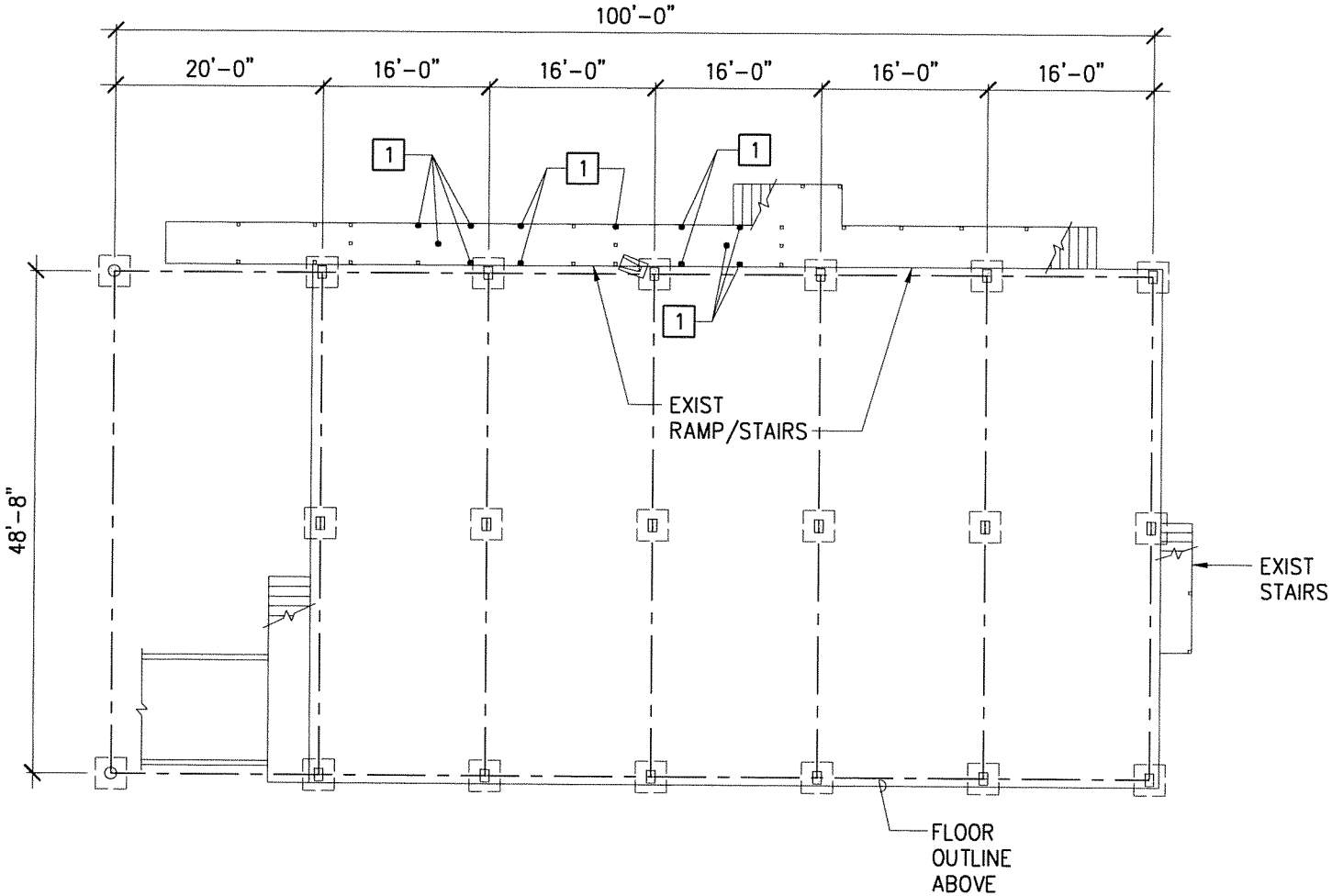

FOUNDATION PLAN

SCALE: 1/16" = 1'-0"

NORTH

1 POST BASE SPALL REPAIR (12 TOTAL), SEE DETAIL 1/S-13

STATE OF HAWAII
DEPARMENT OF TRANSPORTATION
HARBORS DIVISION

HALE AWA KU MOKU BUILDING
79 SOUTH NIMITZ HIGHWAY
HONOLULU, HI 96813-4898

H.C. 50134 REPAIR DISTRICT OFFICE, HILO HARBOR, HAWAII, HAWAII

FOUNDATION PLAN

Sheet No.

S-1

Plotted: Apr 20, 2016 - 2:36pm

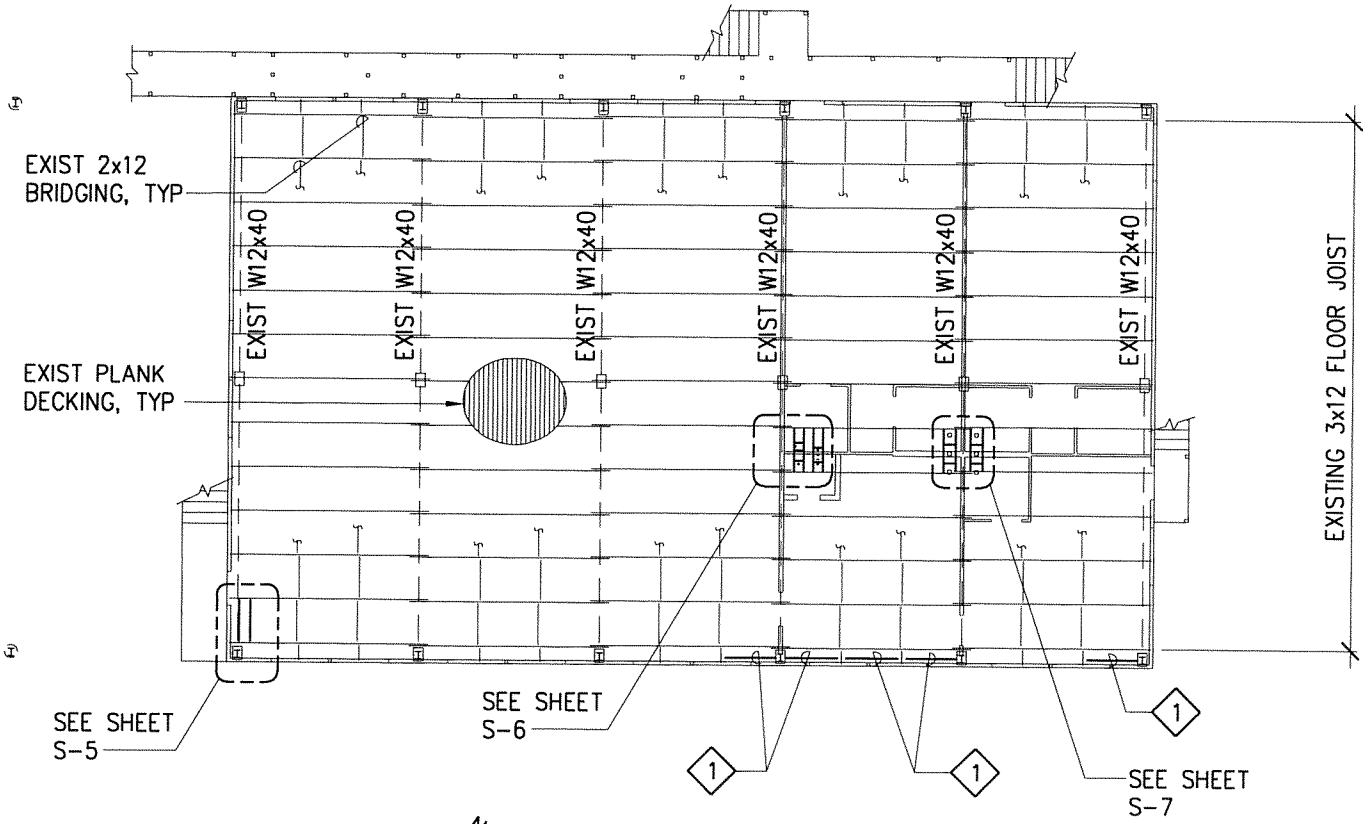

FLOOR FRAMING PLAN

SCALE: 1/16" = 1'-0"

1 4x6 LEDGER (5 TOTAL), SEE DETAIL 1/S-11

STATE OF HAWAII
DEPARMENT OF TRANSPORTATION
HARBORS DIVISION

HALE AWA KU MOKU BUILDING
79 SOUTH NIMITZ HIGHWAY
HONOLULU, HI 96813-4898

H.C. 50134 REPAIR DISTRICT OFFICE, HILO HARBOR, HAWAII, HAWAII

FLOOR FRAMING PLAN

Sheet No.
S-2
Sheet 4 of 15

Plotted: Apr 20, 2018 - 2:37pm

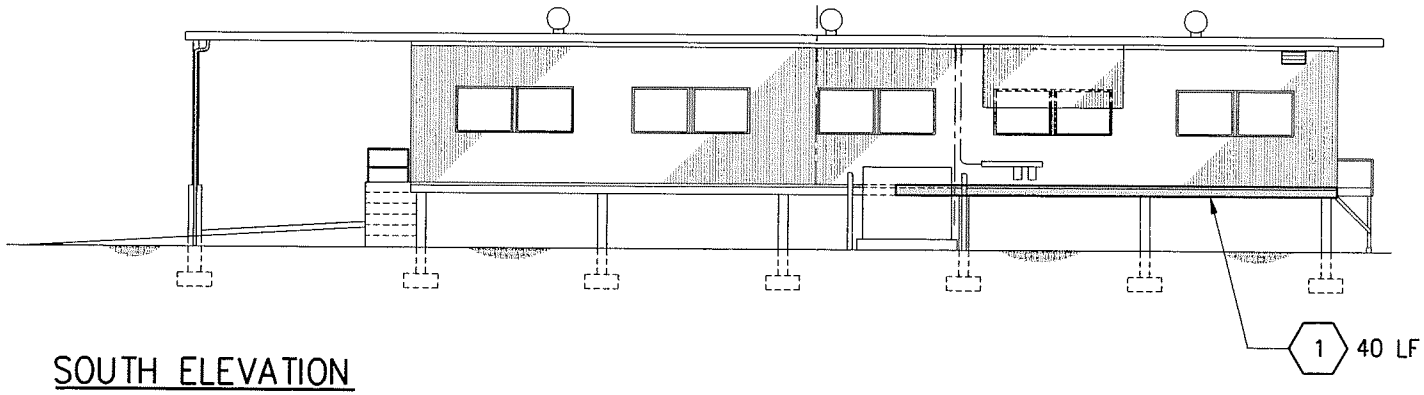

SOUTH ELEVATION

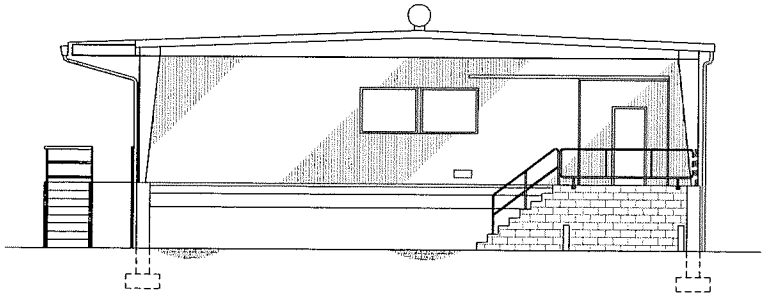

WEST ELEVATION

1 REPLACE FASCIA, SEE DETAIL 1/S-10

ELEVATIONS

SCALE: 1/16" = 1'-0"

STATE OF HAWAII
DEPARMENT OF TRANSPORTATION
HARBORS DIVISION

HALE AWA KU MOKU BUILDING
79 SOUTH NIMITZ HIGHWAY
HONOLULU, HI 96813-4898

H.C. 50134 REPAIR DISTRICT OFFICE, HILO HARBOR, HAWAII, HAWAII

ELEVATIONS

Sheet No.
S-3
Sheet 5 of 15

Plotted Apr 28, 2010 - 2:37pm

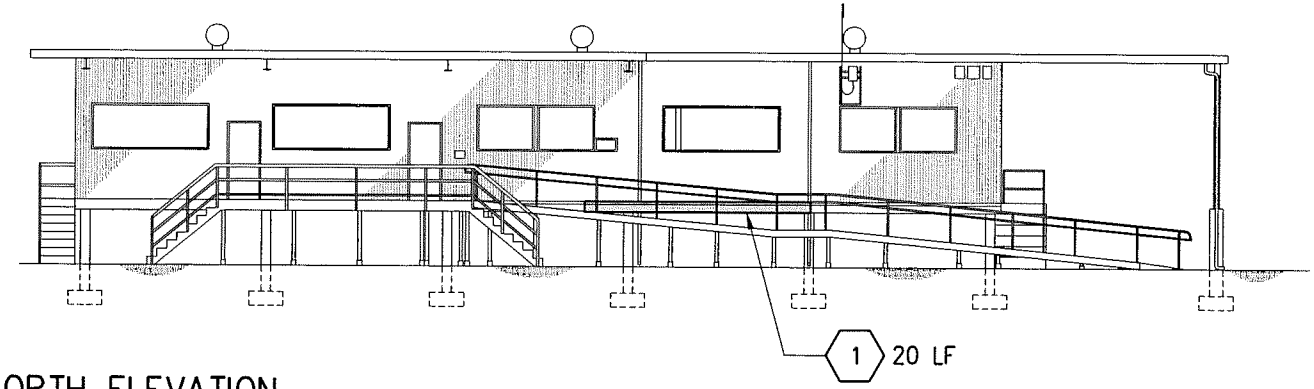

NORTH ELEVATION

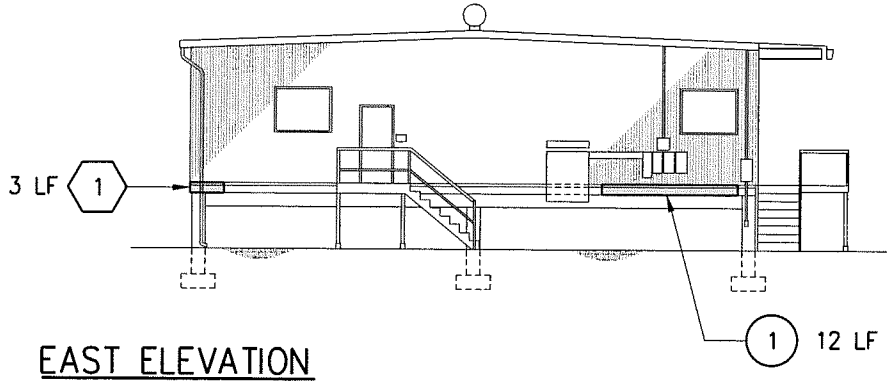

EAST ELEVATION

1 REPLACE FASCIA, SEE DETAIL 1/S-10

1 CRACKED FASCIA, SEE DETAIL 1/S-12

ELEVATIONS

SCALE: 1/16" = 1'-0"

STATE OF HAWAII
DEPARMENT OF TRANSPORTATION
HARBORS DIVISION

HALE AWA KU MOKU BUILDING
79 SOUTH NIMITZ HIGHWAY
HONOLULU, HI 96813-4898

H.C. 50134 REPAIR DISTRICT OFFICE, HILO HARBOR, HAWAII, HAWAII

ELEVATIONS

Sheet No.
S-4
Sheet 6 of 15

Plotted Apr 28, 2016 - 11:51am

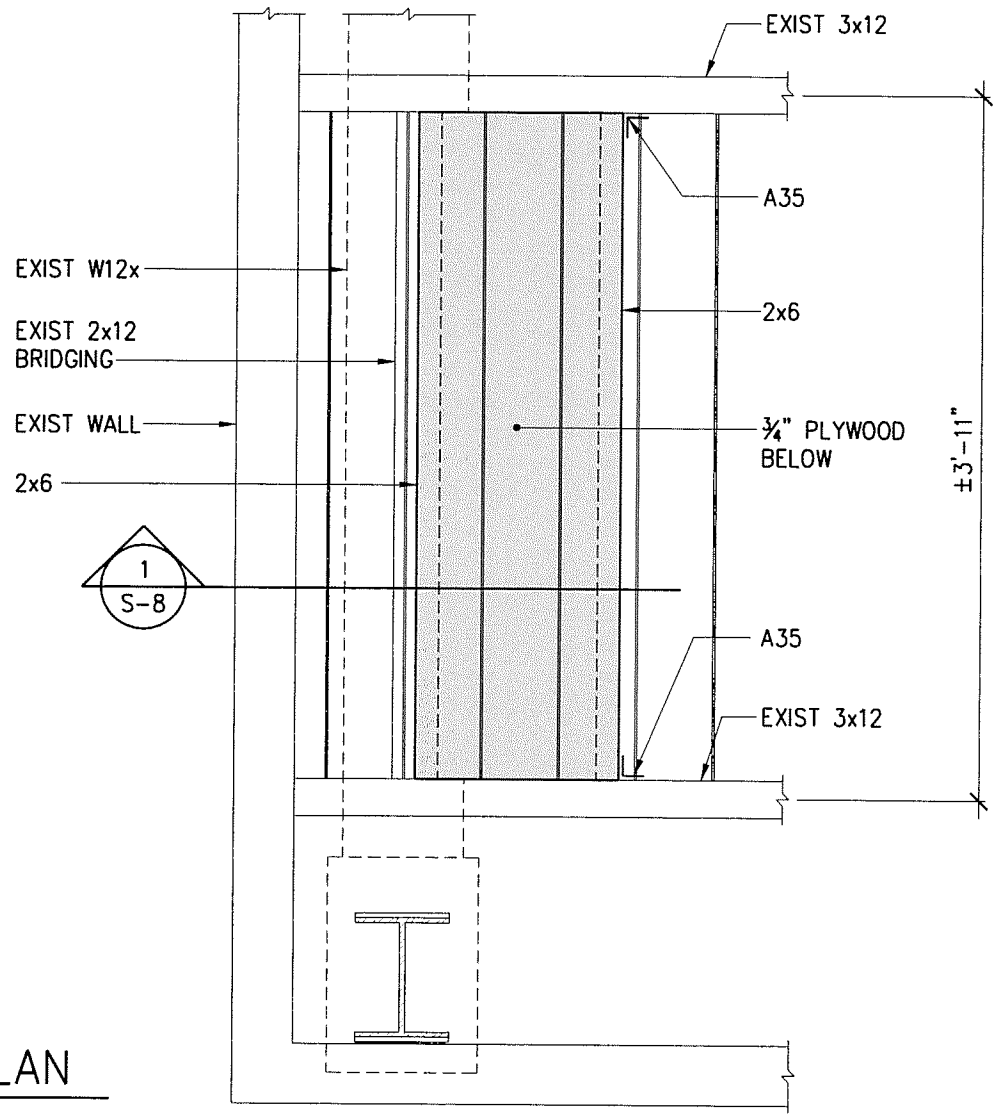

PARTIAL FLOOR FRAMING PLAN

SCALE: 1" = 1'-0"

STATE OF HAWAII
DEPARMENT OF TRANSPORTATION
HARBORS DIVISION

HALE AWA KU MOKU BUILDING
79 SOUTH NIMITZ HIGHWAY
HONOLULU, HI 96813-4898

H.C. 50134 REPAIR DISTRICT OFFICE, HILO HARBOR, HAWAII, HAWAII

PARTIAL FLOOR FRAMING PLAN

Sheet No.
S-5
Sheet 7 of 15

Plotted: Apr 28, 2016 - 11:51am

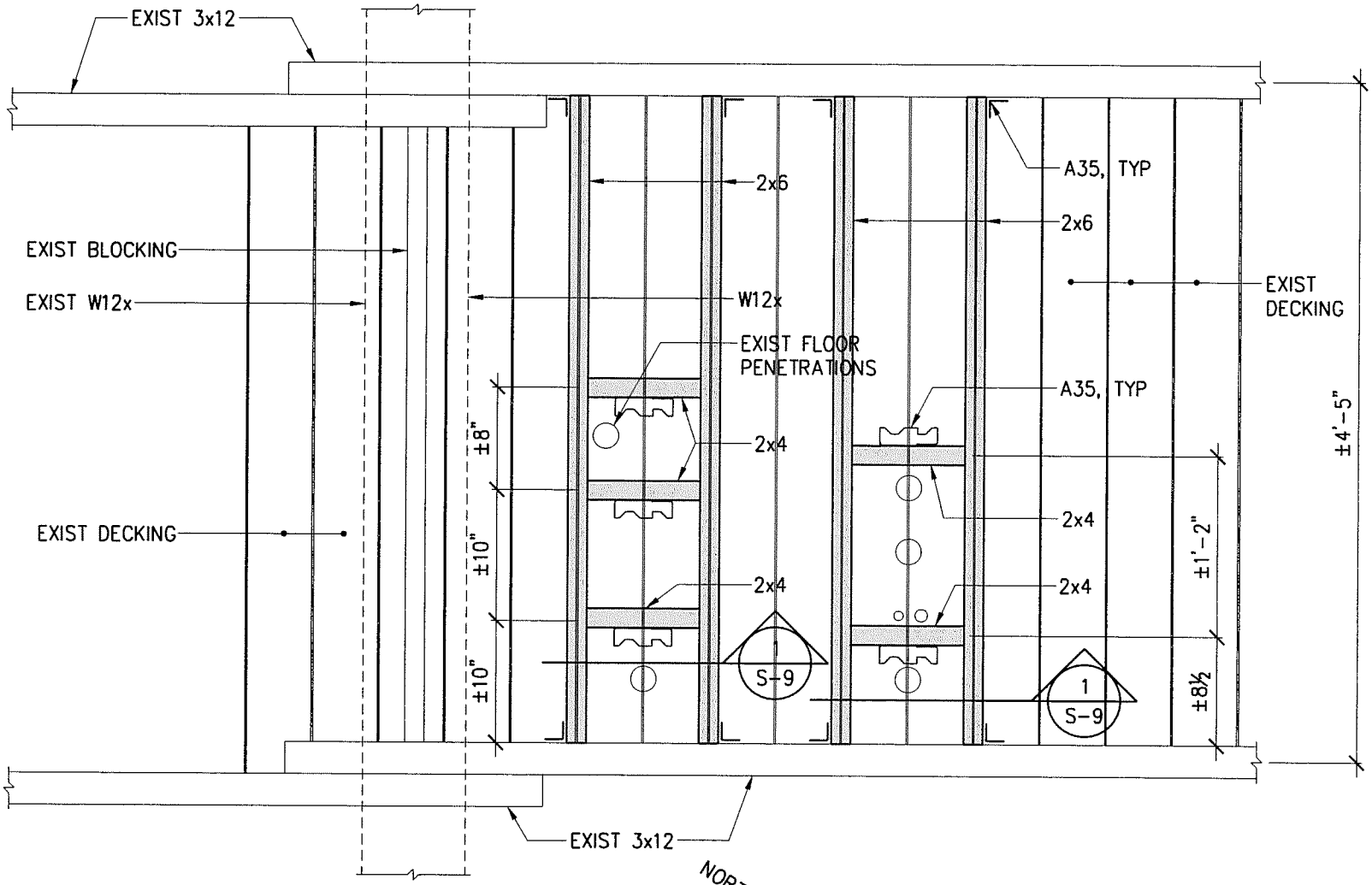

PARTIAL FLOOR FRAMING PLAN

SCALE: 1" = 1'-0"

STATE OF HAWAII
DEPARMENT OF TRANSPORTATION
HARBORS DIVISION

HALE AWA KU MOKU BUILDING
79 SOUTH NIMITZ HIGHWAY
HONOLULU, HI 96813-4898

H.C. 50134 REPAIR DISTRICT OFFICE, HILO HARBOR, HAWAII, HAWAII

PARTIAL FLOOR FRAMING PLAN

Sheet No.
S-6
Sheet 8 of 15

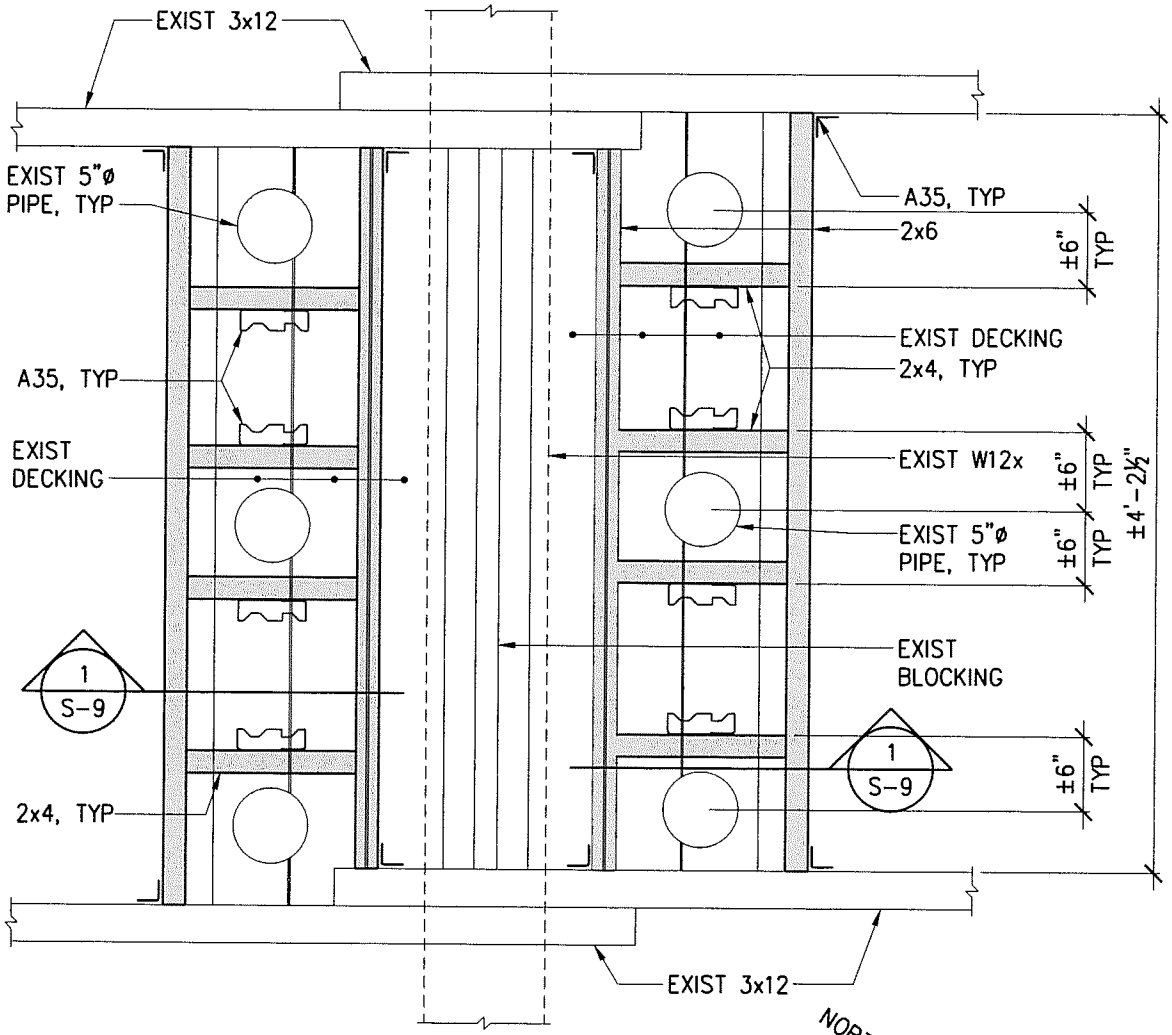

PARTIAL FLOOR FRAMING PLAN

SCALE: 1" = 1'-0"

STATE OF HAWAII
DEPARMENT OF TRANSPORTATION
HARBORS DIVISION

HALE AWA KU MOKU BUILDING
79 SOUTH NIMITZ HIGHWAY
HONOLULU, HI 96813-4898

H.C. 50134 REPAIR DISTRICT OFFICE, HILO HARBOR, HAWAII, HAWAII

PARTIAL FLOOR FRAMING PLAN

Sheet No.
S-7
Sheet 9 of 15

Plotted: Apr 28, 2016 - 11:52am

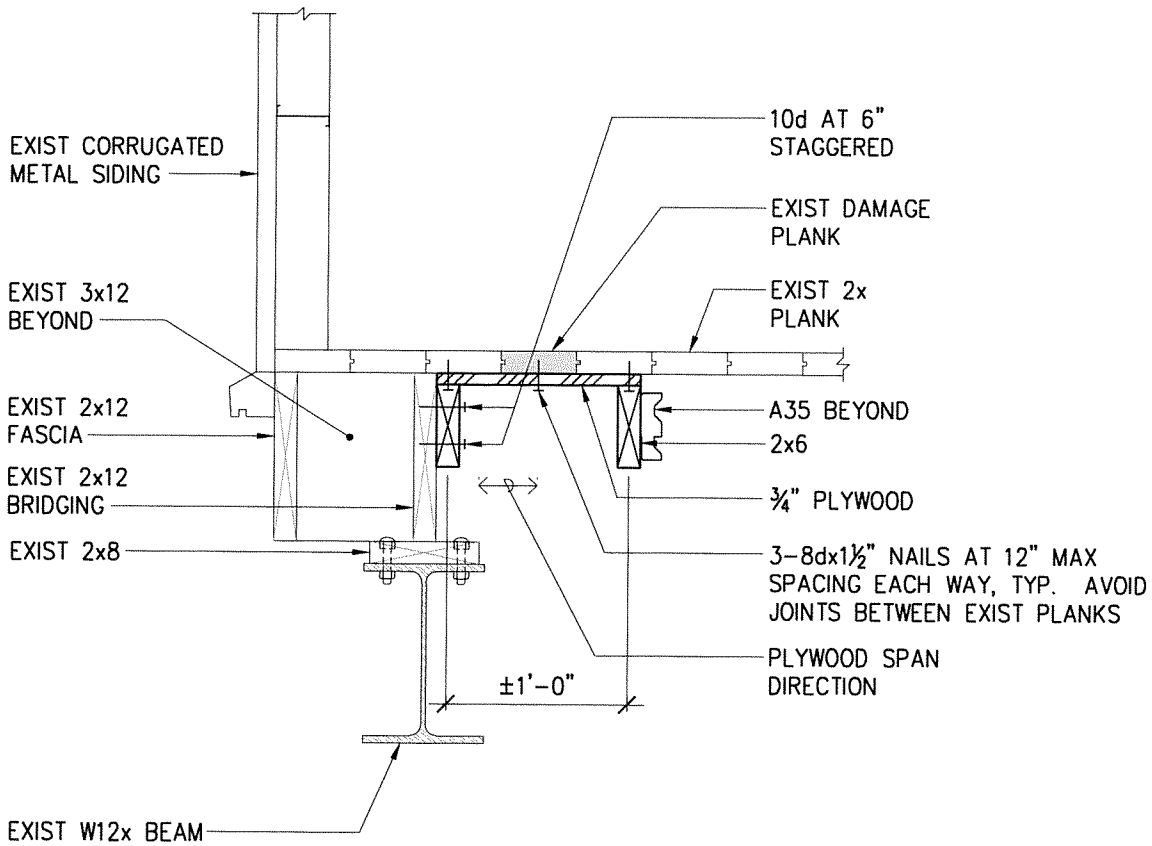

1 / S-8

PLANK REPAIR DETAIL

SCALE: 1" = 1'-0"

STATE OF HAWAII
DEPARMENT OF TRANSPORTATION
HARBORS DIVISION

HALE AWA KU MOKU BUILDING
79 SOUTH NIMITZ HIGHWAY
HONOLULU, HI 96813-4898

H.C. 50134 REPAIR DISTRICT OFFICE, HILO HARBOR, HAWAII, HAWAII

PLANK REPAIR DETAIL

Sheet No.
S-8
Sheet 10 of 15

Plotted: Apr 28, 2016 - 11:52am

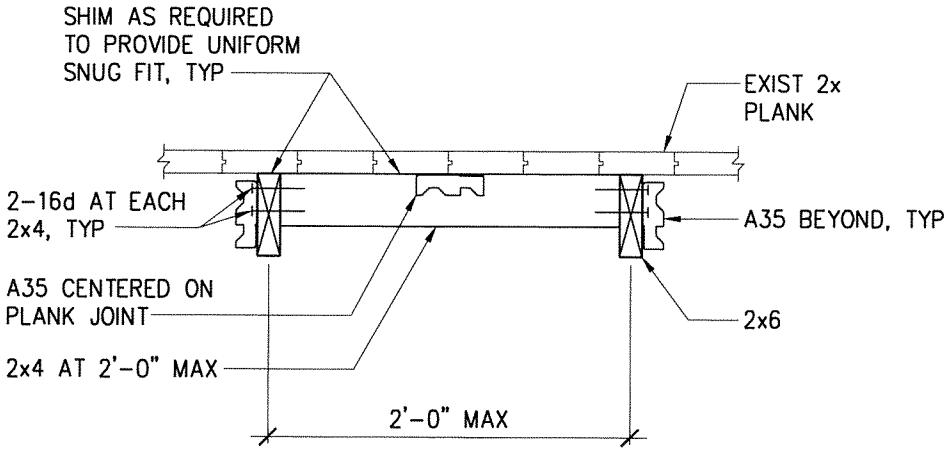

1
S-9

FLOOR STIFFENING REPAIR DETAIL

SCALE: 1" = 1'-0"

STATE OF HAWAII
DEPARMENT OF TRANSPORTATION
HARBORS DIVISION

HALE AWA KU MOKU BUILDING
79 SOUTH NIMITZ HIGHWAY
HONOLULU, HI 96813-4898

H.C. 50134 REPAIR DISTRICT OFFICE, HILO HARBOR, HAWAII, HAWAII

FLOOR STIFFENING REPAIR DETAIL

Sheet No.
S-9
Sheet 11 of 15

Plotted: Apr 26, 2018 - 11:53am

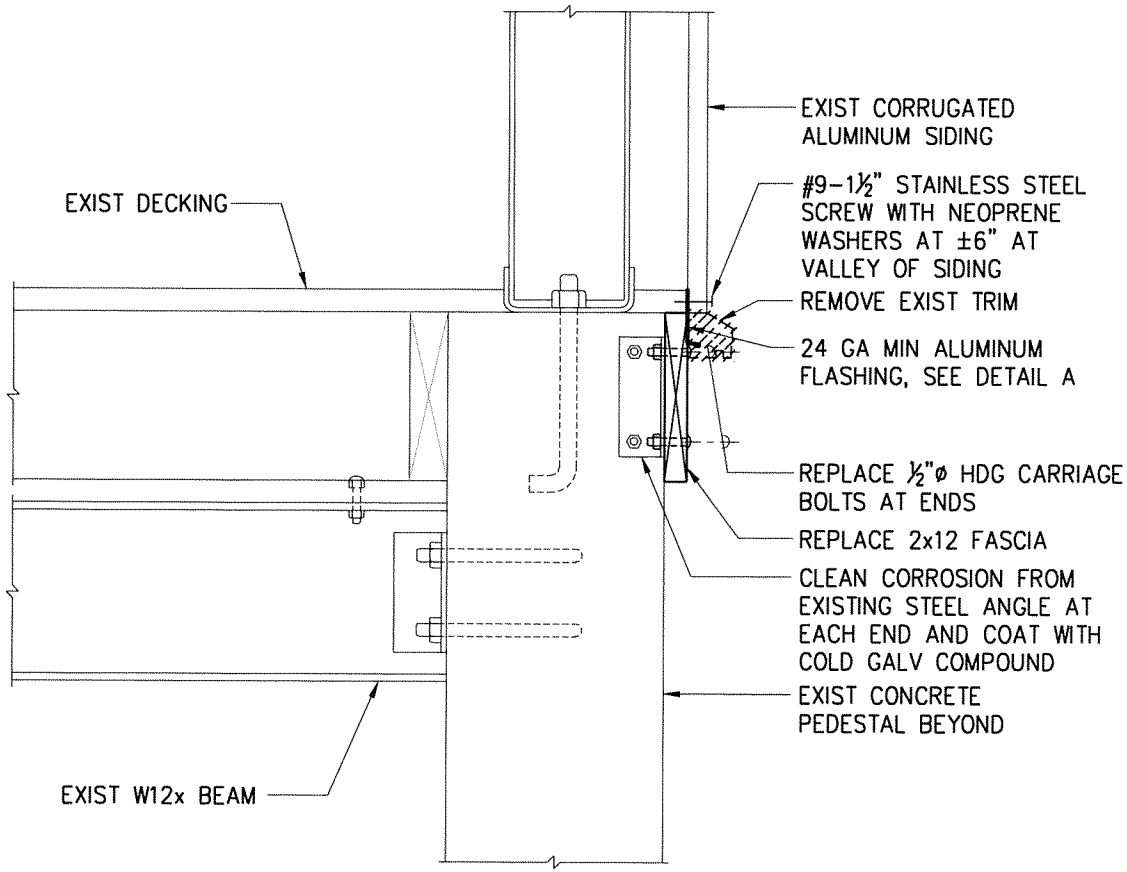

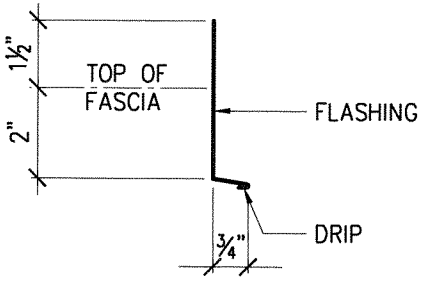

DETAIL A

1 / S-10 FASCIA REPAIR DETAIL

SCALE: 1" = 1'-0"

1

STATE OF HAWAII
DEPARMENT OF TRANSPORTATION
HARBORS DIVISION

HALE AWA KU MOKU BUILDING
79 SOUTH NIMITZ HIGHWAY
HONOLULU, HI 96813-4898

H.C. 50134 REPAIR DISTRICT OFFICE, HILO HARBOR, HAWAII, HAWAII

FASCIA REPAIR DETAIL

Sheet No.
S-10
Sheet 12 of 15

Plotted: Apr 28, 2016 - 11:53am

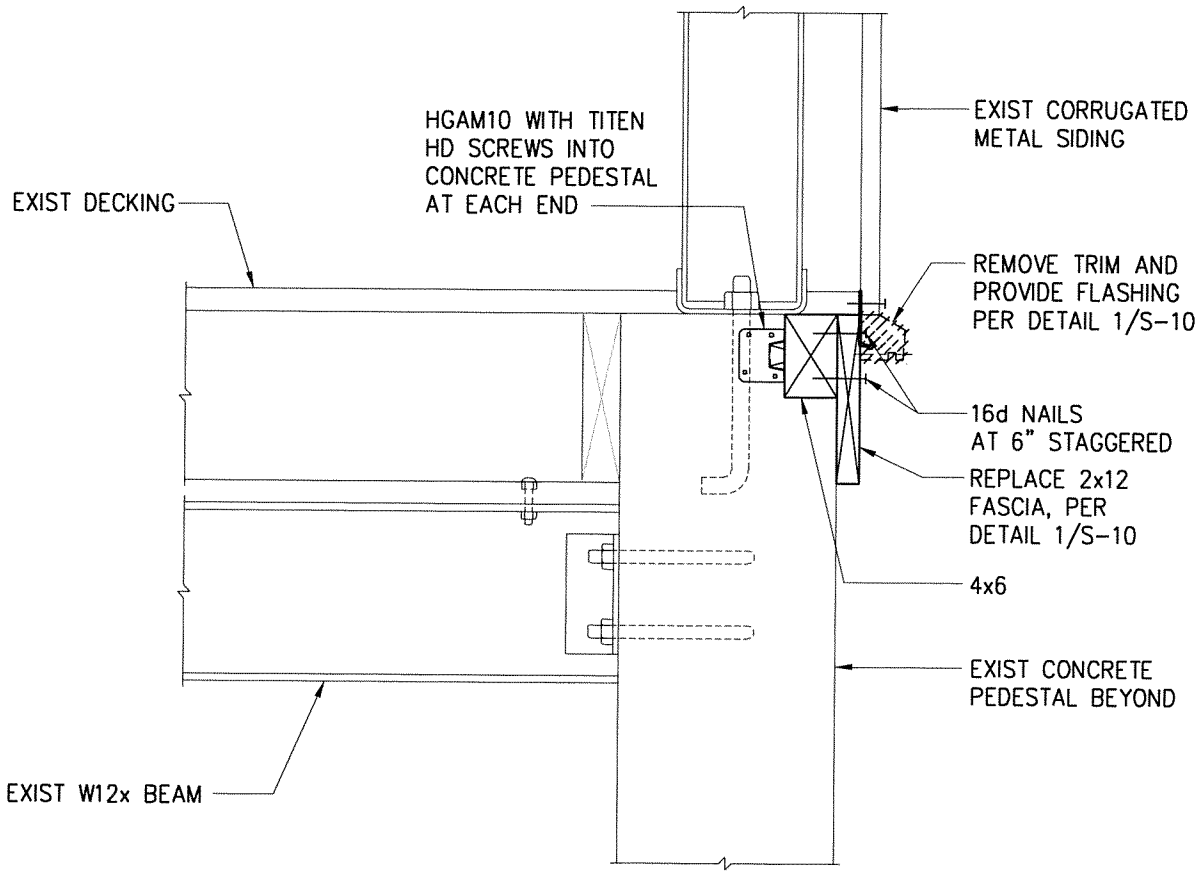

1 / S-11 LEDGER REPAIR DETAIL

SCALE: 1" = 1'-0"

1

STATE OF HAWAII
DEPARMENT OF TRANSPORTATION
HARBORS DIVISION

HALE AWA KU MOKU BUILDING
79 SOUTH NIMITZ HIGHWAY
HONOLULU, HI 96813-4898

H.C. 50134 REPAIR DISTRICT OFFICE, HILO HARBOR, HAWAII, HAWAII

LEDGER REPAIR DETAIL

Sheet No.
S-11
Sheet 13 of 15

Plotted: Apr 26, 2016 - 11:53am

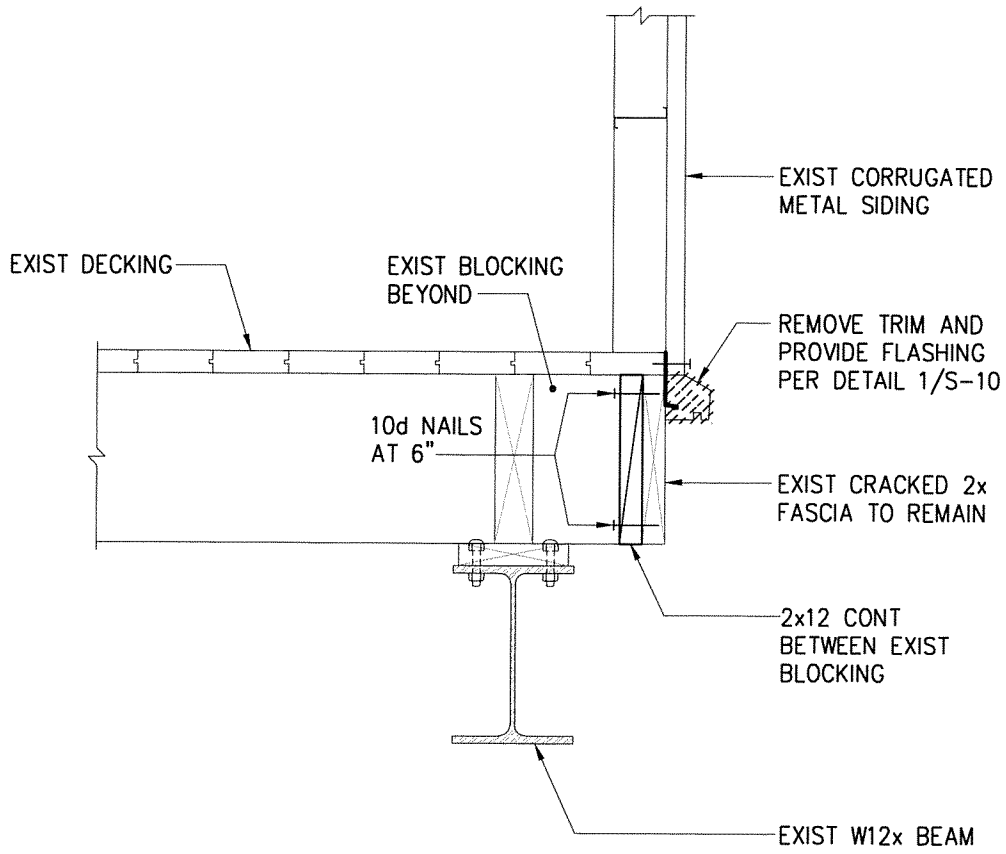

1 / S-12 CRACK FASCIA REPAIR DETAIL

SCALE: 1" = 1'-0"

1

STATE OF HAWAII
DEPARMENT OF TRANSPORTATION
HARBORS DIVISION

HALE AWA KU MOKU BUILDING
79 SOUTH NIMITZ HIGHWAY
HONOLULU, HI 96813-4898

H.C. 50134 REPAIR DISTRICT OFFICE, HILO HARBOR, HAWAII, HAWAII

CRACKED FASCIA REPAIR DETAIL

Sheet No.
S-12
Sheet 14 of 15

Plotted: Apr 26, 2016 - 11:54am

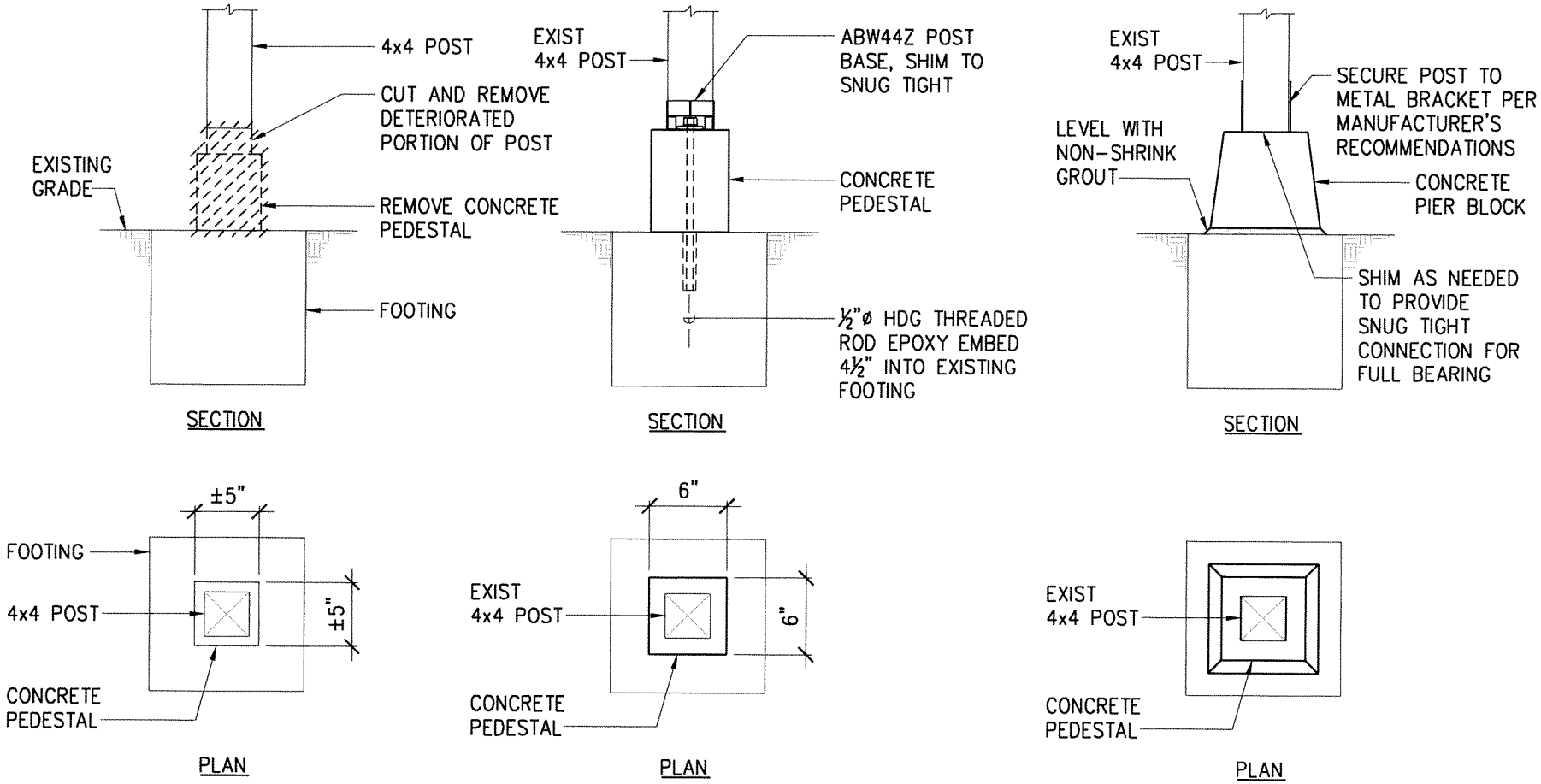

1 / S-13 POST BASE SPALL REPAIR DETAIL 1

SCALE: 1" = 1'-0"

NOTE:
AS AN ALTERNATE REPAIR CONTRACTOR MAY USE PRECAST CONCRETE PIER BLOCK WITH METAL BRACKET FOR CONCRETE PEDESTAL AS SHOWN.

STATE OF HAWAII
DEPARMENT OF TRANSPORTATION
HARBORS DIVISION

HALE AWA KU MOKU BUILDING
79 SOUTH NIMITZ HIGHWAY
HONOLULU, HI 96813-4898

H.C. 50134 REPAIR DISTRICT OFFICE, HILO HARBOR, HAWAII, HAWAII

POST BASE SPALL REPAIR DETAIL