DIVISION OF STATE PARKS

State of Hawaii
DEPARTMENT OF LAND AND NATURAL RESOURCES
ENGINEERING DIVISION
Honolulu, Hawaii

BOARD OF LAND AND NATURAL RESOURCES

Suzanne D. Case
Chairperson

CONTRACT SPECIFICATIONS AND PLANS

JOB NO. F27C793A
HEEIA STATE PARK
IMPROVEMENTS TO BANQUET HALL BUILDING
KANEOHE, OAHU, HAWAII

ARCHITECT:	ERSKINE ARCHITECTS, INC.
STRUCTURAL ENGINEER:	IWAMOTO & ASSOCIATES, LLC

MAY 2016

State of Hawaii
DEPARTMENT OF LAND AND NATURAL RESOURCES
ENGINEERING DIVISION
Honolulu, Hawaii

CONTRACT SPECIFICATIONS AND PLANS

JOB NO. F27C793A
HEEIA STATE PARK
IMPROVEMENTS TO BANQUET HALL BUILDING
KANEOHE, OAHU, HAWAII

Approved: _____
CURT A. COTTRELL
Administrator
Division of State Parks

Approved: _____
CARTY S. CHANG, P.E.
Chief Engineer
Engineering Division

MAY 2016

NOTICE TO BIDDERS iii

INFORMATION AND INSTRUCTIONS TO BIDDERS I-1

PROPOSAL P-1

SPECIAL PROVISIONS..... SP-1

DETAILED SPECIFICATIONS S-1

PLANS (Bound Separately)

DEPARTMENT OF LAND AND NATURAL RESOURCES INTERIM GENERAL CONDITIONS, DATED OCTOBER 1994 (Bound Separately)

NOTICE TO BIDDERS
(Chapter 103D, HRS)

COMPETITIVE BIDS for Job No. F27C793A Heeia State Park Improvements to Banquet Hall Building, Hawaii shall be submitted to the Department of Land and Natural Resources, Engineering Division on the specified date and time through the Hawaii State e-Procurement (HIePRO). HIePRO is accessible through the State Procurement Office website at www.spo.hawaii.gov.

The Department of Land and Natural Resources Interim General Condition, dated October 1994, as amended, and the General Conditions –AG008, latest revision shall be made part of the specifications.

The project is located at Heeia State Park, 46-465 Kamehameha Highway, Kaneohe, Oahu, Hawaii.

The work shall generally consist of the reroofing of the Banquet Hall building, along with associated structural repairs to the wood roof framing members.

Due to the nature of work contemplated, bidders must possess a valid State Contractor's license, classification "B".

A voluntary pre-bid conference and site visit will be held at the project site (Heeia State Park) on August 30th, 2016 at 9am.

The estimated cost of construction is $593,000.

The award of the contract, if it be awarded, will be subject to the availability of funds.

This project is subject to preference to Hawaii Products established by Section 103D, Hawaii Revised Statutes. The Hawaii Product List may be examined at the State Procurement Office website.

Since the estimated cost of construction is $250,000 or more, the apprenticeship agreement preference pursuant to Hawaii Revised Statutes §103-55.6 (ACT 17, SLH 2009) shall apply.

Should there be any questions, please refer to the HIePRO solicitation.

INFORMATION AND INSTRUCTIONS TO BIDDERS

CONTENTS

		Page
A	Project Location and Scope of Work	I-2
B	Proposals	I-2
C	General Conditions	I-2
D	Proposal Form	I-2
E	Omissions or Erasures	I-2
F	Notice of Intent to Bid and Questionnaire	I-2
G	Bid Security	I-2
H	Contractor's License Required	I-2
I	Irregular Bids	I-3
J	Withdrawal of Bids	I-3
K	Successful Bidder to File Performance and Payment Bonds	I-3
L	Number of Executed Original Counterparts of Contract Documents	I-3
M	Change Orders	I-3
N	Wages and Hours	I-3
O	Permits	I-3
P	Property Damage	I-4
Q	Time	I-4
R	Bidder's Responsibility to Provide Proper Superintendence	I-4
S	Liquidated Damages	I-4
T	Hiring of Hawaii Residents	I-4
U	Water and Electricity	I-5
V	Public Convenience and Safety	I-5
W	Work to be Done Without Direct Payment	I-5
X	As-Built Drawings	I-5
Y	Asbestos Containing Materials	I-5
Z	Worker Safety	I-5
AA	Toilet Facilities	I-6
BB	Signs	I-6
CC	Field Office for Department	I-6
DD	Quantities	I-6
EE	Other Health Measures	I-6
FF	Hawaii Business Requirement	I-6
GG	Compliance With §3-122-112 HAR	I-7

INFORMATION AND INSTRUCTIONS TO BIDDERS

A. PROJECT LOCATION AND SCOPE OF WORK: The project location and scope of work shall be as generally described in the Notice to Bidders.

B. PROPOSALS: Bidders shall submit their bid, including the completed proposal form, bid bond, and any other documents required by the solicitation as part of their bid through the State of Hawaii e-Procurement System (HIePRO). See Item D, PROPOSAL FORM.

C. GENERAL CONDITIONS: The Department of Land and Natural Resources Interim General Conditions dated October 1994, as amended, shall be made a part of these contract specifications and are referred to hereafter as the General Conditions.

D. PROPOSAL FORM: **The Bidders shall fill out and upload the electronic copy of the proposal form to the HIePRO website when submitting the bid. Bid Proposals shall not be mailed, faxed or delivered to the State, unless requested to do so after the designated closing date. The successful Bidder shall fill out and print a hard copy of the proposal form, sign and submit the form with the contract award package.**

E. OMISSIONS OR ERASURES: Any proposal which contains any omission or erasure or alteration not properly initialed, or conditional bid, or other irregularity may be rejected by the Board of Land and Natural Resources (Board).

F. NOTICE OF INTENT TO BID AND QUESTIONNAIRE:
A Notice of Intent to Bid is not required for this project. In compliance with HRS Section 103D-310, the lowest responsive and responsible bidder may be required to complete a questionnaire. When requested by the State, the completed questionnaire shall be submitted to the Chief Engineer for evaluation. Failure to furnish the requested information within the time allowed may be grounds for a determination of non-responsibility, in accordance with HRS Section 103D-310 and HAR Section 3-122-108.

G. BID SECURITY: A bid security will be furnished by each bidder as provided in sub-section 2.7 of the General Conditions. The successful bidder's bid security will be retained until Contract execution and furnished a performance and payment bond in an amount equal to one hundred percent (100%) of the total Contract price, including an amount estimated to be required for extra work, is furnished.

The Board reserves the right to hold the bid securities of the four lowest bidders until the successful bidder has entered into a contract and has furnished the required performance bond. All bid securities will be returned in accordance with sub-section 3.5 of the General Conditions.

Should the successful bidder fail to enter into a contract and furnish a satisfactory performance bond within the time stated in the proposal, the bid security shall be forfeited as required by law.

H. CONTRACTOR'S LICENSE REQUIRED: The Board will reject all bids received from contractors who have not been licensed by the State Contractors License Board in accordance

with Chapter 444, HRS; Title 16, Chapter 77, Hawaii Administrative Rules; and statutes amendatory thereto.

I. IRREGULAR BIDS: No irregular bids or propositions for doing the work will be considered by the Board.

J. WITHDRAWAL OF BIDS: No bidder may withdraw his bid between the time of the opening thereof and the award of contract.

K. SUCCESSFUL BIDDER TO FILE PERFORMANCE AND PAYMENT BONDS: The successful bidder will be required to file performance and payment bonds each; in the amount equal to the total contract price, including amounts estimated to be required for extra work, as provided in sub-section 3.6 of the General Conditions.

L. NUMBER OF EXECUTED ORIGINAL COUNTERPARTS OF CONTRACT DOCUMENTS: If requested by the Board, six copies of the Contract, performance and payment bonds shall be executed.

M. CHANGE ORDERS: No work of any kind in connection with the work covered by the plans and specifications shall be considered as change order work, or entitle the Contractor to extra compensation, except when the work has been ordered in writing by the Chief Engineer (Engineer) and in accordance with sub-section 4.2 of the General Conditions.

The Contractor shall clearly identify and inform the Engineer in writing of any deviations from the contract documents at the time of submission and shall obtain the Engineer's written approval to the specified deviation prior to proceeding with any work.

N. WAGES AND HOURS: In accordance with sub-sections 7.3 to 7.9 of the General Conditions relative to hours of labor, minimum wages and overtime pay, the current minimum wage rates promulgated by the Department of Labor and Industrial Relations (DLIR) shall be paid to the various classes of laborers and mechanics engaged in the performance of this contract on the job site. The minimum wages shall be increased during the performance of the contract in an amount equal to the increase in the prevailing wages for those kinds of work as periodically determined by the DLIR.

The Department of Land and Natural Resources will not recognize any claim for additional compensation because of the payment by the Contractor of any wage rate in excess of the said minimum wage rates. The possibility of wage increase is one of the elements to be considered by the Contractor in determining his bid, and will not, under any circumstances, be considered as the basis of a claim against the Department under this Contract.

No work shall be done on Saturdays, Sundays, legal State holidays, and/or in excess of eight (8) hours each day without the written consent of the Engineer. Should permission be granted to work at such times, the Contractor shall pay for all inspection administrative costs thereof. No work shall be done at night unless authorized by the Engineer.

O. PERMITS: The State will process permit applications whenever possible, and the Contractor shall procure the pre-processed permits and pay the required fees. If permit applications are not processed by the State, the Contractor shall process the permit applications, permits and

licenses, and pay all charges and fees. In all cases, the Contractor shall give all notices necessary and incident to the due and lawful prosecution of the work.

P. PROPERTY DAMAGE: It shall be the responsibility of the contractor to respect State property and to prevent damage to existing improvements. The Contractor will be responsible for damages resulting from construction operations. Immediately upon discovery, the Contractor shall repair such damage to the satisfaction of the Engineer.

All trees and shrubbery outside the excavation, embankment or construction limits shall be fully protected from injury.

Q. TIME: The time of completion is specified in the Proposal. It is the Board's intention to insist the Contractor diligently prosecute the work to completion within the specified time.

Prospective bidders are reminded that the State has the option to proceed with or abandon a project depending on whether the project can be completed for occupancy in the specified time.

It is the bidder's responsibility to check the availability of all materials before bidding. The bidder shall select sub-contractors and suppliers who can warrant availability and delivery of all specified or qualified materials to assure project completion within the specified time.

The successful bidder must assume all risks for completing the project by the specified date. There shall be no extension of time for any reason except for delays caused by acts of God, labor disputes involving unions, or actions of the State. If for any reason the project falls behind schedule, the Contractor shall at its own cost, take necessary remedial measures to get the project back on schedule, i.e., working overtime, air freighting all materials, etc. In addition, if the Contractor fails to fully complete the project by the completion date, Contractor will be required to make the facility usable at its own cost.

R. BIDDER'S RESPONSIBILITY TO PROVIDE PROPER SUPERINTENDENCE: The successful low bidder shall designate in writing to the Engineer the name of its authorized superintendent (Superintendent), who will be present at the job site whenever any work is in progress. The Superintendent shall be responsible for all work, receiving and implementing instructions from the Engineer in a timely manner. The cost for superintendence shall be considered incidental to the project.

If the Superintendent is not present at the site of work, the Engineer shall have the right to suspend the work as described under sub-section 5.5 c. and 7.20 - Suspension of Work of the General Conditions.

S. LIQUIDATED DAMAGES: Liquidated damages in the amount specified in the Proposal will be assessed for each and every calendar day from and after the expiration of the time period stated in the Contract for the completion of the project.

T. HIRING OF HAWAII RESIDENTS: The Contractor shall comply with Act 68, SLH 2010, in the performance and for the duration of this contract. The Contractor shall ensure that Hawaii residents compose not less than eighty percent of the workforce employed to perform the contract work on the project. The eighty percent requirement shall be determined by

dividing the total number of hours worked on the contract by Hawaii residents, by the total number of hours worked on the contract by all employees of the Contractor in the performance of the contract. The hours worked by any Subcontractor of the Contractor shall count towards the calculation for this section. The hours worked by employees with shortage trades, as determined by the Department of Labor and Industrial Relations (DLIR), shall not be included in the calculation for this section.

The requirements shall apply to any subcontract of $50,000 or more in connection with the Contractor, that is, such Subcontractors must also ensure that Hawaii residents compose not less than eighty percent of the Subcontractor's workforce used to perform the subcontract.

U. WATER AND ELECTRICITY: The Contractor shall make all necessary arrangements and pay all expenses for water and electricity used in the construction of this project.

V. PUBLIC CONVENIENCE AND SAFETY: The Contractor shall conduct construction operations with due regard to the convenience and safety of the public at all times. No materials or equipment shall be stored where it will interfere with the safe passage of public traffic. The Contractor shall provide, install, and maintain in satisfactory condition, all necessary signs, flares and other protective facilities and shall take all necessary precautions for the protection of the work and the convenience and safety of the public. The Engineer shall have the right to suspend the performance of the work in accordance with sub-section 7.20 - Suspension of Work of the General Conditions.

W. WORK TO BE DONE WITHOUT DIRECT PAYMENT: Whenever the contract that the Contractor is to perform work or furnish materials of any kind for which no price is fixed in the contract, it shall be understood that the Contractor shall perform such work or furnish said materials without extra charge or allowance or direct payment of any sort. The cost of performing such work or furnishing said material is to be included by the Contractor in a unit price for the appropriate item unless it is expressly specified that such work or material is to be paid for as extra work.

X. AS-BUILT DRAWINGS: As-built drawings, the intent of which is to record the actual in-place construction so that any future renovations or tie-ins can be anticipated accurately, shall be required. All authorizations given by the Engineer to deviate from the plans shall be drawn on the job site plans. All deviations from alignments, elevations and dimensions which are stipulated on the plans shall be recorded on the as-built drawings. Final as-built drawings shall be submitted to the Engineer for review and approval. After the Engineer approves the as-built drawings, the contractor shall submit an electronic copy in Adobe PDF format on CD ROM.

Y. ASBESTOS CONTAINING MATERIALS: The use of asbestos containing materials or equipment is prohibited. The Contractor shall insure that all materials and equipment incorporated in the project are asbestos-free

Z WORKER SAFETY: The Contractor shall provide, install and maintain in satisfactory condition all necessary protective facilities and shall take all necessary precautions for the protection and safety of its workers in accordance with the Occupational Safety and Health Standards for the State of Hawaii. The Engineer shall have the right to suspend the performance of the work in accordance with sub-section 7.20 - Suspension of Work of the

General Conditions.

AA. TOILET FACILITIES: All toilet facilities constructed at the project site shall be in accordance with the Public Health Regulations of the State Department of Health (DOH). All necessary precautions shall be observed at the project site. The use of sanitary facilities shall be strictly enforced and workers violating these provisions shall be promptly discharged.

BB. SIGNS: Whenever the project involves closing or obstructing any public thoroughfare, the Contractor shall provide traffic signs conforming to the applicable provisions of the current edition of the "Manual on Uniform Traffic Control Devices for Streets and Highways", published by the Federal Highway Administration as directed by the Engineer for the purpose of diverting or warning traffic prior to the construction area. All traffic signs shall bear proper wording stating thereon the necessary information as to diverting or warning traffic.

When indicated in the Proposal, the Contractor shall provide a project sign, size 4'-0" x 7'-0" to be placed as directed by the Engineer. The sign shall be constructed in accordance with Section 01581 - Project Sign of these specifications and approved by the Engineer. All wording, type and size of lettering and color selection shall be as specified in these specifications or as approved by the Engineer.

All signs shall be kept neat and clean, and properly erected at all times.

CC. FIELD OFFICE AREA FOR DEPARTMENT: When indicated in the Proposal, the Contractor shall provide a housed working area of at least 100 square feet adjacent to the Contractor's office for the Department's use. This area will be used by the Engineer to perform tests and to store equipment. As a minimum, the field office shall include the following: standard sized office desk and chair, lighting, ventilation, window-type air conditioning rated at 5,000 BTU, door and window with locking hardware, electrical outlets, and working communications facilities (a cellular telephone is acceptable). The Department will pay for all long distance toll charges made by the Engineer.

DD. QUANTITIES: All bids will be compared on the basis of quantities of work to be done as shown in the Proposal; the quantities shown in the Unit Price items are estimated, being given as a basis for comparison of bids. The Board reserves the right to increase or decrease the quantities given under the items or delete items entirely as may be required during the progress of the work.

EE. OTHER HEALTH MEASURES: Forms of work site exposure or conditions which may be detrimental to the health or welfare of workers or of the general public shall be eliminated or reduced to safe levels as required by the DOH codes, standards, and regulations. Suitable first aid kits and a person qualified to render first aid, as specified in the DOH regulations, shall be provided at all times when work is scheduled.

FF. HAWAII BUSINESS OR COMPLIANT NON-HAWAII BUSINESS REQUIREMENT: Bidders (Contractors) shall be incorporated or organized under the laws of the State or be registered to do business in the State as a separate branch or division that is capable of fully performing under the contract, as stipulated in §3-122-112 HAR.

GG. COMPLIANCE WITH §3-122-112 HAR:

As a condition for award of the contract and as proof of compliance with the requirements of 103D-310(c) HRS, the apparent low bidder shall furnish the required documents to the Department. If the valid required certificates are not submitted on a timely basis for award of a contract, a bidder otherwise responsive and responsible may not receive the award. Bidder is responsible to apply for and submit the following documents to the Department.

A. TAX CLEARANCE REQUIREMENTS (HRS Chapter 237): Bidder shall obtain a tax clearance certificate from the Hawaii State Department of Taxation (DOTAX) and the Internal Revenue Service (IRS). The certificate is valid for six months from the most recently approved stamp date on the certificate; the certificate must be valid on the date received by the Department.

B. Department of Labor (DLIR) "**Certificate of Compliance**". (HRS Chapter 383 - Unemployment Insurance, Chapter 386 - Workers' Compensation, Chapter 392 - Temporary Disability Insurance, and 393 – Prepaid Health Care): Bidder shall obtain a certificate of compliance from the Hawaii State Department of Labor and Industrial relations (DLIR). The certificate is valid for six months from the date of issue; certificates must be valid on the date received by the Department.

C. Department of Commerce and Consumer Affairs (DCCA), Business Registration Division (BREG) "**Certificate of Good Standing**". Bidder shall obtain a certificate of good standing issued by the Department of Commerce and Consumer Affairs (DCCA), Business Registration Division (BREG). The certificate of good standing is valid for six months from the date of issue; certificates must be valid on the date received by the Department.

Alternately, instead of separately applying for these certificates at the various state agencies, bidder may choose to use the Hawaii Compliance Express (HCE), which allows businesses to register online through a simple wizard interface at http://vendors.ehawaii.gov to acquire a "Certificate of Vendor Compliance" indicating the bidder's status is compliant with the requirements of §103D-310(c), HRS, and shall be accepted for contracting and final payment purposes. Bidders that elect to use the new HCE services will be required to pay an annual fee of $15.00 to the Hawaii Information Consortium, LLC (HIC). Bidders choosing not to participate in the HCE program will be required to provide the paper certificates as instructed in the previous paragraphs.

PROPOSAL

FOR

DEPARTMENT OF LAND AND NATURAL RESOURCES
ENGINEERING DIVISION
State of Hawaii

JOB NO. F27C793A
HEEIA STATE PARK
IMPROVEMENTS TO BANQUET HALL BUILDING
KANEOHE, OAHU, HAWAII

_____, 20__

Chief Engineer
Engineering Division
Department of Land and Natural Resources
State of Hawaii
Honolulu, Hawaii

Dear Sir:

The undersigned, having carefully examined the local conditions and all available records and information covering conditions which may affect the cost of the work to be performed, and having carefully examined the Plans and Specifications, and other contract documents, hereby proposes to furnish and pay for all materials, tools, equipment, labor and other incidental work necessary to reroof the Banquet Hall building along with performing associated structural repairs to the wood roof framing members, as required or called for in this Proposal, all according to the true intent and meaning of the Notice to Bidders, Information and Instructions to Bidders, Proposal, Detailed Specifications, Interim General Conditions, Plans, and any and all addenda for:

JOB NO. F27C793A
HEEIA STATE PARK
IMPROVEMENTS TO BANQUET HALL BUILDING
KANEOHE, OAHU, HAWAII

on file in the office of the Engineering Division for the TOTAL BASE BID (Items 1 to 23) of:

_____

_____Dollars ($_____)
and will fully complete all work under this contract within 180 consecutive calendar days from the date of written notice to proceed, including date of said order, said total sum being itemized on the following pages.

PROPOSAL

Item No.	Quantity	Unit	Description	Unit Price	Total
1.		LS	Demolition, Hauling & Disposal	LS	$_____
2.		LS	Wood Roof Rafter Framing Repairs	LS	$_____
3.		LS	Structural Steel Framing	LS	$_____
4.		LS	Wood Roof Framing Repairs	LS	$_____
5.		LS	4x Wood Roof Purlin Repairs	LS	$_____
6.		LS	2x Wood Roof Blocking	LS	$_____
7.		LS	Plywood Roof Sheathing	LS	$_____
8.		LS	Wood Roof Decking	LS	$_____
9.		LS	Wood Fascia and Miscellaneous Exterior Wood Roof Framing	LS	$_____
10.		LS	Asphalt Shingle Roofing	LS	$_____
11.		LS	TPO Sheet Roofing	LS	$_____
12.		LS	Fluid Applied Roof Coating	LS	$_____
13.		LS	Sheet Metal Flashing	LS	$_____
14.		LS	Gutters and Downspouts	LS	$_____
15.		LS	Gable End Framing Repairs and Windows	LS	$_____
16.		LS	Miscellaneous Interior Wood Framing	LS	$_____
17.		LS	Miscellaneous Painting	LS	$_____
18.		LS	Electrical Work – Removal & Reinstallation	LS	$_____
19.	1	EA	Project Sign, in place complete	$_____	$_____

Variable Quantities Unit Prices:

Item No.	Quantity	Unit	Description	Unit Price	Subtotal Cost
20.	100	SF	Unit Price No. 1: Remove damaged 2x roof decking and install new 2x roof decking	$_____	$_____
21.	50	LF	Unit Price No. 2: Remove damaged 2x purlins and install new 2x purlins over kitchen area	$_____	$_____
22.	48	LF	Unit Price No. 3: Remove damaged 4x roof purlins and install new 4x roof purlins over banquet hall area	$_____	$_____

Subtotal Base Bid (Items 1-22) $_____

23.		LS	Mobilization and Demobilization (not to exceed 10% of the subtotal base bid)	$_____	$_____

Total Base Bid (Items 1-23) $_____

HAWAII PRODUCTS PREFERENCE AND/OR USE OF HAWAII PRODUCTS

In accordance with Act 175, SLH 2009, the Hawaii products preference is applicable to this solicitation. Bidders offering a Hawaii product ("HP") shall identify the HP in the table below.

Persons desiring to qualify their product(s) not currently on the Hawaii Product List, shall complete Form SPO-38, *Certification for Hawaii Product Preference*, and submit the completed form no later than the deadline specified in the procurement notice and solicitation. The responsibility for certification and qualification shall rest upon the person requesting the preference. One form shall be completed and submitted for each product. Form SPO-38 is available at http://hawaii.gov/spo/

For the purpose of selecting the low bid when a solicitation contains both HP and non-HP, the price offered for a HP item shall be decreased by subtracting 10% for the class I or 15% for the class II HP item(s) offered. The lowest total offer, taking the preference into consideration, shall be awarded the contract, unless the offer provides for additional award criteria. The contract amount of any contract awarded, however, shall be the amount of the price offered, exclusive of the preferences.

In the event of any change that materially alters the bidder's ability to supply the Hawaii product(s), the bidder shall immediately notify the procurement officer in writing and the parties shall enter into discussions for the purpose of revising the contract or terminating the contract for convenience.

Item No.	Pre-Approved Hawaii Product Description & Manufacturer	Class (I or II)	Quantity	Unit Measure	Unit Price	Total Price
1.	*[Product Description, Manufacturer Name]*	(I)				
2.						
3.						
4.						

RECYCLED PRODUCTS PREFERENCE

This project allows a 10% price preference for recycled products in accordance with HRS 103D-1005. Please indicate your recycled or non-recycled product by indicating its cost FOB jobsite unloaded in the schedule below, including applicable General Excise & Use Taxes.

DESCRIPTION	RECYCLED PRODUCT COST	NONRECYCLED PRODUCT COST
_____	$_____	$_____
_____	$_____	$_____
_____	$_____	$_____
_____	$_____	$_____

The bidder requesting a recycled product preference shall also complete and submit the form "CERTIFICATION OF RECYCLED CONTENT" as shown in the Interim General Conditions and provide all supporting information with this proposal. Additional information may be requested to qualify a product.

The following definitions are applicable to the CERTIFICATION OF RECYCLED CONTENT form:

"Post-consumer recovered material" means any product used by a consumer, including a business that purchases the material, that has served its intended end use, and that has been separated or diverted from the solid waste stream for the purpose of use, reuse, or recycling.

"Product" includes materials, manufactures, supplies, merchandise, goods, wares, and foodstuffs.

"Recovered material" means waste material and by-products that have been separated, diverted, or removed from the solid waste stream after a manufacturing process for the purpose of use, reuse, or recycling. Recovered material does not include those materials and by-products that are generated and normally reused on-site or within original manufacturing processes (such as mill broke, in the case of paper products).

"Recycled content" means the percentage of a product composed of recovered material, or post-consumer recovered material, or both.

"Recycled product" means a product containing recovered material, or post-consumer recovered material, or both.

The bidder agrees that preference for recycled products shall be taken into consideration to determine the low bidder in accordance with said Section and the rules promulgated, however, the award of contract will be in the amount of the bid offered exclusive any preference.

APPRENTICESHIP AGREEMENT PREFERENCE

1. If applicable to this project, any bidder seeking the preference must be a party to an apprenticeship agreement registered with the State Department of Labor and Industrial Relations (DLIR) at the time the bid is submitted for each apprenticeable trade the bidder will employ to construct the project. "Employ" means the employment of a person in an employer-employee relationship.

   a. The apprenticeship agreement shall be registered with the DLIR and conform to the requirements of Hawaii Revised Statutes Chapter 372.

   b. Subcontractors do not have to be a party to an apprenticeship agreement for the bidder to obtain preference.

   c. The bidder is not required to have apprentices in its employ at the time the bid is submitted to qualify for the preference.

2. A bidder seeking the preference must state the apprenticeable trade the bidder will employ for each trade to be employed to perform the work by submitting a completed signed original *Certification Form 1* verifying participation in an apprenticeship program registered with DLIR. "Apprenticeable trade" shall have the same meaning as "apprenticeable occupation" pursuant to Hawaii Administrative Rules (HAR) §12-30-5.

   a. The *Certification Form 1* shall be authorized by an apprenticeship sponsor listed on the DLIR list of registered apprenticeship programs. "Sponsor" means an operator of an apprenticeship program and in whose name the program is approved and registered with the DLIR pursuant to HAR §12-30-1.

   b. The authorization shall be an original signature by an authorized official of the apprenticeship sponsor.

   c. The completed signed original *Certification Form 1* for each trade must be submitted with the bid. Previous certifications shall not apply.

   d. When filling out the *Certification Form 1*, the name of Apprenticeable Trade and Apprenticeship Sponsor must be the same as recorded in the List of Construction Trades in Registered Apprenticeship Programs that is posted on the DLIR website. "Registered apprenticeship program" means a construction trade program approved by the DLIR pursuant to HAR §12-301 and §12-30-4.

   e. The *Certificate Form 1* and the List of Construction Trades in Registered Apprenticeship Programs is available on the DLIR website at: http://hawaii.gov/labor/wdd.

3. Upon receiving the *Certification Form 1*, the Procurement Officer will verify that the apprenticeship program is on the List of Construction Trades in Registered Apprenticeship Programs and that the form is signed by an authorized official of the Apprenticeship Program Sponsor. If the programs and signature are not confirmed by the DLIR, the bidder will not qualify for the preference.

4. If the bidder is certified to participate in an apprenticeship program for each trade which will be

employed by the bidder for the project, a preference will be applied to decrease the bidder's bid amount by five percent (5%) for evaluation purposes.

5. Should the bidder qualify for other preferences (e.g. Hawaii Products), all applicable preferences shall be applied to the bid price.

CONTRIBUTIONS BY STATE AND COUNTY CONTRACTORS PROHIBITED

Contractors are hereby notified of the applicability of Section 11-355, HRS, which states that campaign contributions are prohibited from specified State or county government contractors during the term of the contract if the contractors are paid with funds appropriated by a legislative body.

CONDITION OF AWARD

It is understood that the award of the contract will be made on the basis of the lowest responsible Total Base Bid (Items 1 to 23) selected by the Board of Land and Natural Resources. Write the total of bid items 1 to 23 on page P-1.

It is understood and agreed that the Board of Land and Natural Resources reserves the right to reject any and/or all bids and waive any defects when, in the Board's opinion, such rejection or waiver will be for the best interest of the State of Hawaii.

In the event all bids exceed available funds certified by the appropriate fiscal officer, the head of the purchasing agency responsible for the procurement in question is authorized in situations where time or economic considerations preclude resolicitation of work of a reduced scope to negotiate an adjustment of the bid price, including changes in the bid requirements, with the low responsible and responsive bidder, in order to bring the bid within the amount of available funds. It is understood and agreed upon that the head of the purchasing agency may delete a portion or all of any item(s) in the proposal at the stated unit or lump sum price as necessary to stay within the available funding. The bidder is responsible to make an earnest effort to represent the actual cost of each item, including all materials, labor, equipment, overhead and profit in their bid proposal to preclude claims of anticipated profit or loss of profit because of an unbalanced bid proposal.

It is also understood that if a mutually agreeable cost for the reduced scope of work necessitated by a lack of available funds cannot be agreed upon between the bidder and the head of the purchasing agency within 14 calendar days after the bid opening, then the bid may be rejected in the best interest of the purchasing agency, and the head of the purchasing agency may negotiate in progressive order (lowest to highest) with the next lowest responsible and responsive bidder.

It is also understood and agreed that the award of the contract shall be conditioned upon funds being made available for this project and further upon the right of the Board of Land and Natural Resources to hold all bids received for a period of sixty (60) days from the date of the opening thereof, unless otherwise required by law, during which time no bid may be withdrawn.

It is also understood that Notice to Proceed may be delayed up to one (1) year after the bid opening date, and that no additional compensation will be provided for any claim for escalation or delay for issuance of Notice to Proceed on or before that date.

It is also understood and agreed that the quantities given herewith are approximate only and are subject to increase or decrease, and that the undersigned will perform all quantities of work as either increased or decreased, in accordance with the provisions of the Contract Specifications.

It is also understood and agreed that the estimated quantities shown for the items for which a UNIT PRICE is asked in this Proposal are only for the purpose of comparing on a uniform basis, bids offered for the work under this contract, and the undersigned agrees that he is satisfied with and will at no time, dispute said estimated quantities as a means of claims for anticipated profit or loss of profit, because of a difference between the quantities of the various classes of work done or the materials and equipment installed, and the said estimated quantities. On UNIT PRICE bids, payment will be made only for the actual number of units incorporated into the finished project at the contract UNIT PRICE.

After the proposals are opened and read, the figures will be extended and/or totaled in accordance with the bid prices of the acceptable proposals and the totals will be compared. In the comparison of bids, words written in the proposal shall govern over figures and unit prices will govern over totals. Until the

award of the contract, however, the right will be reserved to reject any and all proposals and to waive any defects or technicalities as may be deemed best for the interest of the State.

It is also understood and agreed that liquidated damages in the amount of Two Hundred and no/100 Dollars ($ 200.00) for each and every calendar day in excess thereof prior to completion of the contract shall be withheld from payments due to the Contractor.

It is also understood and agreed that if this bid is accepted, the successful bidder must enter into and execute a contract with the Board of Land and Natural Resources and furnish a Performance and Payment Bond, as required by law. These bonds shall conform to provisions of Section 103D-324 and 325, Hawaii Revised Statutes and any law applicable hereto.

It is also understood and agreed that the successful bidder will provide all necessary labor, materials, tools, equipment, and other incidentals necessary to do all the work and furnish all the materials specified in the contract in the manner and time herein prescribed, and according to the requirements of the Engineer as therein set forth.

It is understood that by submitting this proposal, the undersigned is declaring that his firm has not been assisted or represented on this matter by an individual who has, in a State capacity, been involved in the subject matter of this contract in the past two years.

It is understood that by submitting this proposal in accordance with HAR 3-122-192, the undersigned is declaring that the price submitted is independently arrived without collusion.

It is also understood that by submitting this proposal, a Certification for Safety and Health Programs for bids in excess of $100,000 (in accordance with HRS 396-18), the undersigned certifies that his organization will have a written safety and health plan for this project that will be available and implemented by the Notice to Proceed date of this project. Details of the requirements of this plan may be obtained from the Department of Labor and Industrial Relations, Occupational, Safety and Health Division (HIOSH).

It is further understood and agreed that the successful bidder shall comply with paragraph 3.1.a "SUBCONTRACTING" of the General Provisions which requires that the contractor shall perform with his own organization and with the assistance of workmen under his immediate superintendence, work of a value not less than twenty percent (20%) of the value of all work embraced in the Contract, except that certain contract items of work, if specifically referred to in the special provisions, will be exempted from said twenty percent requirement.

Compliance with §103-310 HRS. As a condition of award all bidders shall comply with all laws governing entities doing business in the State, including Chapter 237 HRS (general excise tax); Chapter 383 HRS (employment security – unemployment insurance); Chapter 386 HRS (workers compensation); Chapter 392 HRS (temporary disability insurance); and Chapter 393 HRS (pre-paid health care), and shall produce all documents to the State (DLNR, Engineering Division) required to demonstrate compliance with these subsections. Any bidder making a false affirmation or certification under this subsection shall be suspended and may be debarred from further offerings or awards pursuant to §103D-702 HRS.

RECEIPT OF ADDENDA

The bidder also acknowledges receipt of any and all addenda issued by the Engineering Division, by recording the date of receipt of the respective addenda in the space provided below:

Addendum	Date Received	Addendum	Date Received
No. 1	_____	No. 5	_____
No. 2	_____	No. 6	_____
No. 3	_____	No. 7	_____
No. 4	_____	No. 8	_____

It is understood that failure to receive any such addendum shall not relieve the Contractor from any obligation under this Proposal as submitted.

It is also understood and agreed that if this Proposal is accepted and the undersigned should fail or neglect to contract as aforesaid, the Board may determine that the bidder has abandoned the Contract, and thereupon, forfeiture of the security accompanying his proposal shall operate and the same shall become the property of the Board.

JOINT CONTRACTORS OR SUBCONTRACTORS TO BE ENGAGED ON THIS PROJECT

The Bidder agrees that the following is a complete listing of all joint contractors or subcontractors covered under Chapter 444, Hawaii Revised Statutes (HRS), who will be engaged by the Bidder on this project to perform the required work indicated pursuant to Section 103D-302, HRS. It is the sole responsibility of the contractor to review the requirements of this Project and determine the appropriate licenses that are required to complete the Project. The Bidder certifies that the completed listing of joint contractors or subcontractors fulfills the requirements for the project and the Bidder, together with the listed subcontractors or joint contractors have all the specialty contractor's licenses to complete the work, except as provided for in HRS §103D-302(b). Failure of the Bidder to comply with this requirement may be just cause for rejection of the bid.

"A" General Engineering Contractors and "B" General Building Contractors are reminded that due to the Hawaii Supreme Court's January 28, 2002 decision in Okada Trucking Co., Ltd. v. Board of Water Supply, et al., 97 Haw. 450 (2002), they are prohibited from undertaking any work, solely or as part of a larger project, which would require the general contractor to act as a specialty contractor in any area in which the general contractor has no license. Although the "A" and "B" contractor may still bid on and act as the "prime" contractor on an "A" or "B" project (See, *HRS §444-7 for the definitions of an "A" and "B" project.*), respectively, the "A" and "B" contractor may only perform work in the areas in which they have the appropriate contractor's license (*An "A" or "B" contractor obtains "C" specialty contractor's licenses either on its own, or automatically under HAR § 16-77-32*). The remaining work must be performed by appropriately licensed entities.

General Engineering "A" Contractors automatically have these "C" specialty contractor's licenses: C-3, C-9, C-10, C-17, C-24, C-31a, C-32, C-35, C-37a, C-37b, C-38, C-43, C-49, C-56, C-57a, C-57b and C-61.

General Building "B" Contractors automatically have these "C" specialty contractor's licenses: C-5, C-6, C-10, C-12, C-24, C-25, C-31a, C-32a, C-42a and C-42b.

In completing the Joint Contractors or Subcontractors List, describe the specialty contractor's nature and scope of work to be performed for this project and provide the complete firm name of the joint contractor or subcontractor in the respective columns. If the Bidder is a general contractor providing the work of a required specialty contractor, whose license is not automatically held pursuant to HAR 16-77-32, fill in the Bidder's (general contractor's) name and nature and scope of work to be performed on this project.

List only one joint contractor or subcontractor per required specialty contractor's classification, unless within the same specialty, the work of each joint contractor or subcontractor can be described so that there is no overlap in work descriptions.

If a contractor's license is required by law for the performance of the work which is called for in this bid, the bidder and all subcontractors must have the required license before the submission of the bidder's proposal in the case of a non-federal aid project, and for federal-aid projects, the bidder must have the required license prior to the award of the project and all subcontractors prior to the start of the subcontracted work.

COMPLETE FIRM NAME OF JOINT CONTRACTOR OR SUBCONTRACTOR	NATURE AND SCOPE OF WORK TO BE PERFORMED

Enclosed herewith is a:

1.	Surety Bond (*1)	)	
2.	Legal Tender (*2)	)	
3.	Cashier's Check (*3)	)	
4.	Certificate of Deposit (*3)	)	in the
5.	Certified Check (*3)	)	amount
6.	Official Check (*3)	)	of
7.	Share Certificate (*3)	)	
8.	Teller's Check (*3)	)	
9.	Treasurer's Check (*3)	)	

(Cross Out Those Not Applicable)

_____

_____Dollars ($_____)

as required by law.

Respectfully submitted,

_____
Name of Company, Joint Venture
or Partnership

_____
Contractor's License No.

By _____
Signature (*4)

Title _____
Print Name _____
Date _____
Address _____
_____
Telephone No. _____

E-Mail Address _____

NOTES:

1. Surety bond underwritten by a company licensed to issue bonds in this State;

2. Legal tender; or

3. A certificate of deposit; share certificate; or cashier's, treasurer's, teller's, or official check drawn by, or a certified check accepted by, and payable on demand to the State by a bank, a savings institution, or credit union insured by the Federal Deposit Insurance Corporation or the National Credit Union Administration.

   A. These instruments may be utilized only to a maximum of $100,000.

   B. If the required security or bond amount totals over $100,000, more than one instrument not exceeding $100,000 each and issued by different financial institutions shall be accepted.

4. Please attach to this page evidence of the authority of this officer to submit bids on behalf of the Company and also the names and residence addresses of all officers of the Company.

5. Fill in all blank spaces with information asked for or bid may be invalidated. PROPOSAL MUST BE INTACT, MISSING PAGES MAY INVALIDATE YOUR BID.

End of Proposal

SPECIAL PROVISIONS

Amend INTERIM GENERAL CONDITIONS, dated October 1994, as follows:

Section 2 – Proposal Requirements and Conditions

1. **AMEND** Section 2.1 Qualification of Bidder with the following:

Written Notice of Intent to Bid or Offer: A written Notice of Intent to Bid is not required for the Solicitation.

Standard Qualification Questionnaire: Bidders may be required to complete a standard qualifications questionnaire. When requested, the information shall be furnished within two working days or longer at the discretion of the Engineer. Failure to furnish the requested information within the time allowed may be grounds for a determination of non-responsibility, in accordance with HRS Section 103D-310 and HAR Section 3-122-108.

Hawaii Business or Compliant Non-Hawaii Business Requirement: Bidders shall be incorporated or organized under the laws of the State or be registered to do business in the State as a separate branch or division that is capable of fully performing under the contract, as stipulated in §3-122-112 HAR. A certified letter is not required prior to bid opening.

Compliance with §3-122-112 HAR: As a condition for award of the contract and as proof of compliance with the requirements of 103D-310(c) HRS, the apparent low bidder shall furnish the required documents to the Department. If the valid required certificates are not submitted on a timely basis for award of a contract, a bidder otherwise responsive and responsible may not receive the award. Bidder is responsible to apply for and submit the following documents to the Department.

A. Tax Clearance (HRS Chapter 237): Bidder shall obtain a tax clearance certificate from the Hawaii State Department of Taxation (DOTAX) and the Internal Revenue Service (IRS). The certificate is valid for six months from the most recently approved stamp date on the certificate; the certificate must be valid on the date received by the Department.

B. Department of Labor (DLIR) "Certificate of Compliance". (HRS Chapter 383 - Unemployment Insurance, Chapter 386 - Workers' Compensation, Chapter 392 - Temporary Disability Insurance, and 393 – Prepaid Health Care): Bidder shall obtain a certificate of compliance from the Hawaii State Department of Labor and Industrial relations (DLIR). The certificate is valid for six months from the date of issue; certificates must be valid on the date received by the Department.

C. Department of Commerce and Consumer Affairs (DCCA), Business Registration Division (BREG) "Certificate of Good Standing". Bidder shall obtain a certificate of good standing issued by the Department of Commerce and Consumer Affairs (DCCA), Business Registration Division (BREG). The certificate of good standing is valid for six months from the date of issue; certificates must be valid on the date received by the Department.

Hawaii Compliance Express. Alternately, instead of separately applying for these certificates at the various state agencies, bidder may choose to use the Hawaii Compliance Express (HCE), which allows businesses to register online through a simple wizard interface at http://vendors.ehawaii.gov to acquire a "Certificate of Vendor compliance" indicating that bidder's status is compliant with requirements of §103D-310(c), HRS, shall be accepted for contracting and final payment purposes.
Bidders that elect to use the new HCE services will be required to pay an annual fee of $15.00 to the

Hawaii Information Consortium, LLC (HIC). Bidders choosing not to participate in the HCE program will be required to provide the paper certificates as instructed in the previous paragraphs.

2. **ADD** Section 2.4a, Pre-Bid Conferences

Required Pre-bid Conferences: For construction and design-build projects with an estimated value of $500,000 or more and solicited under the competitive sealed bid method (103D-302 HRS); and for construction and design-build projects with an estimated value of $100,000 or more and solicited under the competitive sealed proposal method (103D-303 HRS); a pre-bid conference is required.

Other Pre-Bid Conferences: The Department may require a pre-bid conference for construction or design-build projects that are below the dollar threshold listed in above or when projects have special or unusual requirements.

Other Conditions: The Department may require the prospective Bidders to make a physical inspection of the project site and make attendance at the pre-bid conference a condition for submitting an offer.

Nothing stated at the pre-bid conference shall change the solicitation unless a change is made by written addendum.

3. **DELETE** Section 2.5, Addenda and Interpretations, in its entirety and replace with the following:

"Discrepancies, omissions, or doubts as to the meaning of drawings and specifications should be communicated using the question and answer section on the HIePRO solicitation for interpretation and must be received in the time frame set in the HIePRO solicitation. Any interpretation, if made and any supplemental instructions will be in the form of written addenda to the plans and specifications and made available prior to the offer due date. It shall be the prospective bidder's sole responsibility to verify and obtain any said addenda. Failure of any bidder to receive any such addendum or interpretation shall not relieve such bidder from any obligation under his bid as submitted. All addenda so issued shall become part of the contract documents."

Section 3 – Award and Execution of Contract

1. **AMEND** Section 3.3, Award of Contract, by deleting "sixty (60)" and replacing with "ninety (90)" in the first paragraph.

2. **AMEND** Section 3.3, Award of Contract, by adding the following after the first paragraph:

"If the contract is not awarded within the ninety (90) days, the Department may request the successful Bidder to extend the time for the acceptance of its bid. The Bidder may reject such a request without penalty; and in such case, the Department may at its sole discretion make a similar offer to the next lowest responsive and responsible bidder and so on until a bid is duly accepted or until the Department elects to stop making such requests."

3. **AMEND** Section 3.9, Notice to Proceed, by deleting "180 days" and replacing with "one (1) year" in the last paragraph.

4. **ADD** Section 3.10, Protests:

"**3.10 PROTESTS**—Pursuant to Section 103D-701, Hawaii Revised Statutes, an actual or prospective offeror who is aggrieved in connection with the solicitation or award may submit a protest. Any protest

shall be submitting in writing to the Chairperson, Department of Land and Natural Resources, 1151 Punchbowl Street, Honolulu, Hawaii 96813, or designee as specified in the solicitation.

A protest shall be submitted in writing within five (5) working days after the aggrieved person knows or should have known the facts giving rise thereto; provided that a protest based upon the content of the solicitation shall be submitted in writing prior to the date set for receipt of offers. Further provided that a protest of an award or proposed award shall be submitted within five (5) working days after the posting of the award of the contract.

The notice of award, if any, resulting from this solicitation shall be posted on the Procurement System on the SPO website: http://hawaii.gov/spo2/.

Section 5 – Control of Work

AMEND Section 5.8 Value Engineering Incentive by deleting "$100,000" and replacing with "$250,000" in the first paragraph.

Section 6 – Substitution of Materials and Equipment

ADD the following to Section 6.3 Sub-paragraph b:

4. If the substitution meets all the requirements of the specifications and plans.

Section 7 – Prosecution and Progress

1. **DELETE** Section 7.2d in its entirety and replace with the following:

"d. Insurance Requirements

1. Obligation of Contractor

The Contractor shall not commence any work until it obtains, at its own expense, all required insurance. Such insurance must have the approval of the Department as to limit, form and amount and must be maintained with a company authorized by law to issue such insurance in the State of Hawaii.

All insurance described herein will be maintained by the Contractor for the full period of the contract and in no event will be terminated or otherwise allowed to lapse prior to written certification of final acceptance of the work by the Department.

Certificate(s) of Insurance acceptable to the Department shall be filed with the Engineer prior to commencement of the work. These certificates shall contain a provision that coverages afforded under the policies will not be canceled or changed until at least thirty days written notice has been given to the Engineer by registered mail. The insurance policies shall name the State of Hawaii, its officers and employees as an additional insured and such coverage shall be noted on the Certificate. Should any policy be canceled before final acceptance of the work by the Department, and the Contractor fails to immediately procure replacement insurance as specified, the Department, in addition to all other remedies it may have for such breach, reserves the right to procure such insurance and deduct the cost thereof from any money due to the Contractor.

Nothing contained in these insurance requirements is to be construed as limiting the extent of Contractor's responsibility for payment of damages resulting from its operations under this contract, including the Contractor's obligation to pay liquidated damages, nor shall it affect the Contractor's separate and independent duty to defend, indemnify and hold the Department harmless pursuant to other provisions of this contract. In no instance will the Department's exercise of an option to occupy and use completed portions of the work relieve the Contractor of its obligation to maintain the required insurance until the date of final acceptance of the work.

All insurance described herein shall cover the insured for all work to be performed under the contract, all work performed incidental thereto or directly or indirectly connected therewith, including traffic detour work or other work performed outside the work area, and all change order work.

The Contractor shall, from time to time, furnish the Engineer, when requested, satisfactory proof of coverage of each type of insurance required or a copy of the actual policies covering the work. Failure to comply with the Engineer's request may result in suspension of the work, and shall be sufficient grounds to withhold future payments due the Contractor and to terminate the contract for Contractor's default.

2. Types of Insurance

The Contractor shall purchase and maintain insurance described below which shall provide coverage against claims arising out of the Contractor's operations under the contract, whether such operations be by the Contractor itself or by the subcontractor or by anyone directly or indirectly employed by any of them or by anyone for whose acts any of them may be liable.

(a) Worker's Compensation. The Contractor and all subcontractors shall obtain full worker's compensation insurance coverage for all persons whom they employ or may employ in carrying out the work under this contact. This insurance shall be in strict conformity with the requirements of the most current and applicable State of Hawaii Worker's Compensation Insurance laws in effect on the date of the execution of this contract and as modified during the duration of the contract.

(b) Commercial General Liability Insurance and Automobile Insurance. Contractor's commercial general liability insurance and automobile liability insurance shall both be obtained in a combined, single limit of not less than $1,000,000 per occurrence that shall include coverage for bodily injury, sickness, disease or death of any person, arising directly or indirectly out of, or in connection with, the performance of work under this contract.

The Contractor's property damage liability insurance shall provide for a single combined limit of not less than $1,000,000 for all damages arising out of injury to or destruction of property of others including the Department's, arising directly or indirectly out of or in connection with the performance of the work under this contract including explosion or collapse.

The Contractor shall either:

i. Require each of its subcontractors to procure and to maintain during the life of its subcontract, subcontractors' comprehensive general liability, automobile liability

and property damage liability insurance of the type and in the same amounts specified herein; or

ii. Insure the activities of its subcontractors in its own policy.

The Contractor will be permitted, in cooperation with insurers, to maintain a self insured retention for up to 25% of the per occurrence combined single limits of the commercial general liability and the automobile liability policies. The existence of the self insured retention must be noted on the certificate of insurance coverage submitted to the Department or else it will be understood that the insurer is providing first dollar coverage for all claims. For all claims within the self-insured retention amount, the rights, duties and obligations between the Contractor and the Department shall be identical to that between a liability insurer and the Department, as an additional insured, as if there was no self-insured retention.

(c) Builder's Risk Insurance. Unless included in the Specifications of this project, the Contractor shall not be required to provide builder's risk insurance. If required as noted in the Specifications, builder's risk insurance shall be provided during the progress of work and until final acceptance by the Department upon completion of the contract. It shall be "All Risk" (including but not limited to earthquake, windstorm and flood damage) completed value insurance coverage on all completed work and work in progress to the full replacement value thereof. Such insurance shall include the Department as additional name insured. The Contractor shall submit to the Engineer for its approval all items deemed to be uninsurable. The policy may provide for a deductible in an amount of up to 25% of the amount insured by the policy. With respect to all losses up to any deductible amount, the relationship between the Contractor and the Department shall be that of insurer and additional insured as if no deductible existed".

2. **DELETE** Section 7.16 in its entirety and replace with the following:

"RESPONSIBILITY FOR DAMAGE CLAIMS; INDEMNITY – The Contractor shall indemnify the State and the Department against all loss of or damage to the State's or the Department's existing property and facilities arising out of any act or omission committed in the performance of the work by the Contractor, any subcontractor or their employees and agents. Contractor shall defend, hold harmless and indemnify the Department and the State, their employees, officers and agents against all losses, claims, suits, liability and expense, including but not limited to attorneys' fees, arising out of injury to or death of persons (including employees of the State and the Department, the Contractor or any subcontractor) or damage to property resulting from or in connection with performance of the work and not caused solely by the negligence of the State or the Department, their agents, officers and employees. The State or the Department may participate in the defense of any claim or suit without relieving the Contractor of any obligation hereunder. The purchase of liability insurance shall not relieve the Contractor of the obligations described herein.

The Contractor agrees that it will not attempt to hold the State and its Departments and Agencies and their officers, representatives, employees or agents, liable or responsible for any losses or damages to third parties from the action of the elements, the nature of the work to be done under these specifications or from any unforeseen obstructions, acts of God, vandalism, fires or encumbrances which may be encountered in the prosecution of the work.

The Contractor shall pay all just claims for materials, supplies, tools, labor and other just claims against the Contractor or any subcontractor in connection with this contract and the surety bond will not be

released by final acceptance and payment by the Department unless all such claims are paid or released. The Department may, but is not obligated to, withhold or retain as much of the monies due or to become due the Contractor under this contract considered necessary by the Engineer to cover such just claims until satisfactory proof of payment or the establishment of a payment plan is presented.

The Contractor shall defend, indemnify and hold harmless the State and its Departments and Agencies and their officers, representatives, employees or agents from all suits, actions or claims of any character brought on account of any claims or amounts arising or recovered under the Worker's Compensation Laws or any other law, by-law, ordinance, order or decree.

Section 8 – Measurement and Payment

1. **DELETE** Section 8.7a in its entirety and replace with the following:

a. Tax Clearances from the State of Hawaii Department of Taxation and Internal Revenue Service, subject to section 103D-328, HRS, current within two months of issuance date indicating that all delinquent taxes levied or accrued under State Statutes against the contractor have been paid.

2. **ADD** Section 8.7d, Certificate of Compliance:

d. A Certification from the Contractor affirming that the Contractor has, as applicable, remained in compliance with all laws as required by Section 103D-310, HRS, and Section 3-122-112, HAR. A contractor making a false affirmation shall be suspended and may be debarred pursuant to section 103D-702, HRS.

1. Certification of Compliance for Final Payment, State Procurement Office Form-22. Must be Signed Original.

3. **ADD** Section 8.7e, Hawaii Compliance Express:

e. In lieu of submitting the tax clearances from Taxation and IRS, and SPO Form -22, the Contractor may choose to use the Hawaii Compliance Express as described on page SP-1 of this Special Provisions.

TABLE OF CONTENTS

TECHNICAL SPECIFICATIONS	SECTION NO.
DIVISION 1 - GENERAL REQUIREMENTS	
General Specifications	01019
Standard References	01090
Archaeological Protection	01100
Variable Quantities Unit Prices	01270
Submittals	01300
Mobilization and Demobilization	01505
Barricades	01530
Pollution Control	01567
Project Sign	01581
Existing Conditions – Hazardous Materials Survey	01715
DIVISION 2 - SITEWORK	
Demolition	02050
Site Preparation	02100
DIVISION 3 - CONCRETE	
NOT USED	
DIVISION 4 – MASONRY	
NOT USED	
DIVISION 5 – METALS	
Structural Steel Framing	05120
DIVISION 6 –WOOD AND PLASTIC	
Wood Treatment	06070
Rough Carpentry	06100
Miscellaneous Carpentry	06105
Wood Roof Decking	06150
Sheathing	06160

TABLE OF CONTENTS (cont.)

TECHNICAL SPECIFICATIONS	SECTION NO.
DIVISION 7 – THERMAL AND MOISTURE PROTECTION	
Asphalt Shingles	07310
Single-Ply TPO Membrane Roofing	07530
Fluid Applied Roofing and Deck Coating System	07540
Sheet Metal Flashing and Trim	07620
Sealants and Caulking	07920
DIVISION 8 –DOORS AND WINDOWS	
Vinyl Windows	08560
DIVISION 9 – FINISHES	
Paints and Coatings	09900
DIVISION 10 -SPECIALTIES	
NOT USED	
DIVISION 11 – EQUIPMENT	
NOT USED	
DIVISION 12 – FURNISHINGS	
NOT USED	
DIVISION 13 –SPECIAL CONSTRUCTION	
Removal and Disposal of Asbestos Containing Material	13281
Lead Containing Paint Control Measures	13282
DIVISION 14 –CONVEYING SYSTEMS	
NOT USED	
DIVISION 15 –MECHANICAL	
NOT USED	
DIVISION 16 –ELECTRICAL	
NOT USED	

SECTION 01019

GENERAL SPECIFICATIONS

PART 1 - GENERAL

1.1 GENERAL REQUIREMENTS

Work shall consist of furnishing all labor, tools, materials and equipment necessary and required to construct in place complete all work as indicated on the drawings and as specified herein.

1.2 GENERAL

A. Examination of Premises: The Contractor shall contact the Engineer and obtain permission before visiting the site.

B. All lines and grades shall be established by a licensed surveyor , or licensed Civil Engineer, registered in the State of Hawaii. The Contractor shall submit evidence of current and valid registration.

C. Notices: The Contractor shall notify the Engineer and give at least three (3) working days notice before starting any work.

D. Disruption of Utility Services: All work related to the temporary disconnection of electrical system shall be pre-arranged with the Engineer so that any disruption of such services will be kept to a minimum. In the event temporary power hook-up is required, the Contractor shall provide the necessary services.

E. Contractor's Operations

1. The Contractor must employ, insofar as possible, such methods and means of carrying out the work so as not to cause any interruption or interference to the facility's operations. Where the Contractor's operations would result in interruptions which would hamper the operations of the facilities, the Contractor shall rearrange the schedule of work accordingly.

2. The Contractor shall maintain safe passageway to and from the facility for the user agency personnel and the public at all times.

F. Construction Schedule

1. Schedule of Key Dates:

The schedule set forth below represents the Department of Land and Natural Resource's best estimate of the schedule that will be followed.

Offer Due Date – September 19, 2016
Notice of Award (approximate) – October 3, 2016
Contract Start Date (approximate) – December 5, 2016

2. Time Window for Construction

The Heeia State Park banquet hall is an active facility that is used daily by Kamaaina Kids. This non-profit organization receives much of their income from rental of the banquet hall for parties and receptions. To avoid their busy season, construction must occur between the months of January through April. The estimated contract start date is December 5, 2016. Work must be completed by April 30, 2017. By submitting a bid, the Bidder certifies that it will be able to comply with this requirement.

3. Construction Schedule

Submit a proposed construction schedule to the Engineer for review and approval within 30 calendar days prior to start of work. The contractor shall coordinate their schedule with the Engineer if rescheduling of work is required.

G. Lead Paint

1. When the project includes paint to be disturbed that was applied prior to 1980, it shall be assumed to contain lead. The Contractor shall inform its employees, subcontractors, and all other persons engaged in the project that lead containing paints are present in the existing buildings at the job site and to follow the requirements of the Department of Labor and Industrial Relations, Division of Occupational Safety and Health, Title 12, Subtitle 8,Chapter 148, Lead Exposure in Construction, Hawaii Administrative Rules (Chapter 12-148, HAR).

H. Parking Policy for Contractor

1. The Contractor and its employees will not be allowed to park in zones assigned to facility personnel.

2. Areas to be used by the Contractor shall be as designated by the Engineer. Any lawn damaged by the Contractor shall be restored as instructed by the Engineer at no cost to the State.

I. Toilet Accommodations: The Contractor may use the existing toilet facilities if so designated by the Engineer; however, it is the Contractor's responsibility to keep same clean and in a sanitary condition at all times.

J. Protection of Property: The Contractor shall continually maintain adequate protection of all its work from damage and shall protect all property, including but not limited to buildings, equipment, furniture, grounds, vegetation, material, utility systems located at and adjoining the job site. The Contractor shall repair, replace or pay the expense of repair of damages resulting from its operations.

K. Use of Power Driven Equipment: The Contractor is cautioned to take all necessary safety precautions to protect the facility personnel, and the public whenever power driven equipment is used.

L. Safety: The Contractor shall carefully read and strictly comply with the requirements of the Hawaii Occupational Safety and Health Law, Chapter 396, Hawaii Revised Statutes, as amended, is applicable and made a part of the Contract.

M. Clean Up Premises: The Contractor shall clean up and remove from premises all debris accumulated from operations as necessary or as directed. See also Section 7.25 of the General Conditions.

N. Responsibility

1. The State will hold the Contractor liable for all the acts of Subcontractors and shall deal only with the prime Contractor in matters pertaining to other trades employed on the job. The Contractor shall be responsible for coordinating the work of all trades on the job.

2. Should the Contractor discover any discrepancy in the plans or specifications, the Contractor shall immediately notify the Engineer before proceeding any further with the work, otherwise, the Contractor will be held responsible for any cost involved in correction of work placed due to such discrepancy.

O. Cooperation With Other Contractors: The State reserves the right at any time to contract for or otherwise perform other or additional work within the contract zone limits of this Contract. The Contractor of this project shall, to the extent ordered by the State, conduct its work so as not to interfere with or hinder the progress or completion of the work performed by other contractors.

P. Division of the Work: The Divisions and Sections into which these Specifications are divided shall not be considered an accurate or complete segregation of work by trades. This also applies to all work specified within each Section.

Q. Drawings and Specifications

1. The Contractor shall not make alterations in the drawings and specifications. In the event the contractor discovers any errors or discrepancies, the Contractor shall immediately notify the Engineer in accordance with the General Conditions.

2. Where devices, or items, or parts thereof are referred to in the singular, it is intended that such reference shall apply to as many such devices, items or parts as are required to properly complete the work.

3. Specifications and drawings are prepared in abbreviated form and include incomplete sentences. Omission of words or phrases such as "the Contractor shall", "as shown on the drawings", "a", "an", and "the" are intentional. Omitted words and phrases shall be provided by inference to form complete sentences.

R. Required Submittals

1. Required submittals as specified in the Technical Sections of these specifications include one or more of the following: Shop drawings; color samples; material samples; technical data; schedules of materials; schedules of operations; guarantees; operating and maintenance manuals; and as-built drawings.

2. The Contractor shall make a comprehensive list of the required submittals, by Specification Section, and submit this list to the Engineer within 15 days after notice to proceed.

3. As-Built Drawings: When as-built drawings are required for submittal, the following shall apply:

a. As-built drawings, the intent of which is to record the actual in-place construction so that any future renovations or tie-ins can be anticipated accurately, shall be required.

b. All deviations from alignments, elevations and dimensions which are stipulated on the plans shall be recorded in red on the as-built drawings.

c. The following procedure shall be followed:

1) Immediately after these changes are constructed in place, the Contractor shall record them on the field office plans.

2) Within two weeks after final inspection of the project, the Contractor shall transfer the changes marked on the field office plans onto a clean copy of plans using a red pencil. Any deletions shall be so noted and redrawn as necessary. The Contractor shall stamp or mark the tracings "AS-BUILT", and also sign and date each drawing so marked.

3) The Contractor shall submit the as-built drawings to the Engineer for review and approval. After the Engineer approves the as-built drawings, the Contractor shall submit an electronic copy in Adobe PDF format on CD ROM.

4) Any as-built drawing which the Engineer determines does not accurately record the deviation shall be corrected by the State, and the Contractor shall be charged for the services.

END OF SECTION

SECTION 01090

STANDARD REFERENCES

PART 1 - GENERAL

Wherever used in the project, the following abbreviations will have the meanings listed:

Abbreviation	Company
AA	Aluminum Association Incorporated 818 Connecticut Avenue, N.W. Washington, D.C. 20006
AASHTO	American Association of State Highway and Transportation Officials 444 North Capitol Street, N.W., Suite 225 Washington, D.C. 20001
ACI	American Concrete Institute P.O. Box 19150 Detroit, MI
AEIC	Association of Edison Illuminating Companies 51 East 42nd Street New York, NY 10017
AFBMA	Anti-Friction Bearing Manufacturer's Association 60 East 42nd Street New York, NY 10017
AGA	American Gas Association 8501 East Pleasant Valley Road Cleveland, OH 44131
AGMA	American Gear Manufacturer's Association 1330 Massachusetts Avenue, N.W. Washington, D.C.
AISC	American Institute of Steel Construction 101 Park Avenue New York, NY 10017
AISI	American Iron and Steel Institute 1000 16th Street, N.W. Washington, D.C. 20036

Abbreviation	Company
AITC	American Institute of Timber Construction 333 West Hampden Avenue Englewood, CO 80110
AMCA	Air Moving and Conditioning Association, Inc. 30 West University Drive Arlington Heights, IL 60004
ANSI	American National Standards Institute, Inc. 1430 Broadway New York, NY 10018
APA	American Plywood Association 1119 A Street Tacoma, WA 98401
API	American Petroleum Institute 1801 K Street N.W. Washington, DC 20006
ARI	Air-Conditioning and Refrigeration Institute 1814 North Fort Myer Drive Arlington, VA 22209
ASCE	American Society of Civil Engineers 345 East 47th Street New York, NY 10017
ASCII	American Standard Code for Information Interchange United States of America Standards Institute 1430 Broadway New York, NY 10018
ASE Code	American Standard Safety Code for Elevators, Dumbwaiter and Escalators American National Standards Institute 1430 Broadway New York, NY 10018
ASHRAE	American Society of Heating, Refrigeration and Air Conditioning Engineers United Engineering Center 345 East 47th Street New York, NY 10017

Abbreviation	Company
ASME	American Society of Mechanical Engineers 345 East 47th Street New York, NY 10017
ASTM	American Society for Testing and Materials 1916 Race Street Philadelphia, PA 19103
AWPA	American Wood Preservers Association 1625 Eye Street Washington, DC 20006
AWS	American Welding Society 2501 N.W. 7th Street Miami, FL 33125
AWWA	American Water Works Association 6666 West Quincy Avenue Denver, CO 80235
CBM	Certified Ballast Manufacturers 2120 Keith Building Cleveland, OH 44115
CMAA	Crane Manufacturers Association of America, Inc. (Formerly called: Overhead Electrical Crane Institute - OECI) 1326 Freeport Road Pittsburgh, PA 15238
CRSI	Concrete Reinforcing Steel Institute 180 North La Salle Street Chicago, IL 60601
CSA	Canadian Standards Association 178 Rexdale Boulevard Rexdale, Ontario, M9W IR3, Canada
DEMA	Diesel Engine Manufacturer's Association 122 East 42nd Street New York, NY 10017

Abbreviation	Company
DIS	Division of Industrial Safety California Department of Industrial Relations 2422 Arden Way Sacramento, CA 95825
EEI	Edison Electric Institute 90 Park Avenue New York, NY 10016
EIA	Electronic Industries Association 2001 Eye Street N.W. Washington, DC 20006
EJMA	Expansion Joint Manufacturer's Association 331 Madison Avenue New York, NY 10017
ESO	Electrical Safety Orders, California Administrative Code, Title 8, Chap. 4, Subarticle 5 Office of Procurement, Publications Section P.O. Box 20191 8141 Elder Creek Road Sacramento, CA 95820
FEDSPEC	Federal Specifications General Services Administration Specification and Consumer Information Distribution Branch Washington Navy Yard, Bldg. 197 Washington, DC 20407
FEDSTDS	Federal Standards (see FEDSPECS)
FM	Factory Mutual Research 1151 Boston-Providence Turnpike Norwood, MA 02062
HEI	Heat Exchange Institute 122 East 42nd Street New York, NY 10017

Abbreviation	Company
HI	Hydraulic Institute 1230 Keith Building Cleveland, OH 44115
IAPMO	International Association of Plumbing and Mechanical Officials 5032 Alhambra Avenue Los Angeles, CA 90032
ICBO	International Conference of Building Officials 5360 South Workman Mill Road Whittier, CA 90601
ICEA	Insulated Cable Engineers Association P.O. Box P South Yarmouth, MA 02664
IEEE	Institute of Electrical and Electronics Engineers, Inc. 345 East 47th Street New York, NY 10017
IES	Illuminating Engineering Society C/O United Engineering Center 345 East 47th Street New York, NY 10017
ISA	Instrument Society of America 400 Stanwix Street Pittsburgh, PA 15222
JIC	Joint Industrial Council 7901 Westpark Drive McLean, VA 22101
MILSPEC	Military Specifications Naval Publications and Forms Center 5801 Tabor Avenue Philadelphia, PA 19120
MSS	Manufacturers Standardization Society of the Valve and Fittings Industry, Inc. 127 Park Street, N.E. Vienna, VA 22180

Abbreviation	Company
NAAMM	National Association of Architectural Metal Manufacturers 100 South Marion Street Oak Park, IL 60302
NACE	National Association of Corrosion Engineers P.O. Box 986 Katy, TX 77450
NEC	National Electric Code National Fire Protection Association 470 Atlantic Avenue Boston, MA 02210
NEMA	National Electrical Manufacturer's Association 155 East 44th Street New York, NY 10017
NESC	National Electric Safety Code American National Standards Institute 1430 Broadway New York, NY 10018
NFPA	National Forest Products Association (Formerly called: National Lumber Manufacturer's Association) 1619 Massachusetts Avenue, N.W. Washington, DC 20036
OSHA	Occupational Safety and Health Act U.S. Department of Labor San Francisco Regional Office 450 Golden Gate Avenue, Box 36017 San Francisco, CA 94102
PPIC	The Plumbing & Piping Industry Council, Inc. Suite 402 510 Shatto Place Los Angeles, CA 90020
SAE	Society of Automotive Engineers 2 Pennsylvania Street New York, NY 10001

Abbreviation	Company
SAMA	Scientific Apparatus Makers Association One Thomas Circle Washington, DC 20005
SBCC	Southern Building Code Congress 1116 Brown-Marx Building Birmingham, AL 35203
SMACNA	Sheet Metal and Air Conditioning Contractors National Association, Inc. 8224 Old Courthouse Road Tysons Corner Vienna, VA 22180
SSPWC	Standard Specifications for Public Works Construction Building News, Inc. 3055 Overland Avenue Los Angeles, CA 90034
TEMA	Tubular Exchanger Manufacturer's Association 331 Madison Avenue New York, NY 10017
UBC	Uniform Building Code Published by ICBO
UL	Underwriters Laboratories Inc. 207 East Ohio Street Chicago, IL 60611
UMC	Uniform Mechanical Code Published by ICBO
UPC	Uniform Plumbing Code Published by IAPMO
USBR	Bureau of Reclamation U.S. Department of Interior Engineering and Research Center Denver Federal Center, Building 67 Denver, CO 80225
WWPA	Western Wood Products Association (Formerly called: West Coast Lumberman's Association - WCLA) Yeon Building Portland, CA 97204

PART 2 - PRODUCTS (NOT USED)

PART 3 - EXECUTION (NOT USED)

- END OF SECTION -

SECTION 01100

ARCHAEOLOGICAL PROTECTION

PART 1 - GENERAL

1.1 This section covers the requirements for the protection and preservation of historical sites and values.

PART 2 - PRODUCTS (NOT USED)

PART 3 - EXECUTION

3.1 CONSTRUCTION METHOD: Representatives of the State will from time to time examine the area as work proceeds. If historical values are noted, the State may order a halt to the work in the vicinity of the historical values until the State can examine further. The Contractor shall notify the State if he finds anything he suspects to be of historic significance and shall discontinue further work in the vicinity of the find until the State can examine the area. In either case, further work in the vicinity of such historical or suspected historical values may proceed only upon approval by the State. Such approval can be normally expected within one week and shall in no case require more than one month.

END OF SECTION

SECTION 01270

VARIABLE QUANTITIES UNIT PRICES

PART 1 - GENERAL

1.1 SUMMARY

A. This Section includes administrative and procedural requirements for unit prices.

1.2 DEFINITIONS

A. Unit price is an amount proposed by the Bidder stated on the Proposal Form, as a price per unit of measurement for materials or services included in the Total Base Bid Price.

B. The unit prices proposed by the Bidder on the Proposal Form shall be used by the Contractor for billing for additional unforeseen applicable work that may be encountered during construction that is not otherwise shown on the drawings.

1.3 RELATED DOCUMENTS

A. Measurement and payment for unit price items are governed by the General Conditions.

1.4 PROCEDURES

A. Unit prices include all necessary material, plus cost for delivery, installation, painting, insurance, applicable taxes, coordination overhead, and profit.

B. List of Unit Prices: A list of unit prices is included at the end of this Section. Specification Sections referenced in the schedule contain requirements for materials described under each unit price.

1. The description of Variable Quantities Unit Price items is not intended to give a detailed description of all work required, as only principal features of such work are listed.

2. Detailed descriptions are given in the appropriate Specification Sections or Drawings named in the general description below.

C. Include Variable Quantities Unit Price costs on the Proposal form.

D. All computations of the Variable Quantities Unit Prices shall use the unit prices noted in the Proposal Form. Measurements will be to the nearest estimated unit quantity. Payment will be made for quantities actually installed at the applicable price, measured by the Contractor, accepted by the State's Representative, and acceptably completed.

E. The Variable Quantities Unit Prices are estimated quantities. Where the quantity of a pay item vary more than 15 percent above or below the estimated quantity stated in the contract, an

adjustment in the contract price may be made upon demand by either the State or Contractor. The adjustment shall be based upon any increase or decrease in costs due solely to the variation above 115 percent or below 85 percent of the estimated quantity.

F. Do not proceed with work exceeding the estimated quantities written in the Bid Form until receipt of written approval by the State's Representative.

PART 2 - PRODUCTS (Not Used)

PART 3 - EXECUTION

3.1 LIST OF VARIABLE QUANTITIES

Unit Price No. 1:	Remove damaged 2x roof decking and install new 2x roof decking.
Unit Price No. 2:	Remove damaged 2x purlins and install new 2x purlins over kitchen area.
Unit Price No. 3:	Remove damaged 4x roof purlins and install new 4x roof purlins over banquet hall area.

END OF SECTION

SECTION 01300

SUBMITTALS

PART 1 - GENERAL

1.1 SUBMITTALS

A. Shop drawings shall be required for:

1. Division 16 - Electrical Work.

2. Any others as called for in the plans, specifications or by the Engineer.

B. Other required submittals shall include:

1. Piping Layout.

2. Manufacturer's Data.

3. Certificates of Warranty.

4. Any others as called for in the plans, specifications, or by the Engineer.

1.2 BIDDER'S SPECIAL RESPONSIBILITY FOR COORDINATING CONTRACTUAL WORK AND SUBMITTALS:

A. The Contractor is responsible for the coordination of all contractual work and submittals.

B. The Contractor shall have a rubber stamp made up in the following format:

CONTRACTOR NAME

PROJECT: _____

_____

JOB NO: _____

THIS SUBMITTAL HAS BEEN CHECKED BY THIS GENERAL CONTRACTOR. IT IS CERTIFIED CORRECT, COMPLETE, AND IN COMPLIANCE WITH CONTRACT DRAWINGS AND SPECIFICATIONS. ALL AFFECTED CONTRACTORS AND SUPPLIERS ARE AWARE OF, AND WILL INTEGRATE THIS SUBMITTAL INTO THEIR OWN WORK.

DATE RECEIVED _____
SPECIFICATION SECTION _____
SPECIFICATION PARAGRAPH _____
DRAWING NUMBER _____
SUBCONTRACTOR NAME _____
SUPPLIER NAME _____
MANUFACTURER NAME _____

CERTIFIED BY: _____

C. This stamp, "filled in", should appear on the title sheet of each shop drawing, on a cover sheet of submittals in an 8-1/2" x 11" format, or on one face of a cardstock tag (min. 3" x 6") tied to each sample. The tag on the samples should state what the sample is so that, if the tag is accidentally separated from the sample, it can be matched up again. The back of this tag will be used by the Engineer for his receipt, review, and log stamp and for any comments that relate to the sample.

D. All submittals for material, equipment, and shop drawings listed in the contract documents, including dimensioned plumbing shop drawings, shall be required and shall be reviewed by the Engineer, prior to any ordering of materials and equipment.

E. Unless otherwise noted, the Contractor shall submit to the Engineer for his review eight copies of all shop drawings, piping layout, and/or catalog cuts for fabricated items and manufactured items (including mechanical and electrical equipment) required for the construction. Drawings shall be submitted in sufficient time to allow the Engineer not less than twenty regular working days for examining the drawings.

F. The drawing shall be accurate, distinct, and complete and shall contain all required information, including satisfactory identification of items, units and assemblies in relation to the contract drawings and specifications.

G. Unless otherwise approved by the Engineer, shop drawings shall be submitted only by the Contractor, who shall indicate by a signed stamp on the drawings or other approved means that the Contractor has checked the shop drawings and that the work or equipment shown is in accordance with contract requirements and has been checked for dimensions and relationship with work of all other trades involved. All deviations from the plans and specifications shall be listed. The practice of submitting incomplete or unchecked shop drawings for the Engineer to correct or finish will not be acceptable, and shop drawings which, in the opinion of the Engineer, clearly indicate that they have not been checked by the Contractor will be considered as not complying with the intent of the contract documents and will be returned to the Contractor for resubmission in the proper form.

H. When the shop drawings have been reviewed by the Engineer, two sets of submittals will be returned to the Contractor appropriately stamped. If major changes or corrections are necessary, the drawing may be rejected and one set will be returned to the Contractor with such changes or corrections indicated, and the Contractor shall correct and resubmit eight

copies of the drawings, unless otherwise directed by the Engineer. No changes shall be made by the Contractor to the resubmitted shop drawings other than those changes indicated by the Engineer. The resubmittal shall be so indicated on the shop drawing.

I. The review of such drawings and catalog cuts by the Engineer shall not relieve the Contractor from responsibility for correctness of the dimensions, fabrication details, and space requirements or for deviations from the contract drawings and specifications, unless the Contractor has called attention to such deviations, in writing, by a letter accompanying the drawings and the Engineer approved the change or deviations, in writing, at the time of submission; nor shall review by the Engineer relieve the Contractor from the responsibility for errors in the shop drawings. When the Contractor does call such deviations to the attention of the Engineer, he shall state in his letter whether or not such deviations involve any deduction or extra cost adjustment.

J. The approval of the above drawings, lists, prints, specifications, or other data shall in no way release the Contractor from his responsibility for the proper fulfillment of the requirements of this contract nor for fulfilling the purpose of the installation nor from his liability to replace the same should it prove defective or fail to meet the specified requirements.

PART 2 - PRODUCTS (NOT USED)

PART 3 - EXECUTION (NOT USED)

END OF SECTION

SECTION 01505

MOBILIZATION AND DEMOBILIZATION

PART 1 - GENERAL

1.1 GENERAL REQUIREMENTS

A. Description: This section covers the requirements for mobilization and demobilization.

1.2 MOBILIZATION: Mobilization shall consist of the transporting, assembling, constructing, installing, and making ready for use at the job site, all the equipment, machinery, structures, utilities, materials, labor, and incidentals necessary to do the work covered by this contract.

1.3 DEMOBILIZATION: Demobilization shall consist of the dismantling and removal of the above-mentioned equipment, machinery, structures, utilities, materials, and incidentals, and the cleaning up of the site.

PART 2 - PRODUCTS (NOT USED)

PART 3 - EXECUTION

3.1 GUIDELINES: If the Contractor utilizes private lands other than the sites provided by the Department for mobilization purposes, the provisions of this section shall apply, and the mobilization and demobilization work on said private lands shall be in accordance with the agreement between the Contractor and the land owner.

Any and all additional mobilization or demobilization costs in excess of the maximum amounts specified in the Proposal shall be included in the appropriate unit prices bid in the Proposal. The Contractor shall not receive any compensation for mobilization and demobilization in addition to those specified in the Proposal.

All equipment, machinery, buildings, utilities and incidentals mobilized and demobilized under this section shall remain the property of the Contractor.

END OF SECTION

SECTION 01530

BARRICADES

PART 1 - GENERAL

1.1 GENERAL REQUIREMENTS

A. Description. This work shall consist of furnishing, installing and maintaining barricades in accordance with the requirements of the contract.

Barricade application shall be provided for in the latest edition of the FHWA publication, Manual on Uniform Traffic Control Devices for Streets and Highways (MUTCD), and as amended.

PART 2 - PRODUCTS

2.1 MATERIALS

A. Lumber: Lumber for rails, frames and braces shall be dry, sound, undamaged, well seasoned, and free from any defect which may impair their strength and durability.

B. Hardware: Nails shall be galvanized wire nails. As many and as large a size as is practicable shall be used.

C. Paints: Paints shall be exterior enamel paint of the best grade or first line as made by approved manufacturers.

D. Sheet Reflecting Material: Sheet reflecting material shall conform to the applicable requirements of Subsection 712.20(C) of the "Standard Specifications for Road and Bridge Construction".

E. Alternate Designs: Alternate barricade designs such as plastic molded barricades may be used subject to the Engineer's approval. The Contractor shall submit shop drawings or catalog cuts for approval.

PART 3 - EXECUTION

3.1 CONSTRUCTION REQUIREMENTS

A. General: Barricades shall be constructed in a first class, workmanlike manner in accordance with details shown on the plans and as specified herein.

Barricades shall be in good condition and approved by the Engineer for use within the project limits. Barricade application and installation shall be as shown on the plans and as directed by the Engineer in accordance with the guidelines provided in the latest edition of

the FHWA publication, Manual on Uniform Traffic Control Devices for Streets and Highways (MUTCD), and any amendments or revisions thereof as may be made from time to time.

Sand bags or other approved weights shall be provided where required or as directed by the Engineer. Sand bags or other approved weights shall not be placed on any striped barricade rail.

Steady burn and/or flashing lamps shall be required on selected barricades used during hours of darkness. Locations shall be as shown on the plans and as directed by the Engineer. Lamps shall be attached on the barricade ends closest to the traveled way and shall be visible to the motorist.

Barricades furnished and paid for as provided for as provided herein may be used for temporary detours, construction phasing, or other temporary traffic control work.

Barricades furnished and paid for use in temporary detours or construction phasing may be used for permanent location called for on the plans.

Upon completion of the construction work, barricades shall be left in place, relocated, or removed and disposed of as shown on the plans or as directed by the Engineer. Barricades left in place, or relocated to new permanent locations shall become the property of the State. Barricades directed to be removed and disposed of shall become the property of the Contractor.

B. Painting: Wooden rails, frames and braces shall be given a prime coat and 2 finish coats of new white exterior enamel paint. Rail faces to be reflectorized may be left unpainted unless otherwise specified or directed.

C. Reflectorization: Reflectorization of barricade rails shall be done in a first class, workmanlike manner and the attachment of reflective sheeting shall be as shown on the plans, specified herein, or as directed and approved by the Engineer.

Both vertical faces of each barricade rail shall be reflectorized as shown on the plans.

Wooden rails shall be reflectorized with one of the following:

1. Reflective sheeting specified in Subsection 712.20(C)(4) of the "Standard Specifications for Road and Bridge Construction" and backed with a 26 gage galvanized steel sheet, or

2. a hardened aluminum backed reflective sheeting as specified in Subsection 712.20(C)(5) of the "Standard Specifications for Road and Bridge Construction."

D. Color: Rails, frames and braces shall be white.

The front and back faces of barricade rails shall have 6-inch wide alternative colored and white striped sloping downward toward the traveled way at an angle of 45 degrees with the vertical. The colored stripes shall be either orange or red in accordance with the following requirements:

1. Orange and white stripes shall be used in the following conditions:

   a. Construction work.

   b Detours.

   c. Maintenance work.

2. Red and white stripes shall be used in the following conditions:

   a. On roadways with no outlet (ie. dead-ends, cul-de-sacs).

   b. Ramps or lanes closed for operational purposes.

   c Permanent or semipermanent closure or termination of a roadway.

E. Maintenance: Barricades shall be kept in good condition throughout their usage during construction until the end of the contract.

F. The Contractor shall repair, repaint, clean or replace the barricades as required and as directed by the Engineer to maintain their effectiveness and appearance.

The Constructor shall immediately replace all lost, stolen or damaged barricades, lamps, sand bags and other approved weights.

Barricades used during construction phasing, temporary detours or other temporary traffic control work shall be cleaned and repaired as necessary, prior to being relocated to a permanent location shown on the plans or as directed.

No extra payment will be made for any repair work, repainting, or cleaning of barricades. The Engineer shall determine the suitable condition of each barricade and shall determine when each barricade shall be repaired, repainted or cleaned.

END OF SECTION

SECTION 01567

POLLUTION CONTROL

PART 1 - GENERAL

1.1 GENERAL REQUIREMENTS

A. Rubbish Disposal

1. No burning of debris and/or waste materials shall be permitted on the project site.

2. No burying of debris and/or waste material except for materials which are specifically indicated elsewhere in these specifications as suitable for backfill shall be permitted on the project site.

3. All unusable debris and waste material shall be hauled away to an appropriate off-site dump area. During loading operations, debris and waste materials shall be watered down to allay dust.

4. No dry sweeping shall be permitted in cleaning rubbish and fines which can become airborne from floors or other paved areas. Vacuuming, wet mopping or wet or damp sweeping is permissible.

5. Enclosed chutes and/or containers shall be used for conveying debris from above to ground floor level.

6. Clean-up shall include the collection of all waste paper and wrapping materials, cans, bottles, construction waste materials and other objectionable materials, and removal as required. Frequency of clean-up shall coincide with rubbish producing events.

B. Dust

1. The Contractor shall prevent dust from becoming airborne at all times including non-working hours, weekends and holidays in conformance with the State Department of Health, Administrative Rules, Title 11, Chapter 60 - Air Pollution Control.

2. The method of dust control and costs shall be the responsibility of the Contractor. Methods of dust control shall include the use of water, chemicals or asphalt over surfaces which may create airborne dust.

3. The Contractor shall be responsible for all damage claims in accordance with Section 7.16 - "Responsibility for Damage Claims" of the GENERAL CONDITIONS.

C. Noise

1. Noise shall be kept within acceptable levels at all times in conformance with the State Department of Health, Administrative Rules, Title 11, Chapter 46 - Community Noise Control for Oahu. The Contractor shall obtain and pay for the Community Noise Permit from the State Department of Health when the construction equipment or other devices emit noise at levels exceeding the allowable limits.

2. All internal combustion engine-powered equipment shall have mufflers to minimize noise and shall be properly maintained to reduce noise to acceptable levels.

3. Starting-up of construction equipment meeting allowable noise limits shall not be done prior to 6:45 a.m. without prior approval of the Engineer. Equipment exceeding allowable noise levels shall not be started-up prior to 7:00 a.m.

D. Others

1. Wherever trucks and/or vehicles leave the site and enter surrounding paved streets, the Contractor shall prevent any material from being carried onto the pavement. Waste water shall not be discharged into existing streams, waterways, or drainage systems such as gutters and catch basins unless treated to comply with the State Department of Health water pollution regulations.

2. Trucks hauling debris shall be covered as required by PUC Regulation. Trucks hauling fine materials shall be covered.

3. No dumping of any waste will be permitted at the job-site.

4. Contractor's trucks shall not be cleaned on the job-site.

5. When spray painting is allowed such spray painting shall be done by the "airless spray" process. Other types of spray painting will not be allowed.

F. Suspension of Work

1. Violations of any of the above requirements or any other pollution control requirements which may be specified in the Technical Specifications herein shall be cause for suspension of the work creating such violation. No additional compensation shall be due the Contractor for remedial measures to correct the offense. Also, no extension of time will be granted for delays caused by such suspensions.

2. If no corrective action is taken by the Contractor within 72 hours after a suspension is ordered by the Engineer, the State reserves the right to take whatever action is necessary to correct the situation and to deduct all costs incurred by the State in taking such action from monies due the Contractor.

3. The Engineer may also suspend any operations which he/she feels are creating pollution problems although they may not be in violation of the above-mentioned requirements. In this instance, the work shall be done by force account as described in Subsection 4.2b -"Additional Work" of the GENERAL CONDITIONS and paid for in accordance with Subsection 8.4b - "Force - Account Work" therein. The count of elapsed working days to be charged against the contract in this situation shall be computed in accordance with Subsection 7.18 - "Contract Time" of the GENERAL CONDITIONS.

PART 2 - PRODUCTS (NOT USED)

PART 3 - EXECUTION (NOT USED)

END OF SECTION

SECTION 01581

PROJECT SIGN

PART 1 - GENERAL

1.1 GENERAL REQUIREMENTS

Furnish all labor, materials and equipment necessary to construct and install all project sign as specified hereinafter.

1.2 SUBMITTAL

The contractor shall provide the Engineer with six (6) shop drawings of the project sign for review and approval by the Engineer prior to ordering the sign.

1.3 LETTER STYLE

Copy is centered and set in Adobe Type Futura Heavy. If this specific type is not available, Futura Demi Bold may be substituted. Copy should be set and spaced by a professional typesetter and enlarged photographically for photo stencil screen process.

1.4 ART WORK

Constant elements of the sign layout - frame, outline, stripe, and official state information - may be duplicated following drawing measurements, or be reproduced and enlarged photographically using a layout template if provided. The "STATE OF HAWAII" masthead should be reproduced and enlarged as specified, using the artwork provided.

1.5 TITLES

The specific major work of the project under construction is emphasized by using 3-3/4" type, all capitals. Secondary information such as location or buildings uses 2-1/4" type, all capitals. Other related information of lesser importance uses letter heights as indicated on 01581-3, upper / lower case letters.

Design should follow the example on page 01581-3

PART 2 - PRODUCTS

2.1 MATERIALS

A. LUMBER

1. Panel is 3/4" exterior grade high density overlaid plywood, with resin-bonded surfaces on both sides.

2. 4"x4" sign posts shall be Douglas Fir No. 1 or better.

B. PAINTS & INKS

Screen print inks are matte finish. Paints are satin finish, exterior grade. References to Ameritone Color Key Paint are for color match only.

COLOR:
1. 1BL10A Bohemian Blue
2. 2H16P Softly (White)
3. 2VR2A Hot Tango (Red)
4. 1M52E Tokay (Gray)

C. CONCRETE

Concrete shall be class B with a 2,500 psi 28-day compressive strength.

PART 3 - EXECUTION

3.1 GENERAL

A. The Project Sign shall be constructed with new materials as specified above.

B. The Project sign shall be installed at the location indicated on the drawings or as designated by the Engineer. The project sign shall be erected upon commencement of work.

3.2 MEASUREMENTS AND PAYMENT

The construction of the project sign, including all equipment, labor and material necessary to furnish and install the project sign will be paid for under the "Project Sign" proposal item.

END OF SECTION

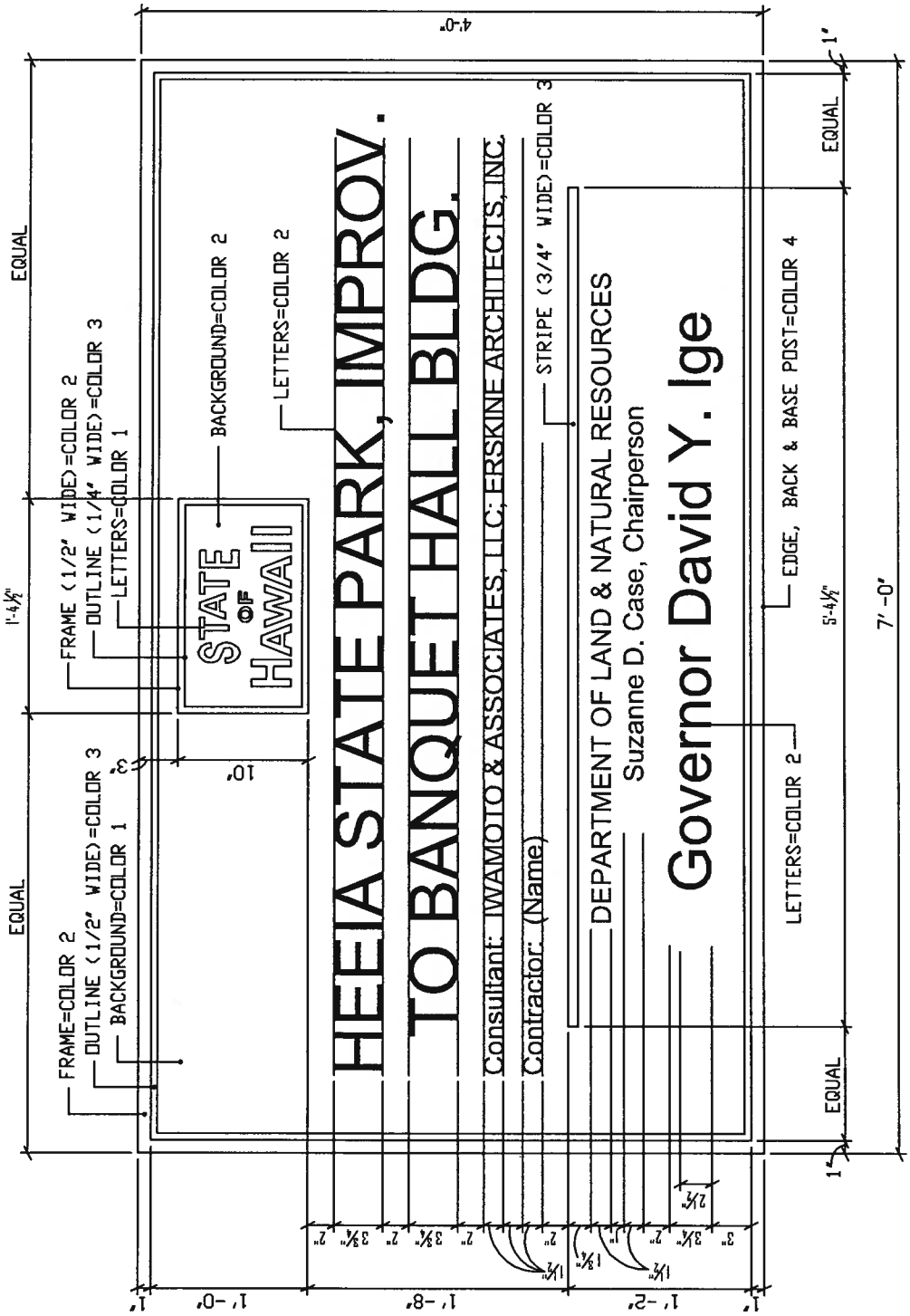

NOTE: Number of signs required 1

Project Sign
01581-3

Job No. F27C793A

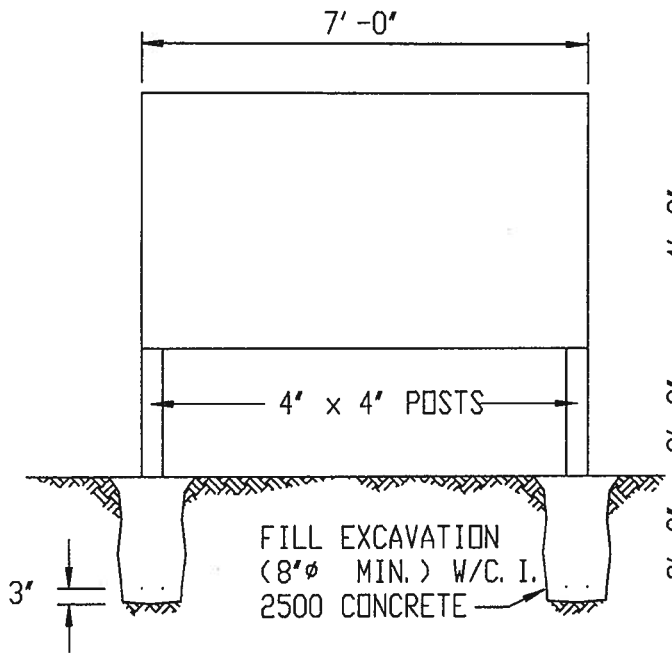

FRONT ELEVATION

NOT TO SCALE

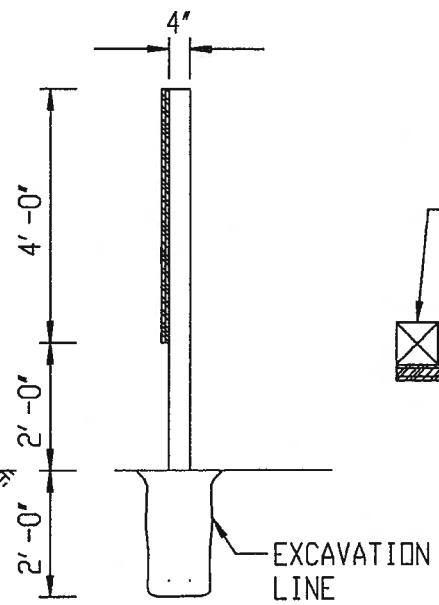

SIDE ELEVATION

NOT TO SCALE

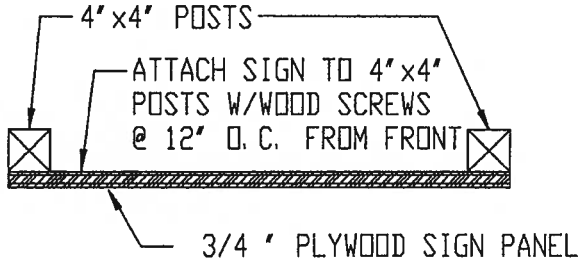

PLAN

NOT TO SCALE

Project Sign
01581-4

SECTION 01715

EXISTING CONDITIONS – HAZARDOUS MATERIALS SURVEY

PART 1-GENERAL

1.1 SECTION INCLUDES

The results of the Owner's survey for materials and is provided for the Contractor's information.

1.2 RELATED SECTIONS

A. Section 13281 – REMOVAL AND DISPOSAL OF ASBESTOS CONTAINING MATERIAL for requirements of all work that disturbs Asbestos Containing Materials.

B. Section 13282 – LEAD CONTAINING PAINT CONTROL MEASURES for requirements of all work that disturbs lead containing paint.

1.3 ASBESTOS CONTAINING MATERIALS

A. The structures to be renovated or demolished under this contract have been surveyed for the presence of asbestos containing materials (ACM). A copy of the initial survey report, as well as any subsequent supplemental survey reports if performed is included in the Section.

B. The reports are included, even when no ACM was found, for the Contractor's information. The Contractor shall review the attached reports for the reason any negative ACM finding was made. The Contractor may, at no expense to the Owner, perform further asbestos surveys in areas where asbestos is suspected and where work is to be performed. If ACM is found, notify the Contracting Officer immediately. The Owner will reimburse the Contractor for the testing cost if ACM is found.

C. If there is ACM or suspected ACM in areas outside those where work is to be performed, such materials shall not be disturbed in any way.

D. The Contractor shall notify his employees, subcontractors and all other persons engaged in the demolition and renovation work of the presence of asbestos in accordance with the requirements of Chapter 110, Article 12-110-2 (f) (1) (B) of the Occupational Safety and Health Standards, State of Hawaii.

E. In the event that work is required in any area on the site other than those designated in the project, the Contractor shall request asbestos survey reports for each such area from the authorized representative of the Owner and shall use them to notify all persons on the project as indicated in paragraph 1.02 B.

1.4 LEAD CONTAINING PAINT

A. The structures to be renovated or demolished under this contract have been surveyed for the presence of lead-containing paint (LCP). A copy of the initial survey report, as well as any subsequent supplemental survey reports if performed is included in the Section.

B. In the event that the reports show that lead-containing paint is present, the Contractor shall ensure that he understands the contents of the report referring to areas in which work is to be performed. The contractor shall also understand that all testing was for design purposes only and does not satisfy the requirements of HIOSH Chapter 12-148.

1.5 MISCELLANEOUS HAZARDOUS MATERIALS

The Contractor shall notify his employees, subcontractors and all other persons engaged in the demolition and renovation work of the presence of any other miscellaneous hazardous materials referenced in the survey reports.

PART 2-MATERIALS (not used)

PART 3-EXECUTION

3.1 SURVEY

Limited Hazardous Materials Survey Report, Heeia State Park, Banquet Hall Improvements, Kaneohe, Oahu, Hawaii, Job No. 5-OP-28, dated March 31, 2016, prepared by EnviroServices and Training Center, LLC.

END OF SECTION

LIMITED HAZARDOUS MATERIALS SURVEY REPORT

HEEIA STATE PARK
BANQUET HALL IMPROVEMENTS
KANEOHE, OAHU, HAWAII
JOB NO. 5-OP-28

Prepared for:
IWAMOTO & ASSOCIATES, LLC
98-029 Hekaha Street, Suite 37
Aiea, Hawaii 96701

Prepared by:
ENVIROSERVICES & TRAINING CENTER, LLC
505 Ward Avenue, Suite 202
Honolulu, Hawaii 96814
tel: (808) 839-7222

ETC Project No. 16-4022

March 31, 2016

TABLE OF CONTENTS

1.0 CERTIFICATIONS AND LIMITATIONS **1**

2.0 EXECUTIVE SUMMARY **2**

3.0 INTRODUCTION/PURPOSE **3**

4.0 METHODOLOGY **4**

4.1 ASBESTOS 4
4.2 LEAD PAINT 4

5.0 RESULTS **5**

5.1 ASBESTOS 5
5.2 LEAD PAINT 5

6.0 DISCUSSION AND RECOMMENDATIONS **6**

TABLES

TABLE 1 ASBESTOS SURVEY RESULTS 5
TABLE 2 LEAD PAINT SURVEY RESULTS 6

APPENDICES

APPENDIX I: ..... TABLES OF RESULTS
APPENDIX II: ..... LABORATORY ANALYTICAL RESULTS AND CHAIN-OF-CUSTODY FORMS
APPENDIX III: ..... PHOTOGRAPHIC DOCUMENTATION
APPENDIX IV: ..... SAMPLE LOCATION MAPS

1.0 CERTIFICATIONS AND LIMITATIONS

EnviroServices & Training Center, LLC (ETC) has completed this Limited Hazardous Materials Survey in preparation for the banquet hall improvements project at Heeia State Park located in Kaneohe, Oahu, Hawaii (Subject Site). ETC's findings and recommendations contained herein are based on research, site observations, government regulations and laboratory data, which were gathered at the time and location of the study. Opinions stated in this report do not apply to changes that may have occurred after the services were performed.

ETC has performed specified services for this project with the degree of care, skill and diligence ordinarily exercised by professional consultants performing the same or similar services. No other warranty, guarantee, or representation, expressed or implied, is included or intended; unless otherwise specifically agreed to in writing by both ETC and ETC's Client.

This report is intended for the sole use of Iwamoto & Associates, LLC exclusively for the Subject Site. Iwamoto & Associates, LLC may use and release this report, including making and retaining copies, provided such use is limited to the particular site and project for which this report is provided. However, the services performed may not be appropriate for satisfying the needs of other users. Release of this report to third-parties will be at the sole risk of ETC's Client and/or said user, and ETC shall not be liable for any claims or damages resulting from or connected with such release or any third party's use or reuse of this report.

Prepared By: _____

Celena Freitas
State of Hawaii Asbestos Building Inspector Certification # HIASB-0315
State of Hawaii Lead Risk Assessor Certification # PB-0041

Date: March 31, 2016

2.0 EXECUTIVE SUMMARY

EnviroServices & Training Center, LLC (ETC) has completed this Limited Hazardous Materials Survey Report in preparation for the banquet hall improvements project at Heeia State Park located in Kaneohe, Oahu, Hawaii (Subject Site). During ETC's survey, suspected asbestos containing material (ACM) and surfaces coated in lead containing paint (LCP) were observed. The following summarizes the hazardous materials identified:

Summary of Asbestos Survey

Four (4) materials contained asbestos above the regulatory limit of 1%. These materials are listed in the table below.

Location	*Material*	*Condition*	*Category*	*Friability*	*Asbestos Content*	*Estimated Quantity*
Corrugated Roof Panels	Gray Sealant	Good	Misc.	Non-Friable I	Chrysotile 7%	2 ft^2
Banquet Hall	Pink Drywall Walls	Significantly Damaged	Misc	Friable	Chrysotile 3%	1,500 ft^2
Banquet Hall	White Drywall Ceiling	Damaged	Misc.	Non-Friable I	Chrysotile 3%	8,000 ft^2
Banquet Hall	White Drywall Walls	Significantly Damaged	Misc.	Friable	Chrysotile 3%	1,800 ft^2

Summary of Lead Paint Survey

One (1) sampled surface was found to contain lead in excess of the Environmental Protection Agency (EPA)/United States Department of Housing Urban Development (HUD) guidelines of 0.5% by weight defining Lead-Based Paint (LBP). Three (3) sampled surfaces contained detectable levels of lead less than the EPA/HUD guideline, defining Lead-Containing Paint (LCP).

3.0 INTRODUCTION/PURPOSE

The purpose of this survey was to investigate the banquet hall at Heeia State Park for the presence of hazardous materials that may be affected by the renovation project. Specifically, ETC completed the following tasks:

- Performed site reconnaissance at the Subject Site;
- Collected twenty-seven (27) samples of suspected Asbestos Containing Material (ACM) from various locations throughout the Subject Site;
- Submitted the twenty-seven (27) samples of suspected ACM to EMC Labs, Inc. (EMC) for analysis of asbestos via Polarized Light Microscopy (PLM) in accordance with the Asbestos Hazard Emergency Response Act (AHERA) protocol and the National Institute for Occupational Safety and Health (NIOSH) Method 600/R-93/116;
- Collected five (5) paint chip samples from painted surfaces at the Subject Site;
- Submitted the five (5) paint chip samples to EMC for analysis via Environmental Protection Agency (EPA) Method 7420 for total lead content;
- Visually inspected the Subject Site for the presence of suspected arsenic treated materials; and
- Prepared this report documenting the field activities and the results of the investigation including analytical results, conclusions, and recommendations.

4.0 METHODOLOGY

4.1 Asbestos

ETC personnel collected a total of twenty-seven (27) samples of suspected ACM for asbestos analysis. The suspected ACM samples were collected from random areas of the Subject Site in accordance with EPA guidelines and recommendations.

The suspected ACM were wetted with amended water before sample collection. A small piece was then carefully cut out and placed into a labeled re-sealable plastic bag. The sampling equipment was cleaned between each sample collection to avoid cross-contamination between samples. The approximate quantity of each suspected ACM was noted. Sample locations were randomly selected in accordance with EPA protocols and recommendations.

The asbestos samples were properly logged and recorded following strict chain of custody procedure and submitted to EMC in Phoenix, Arizona for analysis by PLM in accordance with EPA Method 600/R-93/116. EMC is accredited for bulk asbestos analysis through successful participation in the National Voluntary Lab Accreditation Program (NVLAP).

4.2 Lead Paint

ETC personnel collected and analyzed five (5) paint chip samples from the Subject Site in accordance with the EPA guidelines and recommendations.

The suspected lead-containing paints were wetted with amended water before sample collection. Paint was carefully scraped and placed into a labeled re-sealable plastic bag. The sampling equipment was cleaned between each sample collection to avoid cross-contamination between samples. Samples were properly logged and recorded following strict chain of custody procedure and submitted to EMC for analysis in accordance with EPA Method 7420.

5.0 RESULTS

5.1 Asbestos

Of the materials sampled, four (4) contained levels of asbestos above the regulatory limit of 1%. The results of this analysis are contained in Table 1 found in Appendix I.

In accordance with federal and state regulations and industry standard practice ETC determined homogenous areas of each suspect material and collected multiple representative samples of the material from each homogenous area. Typically, all samples for a suspect material will have similar laboratory results. When the results differ, a single result above the regulatory limit is sufficient to determine that the material within the homogenous area is ACM and the entirety of the homogenous area should be treated as ACM. Thus, ETC may request that the laboratory stops analyzing when the first sample in the set is determined to have an asbestos content above 1%. Seven (7) samples were not analyzed for this reason.

In addition, one (1) sample contained glass fibers. Although materials containing such fibers are not specifically regulated, it is ETC's recommendation to handle materials containing glass fibers with appropriate protective equipment.

5.2 Lead Paint

One (1) sampled paint contained lead in excess of the EPA/ United States Department of Housing and Urban Development (HUD) guideline of 0.5% by weight defining Lead-Based Paint (LBP). Three (3) sampled surfaces contained detectable levels of lead at levels less than 0.5% by weight, classifying Lead Containing Paint (LCP). The remaining sampled paint did not contain lead above the laboratory detection limit and is not considered to be lead containing. The results of this analysis are contained in Table 2 found in Appendix I.

6.0 DISCUSSION AND RECOMMENDATIONS

Based on ETC's visual inspection of the facility, inventory of potentially hazardous materials, and laboratory data, ETC recommends the following:

- Manage and/or remove and dispose of hazardous and regulated materials in accordance with applicable local, state, and federal regulations, prior to renovation and/or demolition activities that may disturb these materials.
- Handle materials containing glass fibers with appropriate protective equipment to prevent inhalation or ingestion of fibers and contact with skin and mucous membranes.
- All friable ACM must be removed and disposed of by a qualified asbestos abatement contractor. Friable ACM is defined as those materials that may be crumbled, pulverized, or otherwise damaged by hand pressure.
- Any non-friable ACM which could be crumbled and pulverized during renovation/demolition activities must be removed and disposed of by a qualified asbestos abatement contractor.
- In addition, the services of a qualified consultant should be obtained to monitor and inspect the removal activities to ensure compliance with applicable Environmental Protection Agency (EPA), Occupational Safety and Health Administration (OSHA), and Hawaii Occupational Safety and Health (HIOSH) regulations pertaining to the handling of ACM.
- Remove and dispose of all lead-containing, including lead-based, paint that may be disturbed during renovation/demolition activities in accordance with applicable local, state, and federal regulations. Note that conditions of paint may have changed since the time of this survey.
- Any abatement and demolition contractor(s) must take appropriate measures to comply with applicable EPA, OSHA and HIOSH regulations pertaining to the handling of lead-containing materials and worker protection. Note that Occupational Safety and Health Administration (OSHA) and Hawaii Occupational Safety and Health (HIOSH) regulate activities that disturb paint containing any detectable concentration of lead.
- Services of a qualified consultant should be obtained to monitor and inspect the removal activities to ensure compliance with applicable Environmental Protection Agency (EPA), OSHA, and HIOSH regulations pertaining to the handling of asbestos and lead-containing paint.
- Have air monitoring conducted for airborne asbestos and lead dust by qualified personnel during any abatement and general renovation/demolition activities of areas that were determined to contain these contaminants.

Appendix I

TABLES OF RESULTS

TABLE 1
ASBESTOS SURVEY RESULTS
HEEIA STATE PARK BANQUET HALL

Sample ID	*Location*	*Material*	*Condition*	*Category*	*Friability*	*Analysis Layer*	*Asbestos Content*
4022-AB-01	Roof	Built Up Roofing	Good	Not Applicable	Not Applicable	All	None Detected
4022-AB-02							None Detected
4022-AB-03							None Detected
4022-AB-04	Roof - Vents	Black Sealant	Good	Not Applicable	Not Applicable	All	None Detected*
4022-AB-05							None Detected
4022-AB-06							None Detected
4022-AB-07	**Roof - Corrugated Roof Panels**	**Gray Sealant**	**Good**	**Misc.**	**Non-Friable I**	**All**	**None Detected**
4022-AB-08						**All**	**Chrysotile 7%**
4022-AB-09						**All**	**Not Analyzed**
4022-AB-10	Roof - Corrugated Roof Panels	White Sealant	Good	Not Applicable	Not Applicable	All	None Detected
4022-AB-11							None Detected
4022-AB-12							None Detected
4022-AB-13	Roof -Gutter	White Sealant	Good	Not Applicable	Not Applicable	All	None Detected
4022-AB-14							None Detected
4022-AB-15							None Detected
4022-AB-16	**Banquet Hall**	**Pink Drywall Walls**	**Significantly Damaged**	**Misc.**	**Friable**	**Drywall**	**None Detected**
						Joint	**Chrysotile 3%**
4022-AB-17						**All**	**Not Analyzed**
4022-AB-18							**Not Analyzed**
4022-AB-19	**Banquet Hall**	**White Drywall Ceiling**	**Damaged**	**Misc.**	**Non-Friable I**	**Drywall**	**None Detected**
						Joint	**Chrysotile 3%**
4022-AB-20						**All**	**Not Analyzed**
4022-AB-21							**Not Analyzed**
4022-AB-22	Banquet Hall - Exterior	CMU Wall with Grout and Textured Paint	Good	Not Applicable	Not Applicable	All	None Detected
4022-AB-23							None Detected
4022-AB-24							None Detected
4022-AB-25	**Banquet Hall**	**White Drywall Walls**	**Significantly Damaged**	**Misc.**	**Friable**	**Drywall**	**None Detected**
						Joint	**Chrysotile 3%**
4022-AB-26						**All**	**Not Analyzed**
4022-AB-27							**Not Analyzed**

** Glass Fibers Detected*

TABLE 2
LEAD PAINT SURVEY RESULTS
HEEIA STATE PARK BANQUET HALL

Sample ID	*Location*	*Color*	*Description*	*Condition*	*Reporting Limit (%Pb by Weight)*	*Lead Concentration (%Pb by Weight)*
4022-Pb-01	**Roof**	**Yellow**	**Metal Ridge**	**Poor**	**0.010**	**0.728**
4022-Pb-02	Roof	Tan	Corrugated Metal Panels	Fair	0.010	0.029
4022-Pb-03	Interior/ Exterior	White	Drywall Walls and Ceiling	Poor	0.010	BRL
			Wood Ceiling			
			CMU Walls			
			Metal Posts			
4022-Pb-04	Interior/ Exterior	Brown	Wood Beams, Walls, Doors	Fair	0.010	0.010
			Metal Conduits and Gutter			
4022-Pb-05	Exterior	Tan	CMU and Wood Walls	Fair	0.010	0.296
			Metal Conduits			

Appendix II

LABORATORY ANALYTICAL RESULTS AND CHAIN-OF-CUSTODY FORMS

EMC LABS, INC.

9830 S. 51st Street, Suite B109, Phoenix, AZ 85044
Phone: 800-362-3373 or 480-940-5294 - Fax: (480) 893-1726

Laboratory Report
0168295

Bulk Asbestos Analysis by Polarized Light Microscopy

NVLAP#101926-0

Client:	ENVIROSERVICES & TRAINING CENTER	Job# / P.O. #:	16-4022
Address:	505 WARD AVE, STE 202	Date Received:	03/25/2016
	HONOLULU HI 96814	Date Analyzed:	03/30/2016
Collected:	03/24/2016	Date Reported:	03/30/2016
Project Name:	PARK IMPROVEMENTS, HEEIA STATE PARK	EPA Method:	EPA 600/R-93/116
		Submitted By:	CELENA FREITAS
Address:			
		Collected By:	

Lab ID Client ID	Sample Location	Layer Name / Sample Description	Asbestos Detected	Asbestos Type (%)	Non-Asbestos Constituents	
0168295-001 4022-AB-01		Built Up Roofing, Black/ White	No	None Detected	Synthetic Fiber	20%
					Carbonates	
					Gypsum	
					Quartz	
					Binder/Filler	80%
0168295-002 4022-AB-02		Built Up Roofing, Black/ White	No	None Detected	Synthetic Fiber	20%
					Carbonates	
					Gypsum	
					Quartz	
					Binder/Filler	80%
0168295-003 4022-AB-03		Built Up Roofing, Black/ White	No	None Detected	Synthetic Fiber	20%
					Carbonates	
					Gypsum	
					Quartz	
					Binder/Filler	80%
0168295-004 4022-AB-04		Sealant, Black	No	None Detected	Cellulose Fiber	1%
					Fibrous Glass	<1%
					Carbonates	
					Gypsum	
					Quartz	
					Binder/Filler	98%
0168295-005 4022-AB-05		Sealant, Black	No	None Detected	Cellulose Fiber	8%
					Carbonates	
					Gypsum	
					Quartz	
					Binder/Filler	92%
0168295-006 4022-AB-06		Sealant, Black	No	None Detected	Cellulose Fiber	8%
					Carbonates	
					Gypsum	
					Quartz	
					Binder/Filler	92%

EMC LABS, INC.

9830 S. 51st Street, Suite B109, Phoenix, AZ 85044
Phone: 800-362-3373 or 480-940-5294 - Fax: (480) 893-1726

Laboratory Report
0168295

Bulk Asbestos Analysis by Polarized Light Microscopy

NVLAP#101926-0

Client:	ENVIROSERVICES & TRAINING CENTER	Job# / P.O. #:	16-4022
Address:	505 WARD AVE, STE 202	Date Received:	03/25/2016
	HONOLULU HI 96814	Date Analyzed:	03/30/2016
Collected:	03/24/2016	Date Reported:	03/30/2016
Project Name:	PARK IMPROVEMENTS, HEEIA STATE PARK	EPA Method:	EPA 600/R-93/116
		Submitted By:	CELENA FREITAS
Address:			
		Collected By:	

Lab ID Client ID	Sample Location	Layer Name / Sample Description	Asbestos Detected	Asbestos Type (%)	Non-Asbestos Constituents	
0168295-007 4022-AB-07		Sealant, Gray	No	None Detected	Cellulose Fiber	<1%
					Carbonates Gypsum Quartz Binder/Filler	99%
0168295-008 4022-AB-08		Sealant, Gray/ Black	Yes	Chrysotile 7%		
					Carbonates Gypsum Quartz Binder/Filler	93%
0168295-009 4022-AB-09		Sealant, Gray/ Black Note: *Not analyzed per client request				
0168295-010 4022-AB-10		Sealant, White/ Off White	No	None Detected	Cellulose Fiber	<1%
					Carbonates Gypsum Quartz Binder/Filler	99%
0168295-011 4022-AB-11		Sealant, White/ Off White	No	None Detected		
					Carbonates Gypsum Quartz Binder/Filler	100%
0168295-012 4022-AB-12		Sealant, White/ Off White	No	None Detected	Cellulose Fiber	<1%
					Carbonates Gypsum Quartz Binder/Filler	99%

EMC LABS, INC.

9830 S. 51st Street, Suite B109, Phoenix, AZ 85044
Phone: 800-362-3373 or 480-940-5294 - Fax: (480) 893-1726

Laboratory Report
0168295

Bulk Asbestos Analysis by Polarized Light Microscopy

NVLAP#101926-0

Client:	ENVIROSERVICES & TRAINING CENTER	Job# / P.O. #:	16-4022
Address:	505 WARD AVE, STE 202	Date Received:	03/25/2016
	HONOLULU HI 96814	Date Analyzed:	03/30/2016
Collected:	03/24/2016	Date Reported:	03/30/2016
Project Name:	PARK IMPROVEMENTS, HEEIA STATE PARK	EPA Method:	EPA 600/R-93/116
		Submitted By:	CELENA FREITAS
Address:			
		Collected By:	

Lab ID Client ID	Sample Location	Layer Name / Sample Description	Asbestos Detected	Asbestos Type (%)	Non-Asbestos Constituents	
0168295-013 4022-AB-13		Sealant, White/ Off White	No	None Detected		
					Carbonates Quartz Binder/Filler	100%
0168295-014 4022-AB-14		Sealant, White/ Off White	No	None Detected	Cellulose Fiber	<1%
					Carbonates Quartz Binder/Filler	99%
0168295-015 4022-AB-15		Sealant, White/ Off White	No	None Detected		
					Carbonates Quartz Binder/Filler	100%
0168295-016 4022-AB-16		LAYER 1 Drywall, Off White/ Brown	No	None Detected	Cellulose Fiber	12%
					Gypsum Quartz Carbonates	88%
		LAYER 2 Joint Compound, White/ Off White/ Lt. Pink	Yes	Chrysotile 3%		
					Carbonates Mica Quartz Binder/Filler	97%
0168295-017 4022-AB-17		LAYER 1 Drywall, Off White/ Brown Note: *Not analyzed per client request				
		LAYER 2 Joint Compound, White/ Off White/ Lt. Pink Note: *Not analyzed per client request				

EMC LABS, INC.

9830 S. 51st Street, Suite B109, Phoenix, AZ 85044
Phone: 800-362-3373 or 480-940-5294 - Fax: (480) 893-1726

Laboratory Report
0168295

Bulk Asbestos Analysis by Polarized Light Microscopy

NVLAP#101926-0

Client:	ENVIROSERVICES & TRAINING CENTER	Job# / P.O. #:	16-4022
Address:	505 WARD AVE, STE 202	Date Received:	03/25/2016
	HONOLULU HI 96814	Date Analyzed:	03/30/2016
Collected:	03/24/2016	Date Reported:	03/30/2016
Project Name:	PARK IMPROVEMENTS, HEEIA STATE PARK	EPA Method:	EPA 600/R-93/116
		Submitted By:	CELENA FREITAS
Address:			
		Collected By:	

Lab ID Client ID	Sample Location	Layer Name / Sample Description	Asbestos Detected	Asbestos Type	(%)	Non-Asbestos Constituents	
0168295-018 4022-AB-18		LAYER 1 Drywall, Off White/ Brown Note: *Not analyzed per client request					
		LAYER 2 Joint Compound, White/ Off White/ Lt. Pink Note: *Not analyzed per client request					
0168295-019 4022-AB-19		LAYER 1 Drywall, Off White/ Brown	No	None Detected		Cellulose Fiber	12%
						Gypsum Quartz Carbonates	88%
		LAYER 2 Joint Compound, White/ Off White	Yes	Chrysotile	3%		
						Carbonates Mica Quartz Binder/Filler	97%
0168295-020 4022-AB-20		LAYER 1 Drywall, Off White/ Brown Note: *Not analyzed per client request					
		LAYER 2 Joint Compound, White/ Off White Note: *Not analyzed per client request					
0168295-021 4022-AB-21		LAYER 1 Drywall, Off White/ Brown Note: *Not analyzed per client request					
		LAYER 2 Joint Compound, White/ Off White Note: *Not analyzed per client request					

EMC LABS, INC.

9830 S. 51st Street, Suite B109, Phoenix, AZ 85044
Phone: 800-362-3373 or 480-940-5294 - Fax: (480) 893-1726

Laboratory Report
0168295

Bulk Asbestos Analysis by Polarized Light Microscopy

NVLAP#101926-0

Client:	ENVIROSERVICES & TRAINING CENTER	Job# / P.O. #:	16-4022
Address:	505 WARD AVE, STE 202	Date Received:	03/25/2016
	HONOLULU HI 96814	Date Analyzed:	03/30/2016
Collected:	03/24/2016	Date Reported:	03/30/2016
Project Name:	PARK IMPROVEMENTS, HEEIA STATE PARK	EPA Method:	EPA 600/R-93/116
		Submitted By:	CELENA FREITAS
Address:			
		Collected By:	

Lab ID Client ID	Sample Location	Layer Name / Sample Description	Asbestos Detected	Asbestos Type	Non-Asbestos Constituents	(%)
0168295-022 4022-AB-22		LAYER 1 CMU, Beige/ Gray	No	None Detected		
					Carbonates Quartz Gypsum Binder/Filler	100%
		LAYER 2 Grout, White/ Gray	No	None Detected	Cellulose Fiber	<1%
					Carbonates Gypsum Quartz Binder/Filler	99%
		LAYER 3 Paint, Black/ Tan Note: Difficult to separate adjacent layers	No	None Detected		
					Carbonates Gypsum Quartz Binder/Filler	100%
0168295-023 4022-AB-23		LAYER 1 CMU, Beige/ Gray	No	None Detected		
					Carbonates Quartz Gypsum Binder/Filler	100%
		LAYER 2 Grout, White/ Gray Note: Very small amount of sample	No	None Detected		
					Carbonates Gypsum Quartz Binder/Filler	100%
		LAYER 3 Paint, Tan Note: Difficult to separate adjacent layers	No	None Detected	Cellulose Fiber	<1%
					Carbonates Gypsum Quartz Binder/Filler	99%

EMC LABS, INC.

9830 S. 51st Street, Suite B109, Phoenix, AZ 85044
Phone: 800-362-3373 or 480-940-5294 - Fax: (480) 893-1726

Laboratory Report
0168295

Bulk Asbestos Analysis by Polarized Light Microscopy

NVLAP#101926-0

Client:	ENVIROSERVICES & TRAINING CENTER	Job# / P.O. #:	16-4022
Address:	505 WARD AVE, STE 202	Date Received:	03/25/2016
	HONOLULU HI 96814	Date Analyzed:	03/30/2016
Collected:	03/24/2016	Date Reported:	03/30/2016
Project Name:	PARK IMPROVEMENTS, HEEIA STATE PARK	EPA Method:	EPA 600/R-93/116
		Submitted By:	CELENA FREITAS
Address:			
		Collected By:	

Lab ID Client ID	Sample Location	Layer Name / Sample Description	Asbestos Detected	Asbestos Type (%)	Non-Asbestos Constituents	
0168295-024 4022-AB-24		LAYER 1 CMU, Beige/ Gray	No	None Detected		
					Carbonates Quartz Gypsum Binder/Filler	100%
		LAYER 2 Grout, White/ Gray Note: Very small amount of sample	No	None Detected		
					Carbonates Gypsum Quartz Binder/Filler	100%
		LAYER 3 Paint, Tan Note: Difficult to separate adjacent layers	No	None Detected	Cellulose Fiber	<1%
					Carbonates Gypsum Quartz Binder/Filler	99%
0168295-025 4022-AB-25		LAYER 1 Drywall, Off White/ Brown	No	None Detected	Cellulose Fiber	12%
					Gypsum Quartz Carbonates	88%
		LAYER 2 Joint Compound, White/ Off White	Yes	Chrysotile 3%		
					Carbonates Mica Quartz Binder/Filler	97%
0168295-026 4022-AB-26		LAYER 1 Drywall, Off White/ Brown Note: *Not analyzed per client request				
		LAYER 2 Joint Compound, White/ Off White Note: *Not analyzed per client request				

EMC LABS, INC.

9830 S. 51st Street, Suite B109, Phoenix, AZ 85044
Phone: 800-362-3373 or 480-940-5294 - Fax: (480) 893-1726

Laboratory Report
0168295

Bulk Asbestos Analysis by Polarized Light Microscopy

NVLAP#101926-0

Client:	ENVIROSERVICES & TRAINING CENTER	Job# / P.O. #:	16-4022
Address:	505 WARD AVE, STE 202	Date Received:	03/25/2016
	HONOLULU HI 96814	Date Analyzed:	03/30/2016
Collected:	03/24/2016	Date Reported:	03/30/2016
Project Name:	PARK IMPROVEMENTS, HEEIA STATE PARK	EPA Method:	EPA 600/R-93/116
		Submitted By:	CELENA FREITAS
Address:			
		Collected By:	

Lab ID Client ID	Sample Location	Layer Name / Sample Description	Asbestos Detected	Asbestos Type (%)	Non-Asbestos Constituents
0168295-027 4022-AB-27		LAYER 1 Drywall, Off White/ Brown Note: *Not analyzed per client request LAYER 2 Joint Compound, White/ Off White Note: *Not analyzed per client request			

Analyst - Kurt Kettler

Signatory - Lab Manager - Ken Scheske

Distinctly stratified, easily separable layers of samples are analyzed as subsamples of the whole and are reported separately for each discernible layer. All analyses are derived from calibrated visual estimate and measured in area percent unless otherwise noted. The report applies to the standards or procedures identified and to the sample(s) tested. The test results are not necessarily indicated or representative of the qualities of the lot from which the sample was taken or of apparently identical or similar products, nor do they represent an ongoing quality assurance program unless so noted. These reports are for the exclusive use of the addressed client and that they will not be reproduced wholly or in part for advertising or other purposes over our signature or in connection with our name without special written permission. The report shall not be reproduced except in full, without written approval by our laboratory. The samples not destroyed in testing are retained a maximum of thirty days. The laboratory measurement of uncertainty for the test method is approximately less than 1 by area percent. Accredited by the National Institute of Standards and Technology, Voluntary Laboratory Accreditation Program for selected test method for asbestos. The accreditation or any reports generated by this laboratory in no way constitutes or implies product certification, approval, or endorsement by the National Institute of Standards and Technology. The report must not be used by the client to claim product certification, approval, or endorsement by NVLAP, NIST, or any agency of the Federal Government. Polarized Light Microscopy may not be consistently reliable in detecting asbestos in floor coverings and similar non-friable organically bound materials.

CHAIN OF CUSTODY

EMC Labs, Inc.
9830 S. 51st St., Ste B-109
Phoenix, AZ 85044
(800) 362-3373 Fax (480) 893-1726

LAB#: 168295
TAT: 3 days
Rec'd: MAR 25 P.M.

COMPANY NAME: ENVIROSERVICES & TRAINING CENTER, LLC
505 Ward Ave. Suite #202
Honolulu, HI 96814
CONTACT: Vel Roberts
Phone/Fax: (808) 839-7222 ext 232/(808) 839-4455
Email: vel@gotoetc.com

BILL TO: (If Different Location)
Trina Oshiro

Now Accepting: VISA – MASTERCARD

Price Quoted: $ _____ / Sample $_____ / Layers

COMPLETE ITEMS 1-4: (Failure to complete any items may cause a delay in processing or analyzing your samples)

1. TURNAROUND TIME: [Same Day RUSH] [1-Day] [2-Day] [3-4-5 Day] [6-10 Day]

****Prior confirmation of turnaround time is required
****Additional charges for rush analysis (please call marketing department for pricing details)
****Laboratory analysis may be subject to delay if credit terms are not met

2. TYPE OF ANALYSIS: [Bulk-PLM] [Air-PCM] [Lead] [Point Count] [Fungi: AOC, W-C, Bulk, Swab, Tape]

3. DISPOSAL INSTRUCTIONS: [Dispose of samples at EMC] / [Return samples to me at my expense]
(If you do not indicate preference, EMC will dispose of samples 60 days from analysis.)

4. Project Name: Park Improvements, Heela State Park
P.O. Number: _____ **Project Number:** 16-4022

EMC SAMPLE #	CLIENT SAMPLE #	DATE & TIME SAMPLED	LOCATION/MATERIAL TYPE	Samples Accepted Yes / No	AIR SAMPLE INFO / COMMENTS ON	OFF	FLOW RATE
1,2,3	4022-AB-01-03	3/24/16	Built Up Roofing	Y N			
4,5,6	4022-AB-04-06		Black Sealant on Soffit Vents	Y N			
7,8,9	4022-AB-07-09		Gray Sealant on Corr. Roof panels	Y N			
10,11,12	4022-AB-10-12		White Sealant on Corr. Roof Panels	Y N			
13,14,15	4022-AB-13-15		White Sealant on Gutters	Y N			
16,17,18	4022-AB-16-18		Drywall Walls (PINK)	Y N			
19,20,21	4022-AB-19-21		Drywall Ceiling	Y N			
22,23,24	4022-AB-22-24		CMU Wall w/ grout & text.	Y N			
			paint (EXT.)	Y N			
25,26,27	4022-AB-25-27		Drywall Walls (White)	Y N			
				Y N			
				Y N			

SPECIAL INSTRUCTIONS: Please Stop At First Positive . Please Include All Layers in Analysis.

Sample Collector: (Print) CELENA FREITAS (Signature) [signature]

Relinquished by: [signature] Date/Time 3/24/16 Received by: Diana Federico Date/Time: 3/25/16

Relinquished by: Diana Federico Date/Time: 3/25/16 Received by: [signature] Date/Time: 3/25/16

Relinquished by: _____ Date/Time _____ Received by: _____ Date/Time: _____

** In the event of any dispute between the above parties for these services or otherwise, parties agree that jurisdiction and venue will be in Phoenix, Arizona and prevailing party will be entitled to attorney's fees and court costs.

Rev. 09/27/08

EMC LABS, INC.

9830 South 51st Street, Suite B-109 / PHOENIX, ARIZONA 85044 / 480-940-5294 or 800-362-3373 / FAX 480-893-1726
emclab@emclabs.com

LEAD (Pb) IN PAINT CHIP SAMPLES

EMC SOP METHOD #L01/1 EPA SW-846 METHOD 7420

EMC LAB #:	L59287	**DATE RECEIVED:**	03/25/16
CLIENT:	Enviroservices & Training Center, LLC	**REPORT DATE:**	03/30/16
		DATE OF ANALYSIS:	03/29/16
CLIENT ADDRESS:	505 Ward Ave. Suite #202 Honolulu, HI 96814	**P.O. NO.:**	
PROJECT NAME:	Park Improvements, Heeia State Park	**PROJECT NO.:**	

EMC # L59287-	SAMPLE DATE /16	CLIENT SAMPLE #	DESCRIPTION	REPORTING LIMIT (%Pb by weight)	%Pb BY WEIGHT
1	03/24	4022-Pb-01	Yellow – Corr. Metal Roof	0.010	0.728
2	03/24	4022-Pb-02	Tan – Corr. Metal Roof	0.010	0.029
3	03/24	4022-Pb-03	White – Drywall Wood, CMU (Int./Ext.)	0.010	BRL
4	03/24	4022-Pb-04	Brown – Wood (Int./Ext.)	0.010	0.010
5	03/24	4022-Pb-05	Tan – CMU, Wood, Metal (Ext.)	0.010	0.296

^ = Dilution Factor Changed * = Excessive Substrate May Bias Sample Results **BRL** = Below Reportable Limits # = Very Small Amount Of Sample Submitted, May Affect Result

This report applies to the standards or procedures identified and to the samples tested only. The test results are not necessarily indicative or representative of the qualities of the lot from which the sample was taken or of apparently identical or similar products, nor do they represent an ongoing quality assurance program unless so noted. Unless otherwise noted, all quality control analyses for the samples noted above were within acceptable limits.

Where it is noted that a sample with excessive substrate was submitted for laboratory analysis, such analysis may be biased. The lead content of such sample may, in actuality, be greater than reported. EMC makes no warranty, express or implied, as to the accuracy of the analysis of samples noted to have been submitted with excessive substrate. Resampling is recommended in such situations to verify original laboratory results.

These reports are for the exclusive use of the addressed client and are rendered upon the condition that they will not be reproduced wholly or in part for advertising or other purposes over our signature or in connection with our name without special written permission. Samples not destroyed in testing are retained a maximum of sixty (60) days.

ANALYST: Jason Thompson

QA COORDINATOR: Kurt Kettler

Rev. 11/30/08

CHAIN OF CUSTODY

EMC Labs, Inc.
9830 S. 51st St., Ste B-109
Phoenix, AZ 85044
(800) 362-3373 Fax (480) 893-1726

LAB#: A59287
TAT: 3-day
Rec'd: 3/25/16

COMPANY NAME: ENVIROSERVICES & TRAINING CENTER, LLC
505 Ward Ave. Suite #202
Honolulu, HI 96814
CONTACT: Vel Roberts
Phone/Fax: (808) 839-7222 ext 232/(808) 839-4455
Email: vel@gotoetc.com

BILL TO: (If Different Location)
Trina Oshiro

Now Accepting: VISA – MASTERCARD

Price Quoted: $ _____ / Sample $_____ / Layers

COMPLETE ITEMS 1-4: (Failure to complete any items may cause a delay in processing or analyzing your samples)

1. TURNAROUND TIME: [Same Day RUSH] [1-Day] [2-Day] [3-4-5 Day] [6-10 Day]

****Prior confirmation of turnaround time is required
****Additional charges for rush analysis (please call marketing department for pricing details)
****Laboratory analysis may be subject to delay if credit terms are not met

2. TYPE OF ANALYSIS: [Bulk-PLM] [Air-PCM] [Lead] [Point Count] [Fungi: AOC, W-C, Bulk, Swab, Tape]

3. DISPOSAL INSTRUCTIONS: [Dispose of samples at EMC] / [Return samples to me at my expense]
(If you do not indicate preference, EMC will dispose of samples 60 days from analysis.)

4. Project Name: Park Improvements, Heeia State Park
P.O. Number: _____ **Project Number:** 16-4022

EMC SAMPLE #	CLIENT SAMPLE #	DATE & TIME SAMPLED	LOCATION/MATERIAL TYPE	Samples Accepted Yes / No	AIR SAMPLE INFO / COMMENTS ON	OFF	FLOW RATE
1	4022-Pb-01	3/24/16	Yellow-corr. metal roof	Y N			
2	4022-Pb-02		Tan-corr. metal roof	Y N			
3	4022-Pb-03		White-Drywall, Wood, CMU (int/ext)	Y N			
4	4022-Pb-04		Brown-Wood (int./ext.)	Y N			
5	4022-Pb-05		Tan-CMU, wood, metal (ext.)	Y N			
				Y N			
				Y N			
				Y N			
				Y N			
				Y N			
				Y N			
				Y N			

SPECIAL INSTRUCTIONS: ~~Please Stop At First Positive - Please Include All Layers in Analysis.~~

Sample Collector: (Print) CELENA FREITAS (Signature) [signature]

Relinquished by: [signature] Date/Time: 3/24/16 Received by: [signature] Date/Time: 3/25/16

Relinquished by: [signature] Date/Time: 3/25/16 Received by: [signature] Date/Time: 3/25/16

Relinquished by: _____ Date/Time _____ Received by: _____ Date/Time: _____

** In the event of any dispute between the above parties for these services or otherwise, parties agree that jurisdiction and venue will be in Phoenix, Arizona and prevailing party will be entitled to attorney's fees and court costs.

Appendix III

PHOTOGRAPHIC DOCUMENTATION

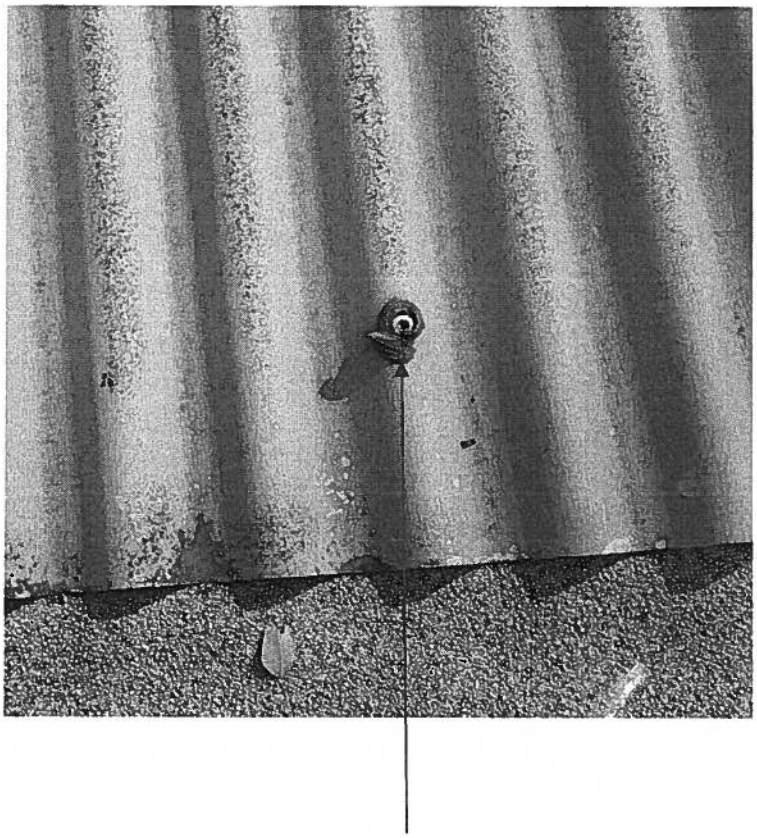

Sample No. 4022-AB-07-09 Gray Sealant on Corrugated Roof Panels

Sample No. 4022-AB-16-18
Pink Drywall Walls with Joint Compound

Sample No. 4022-AB-19-21
White Drywall Ceiling

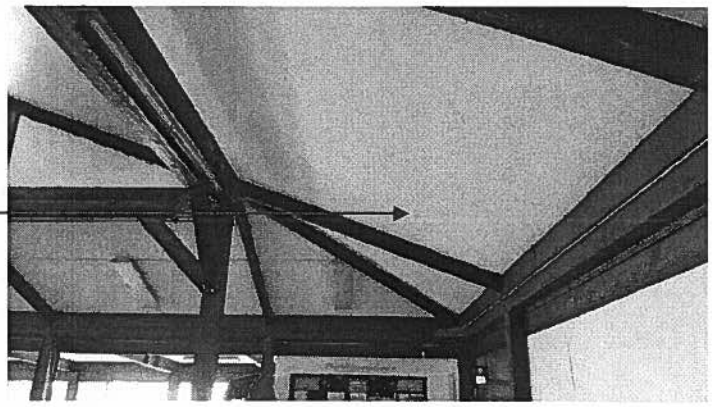

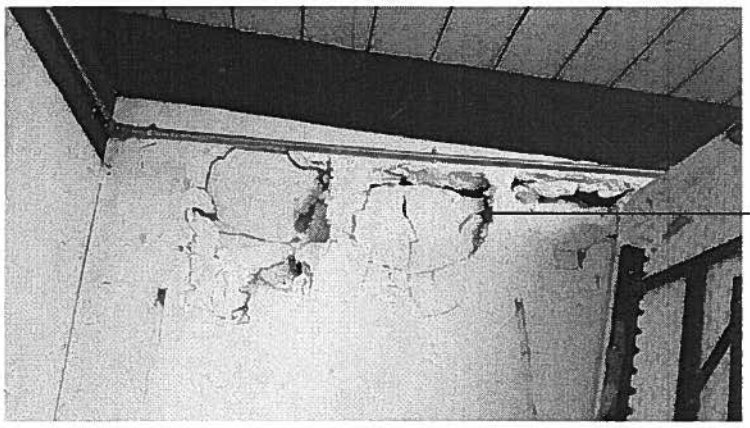

Sample No. 4022-AB-25-27
White Drywall Walls

Appendix IV

SAMPLE LOCATION MAPS

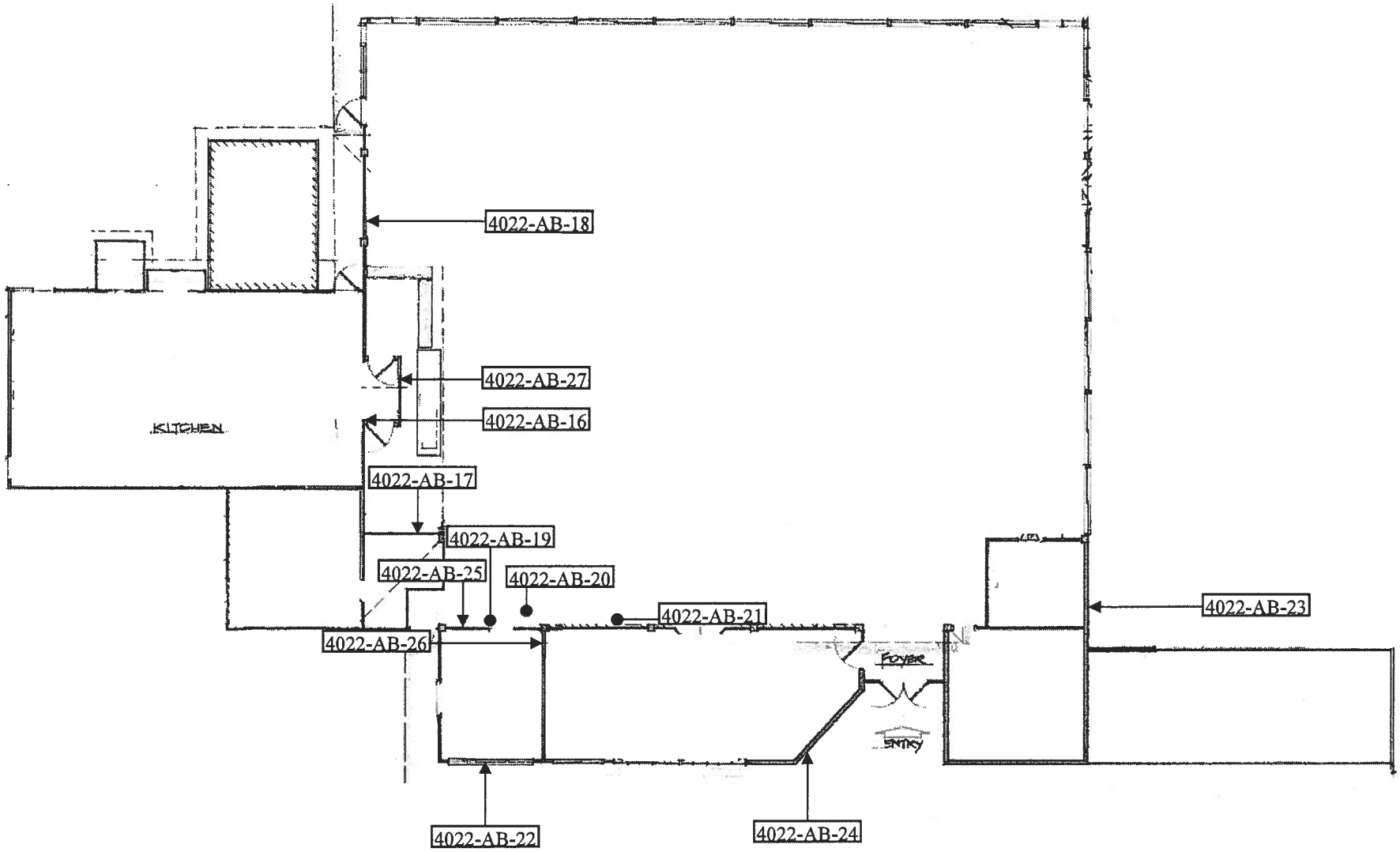

Legend

4022-AB-XX	Asbestos Containing
4022-AB-XX	Non-Asbestos Containing
4022-AB-XX	Not Analyzed
←	Wall Sample
●—	Non-Wall Sample

enviro SERVICES & TRAINING CENTER, LLC

ETC Project No. 16-4022

March 2016

ASBESTOS SAMPLE LOCATION MAP
Heeia State Park, Banquet Hall
Banquet Hall Improvements
Kaneohe, Oahu, Hawaii

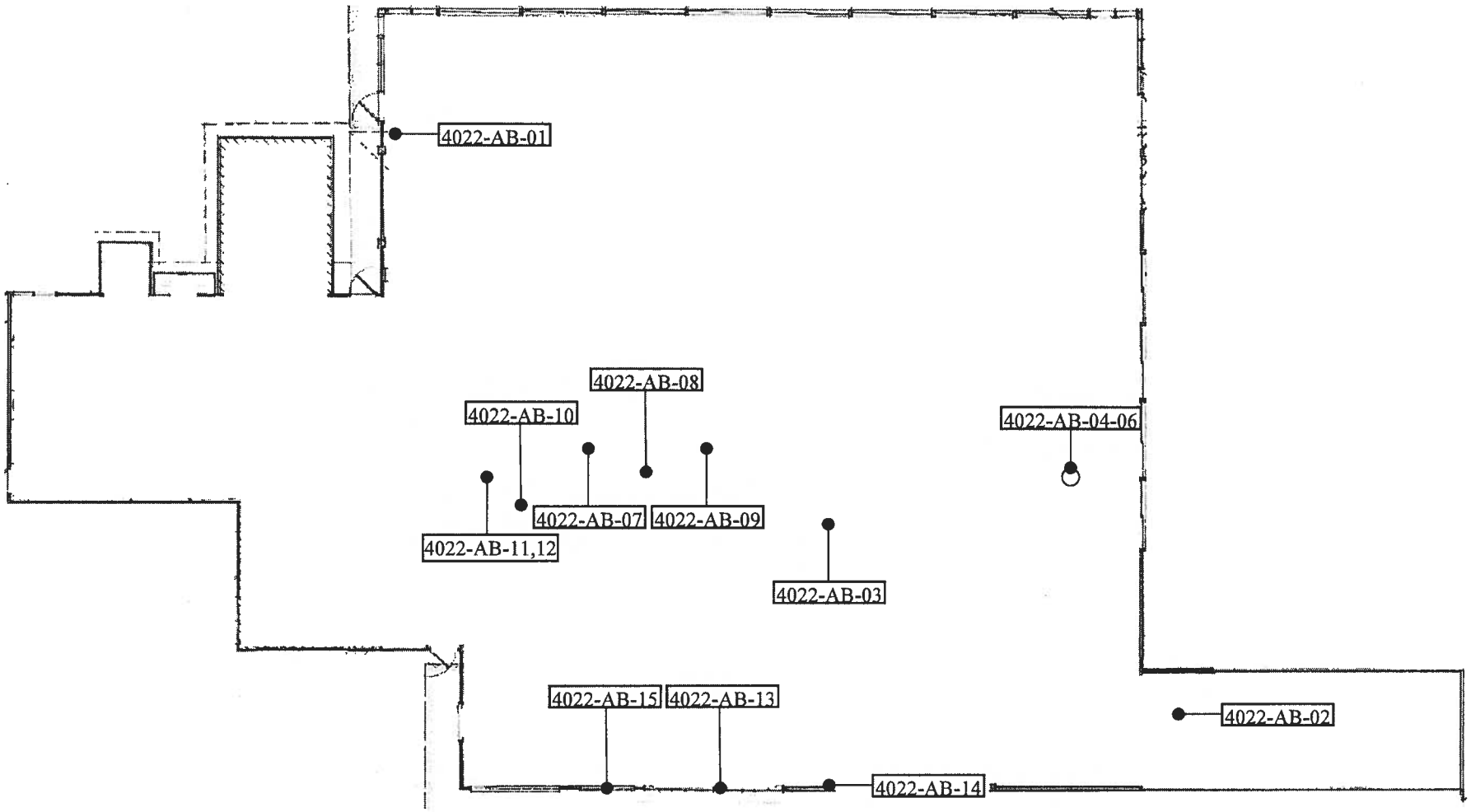

Legend

4022-AB-XX	Asbestos Containing
4022-AB-XX	Non-Asbestos Containing
4022-AB-XX	Not Analyzed
←	Wall Sample
●	Non-Wall Sample

enviro SERVICES & TRAINING CENTER, LLC

ETC Project No. 16-4022

March 2016

ASBESTOS SAMPLE LOCATION MAP
Heeia State Park, Roof
Banquet Hall Improvements
Kaneohe, Oahu, Hawaii

DIVISION 2 – SITE WORK

SECTION 02050

DEMOLITION

PART 1 - GENERAL

1.1 GENERAL REQUIREMENTS: The work includes demolition and removal as indicated in the plans or specified herein. All materials resulting from demolition work, except as indicated or specified otherwise, shall become the property of the Contractor and shall be removed from the limits of Government property. Remove rubbish and debris from the job site daily, unless otherwise directed. Store materials which cannot be removed daily in areas specified by the Engineer. The Contractor shall pay for all necessary permits and certificates that may be required in connection with this work.

1.2 SUBMITTALS: Submit proposed demolition and removal procedures to the Engineer for approval before work is started. Procedures shall provide for coordination with other work in progress and a detailed description of methods and equipment to be used for each operation, and sequence of operations.

1.3 DUST CONTROL: Take appropriate action to check the spread of dust to the surrounding area and to avoid the creation of a nuisance in the surrounding area. Do not use water if it results in hazardous or objectionable conditions, such as flooding or pollution. Comply with all dust regulations imposed by local air pollution agencies.

1.4 PROTECTION

A. Existing Improvements: Protect existing improvements that are to remain in place, that are to be reused, or that is to remain the property of the Engineer by temporary covers, shoring, bracing, and supports. Repair items damaged during performance of the work or replace with new to the satisfaction of the Engineer. Do not overload structural elements. Provide new supports or reinforcement for existing construction weakened by demolition, removal, and relocation work. Construction equipment and vehicles shall neither be permitted on, nor shall be stored on the existing work that is to remain in place.

B. Trees: Protect trees within the project site which might be damaged during the demolition work.

C. Public Safety: Where pedestrian and driver safety is endangered in the work or storage areas, use traffic barricades with flashing lights. Notify the Engineer prior to beginning any such work. The Contractor shall conduct operations with minimum interference to streets, driveways, sidewalks, and passageways, etc..

D. Explosives: Use of explosives will not be permitted.

PART 2 - PRODUCTS (NOT USED)

PART 3 - EXECUTION

3.1 EXISTING FACILITIES

A. Demolish and remove portions of existing building that is above grade and of non-concrete material as indicated on the plans.

B. The existing slab-on-grade and below grade utilities shall be secured (capped) and remain in place. Seal and cap utility lines where necessary as required by regulations of the authority having jurisdiction.

C. The existence of active utility lines transversing the construction area other than those indicated is not definitely known. Should any be encountered, the Contractor shall not disconnect same without authorization of the Engineer, but shall inform the latter immediately of each discovery, and shall follow his instructions.

3.2 SAFETY

A. Work shall be done in accordance with safety provisions of the Manual of Accident Prevention in Construction, published by the Associated General Contractors of America.

3.3 DISPOSITION OF MATERIALS

A. Title to Materials: Title to all materials and equipment to be removed, except as specified otherwise, is vested in the Contractor upon receipt of notice to proceed. The Engineer will not be responsible for the condition or loss of, or damage to, such property after notice to proceed. Materials and equipment shall not be viewed by prospective purchasers or sold on the site. Burning or burying of materials on the site will not be permitted.

B. When removing the materials from the property, truck loads shall be trimmed and loaded as to prevent spillage.

3.4 CLEANUP

A. Debris and Rubbish: Remove and transport debris and rubbish in a manner that will prevent spillage into ocean or adjacent areas. Cleanup spillage from ocean and adjacent areas. The Contractor shall leave the premises clean, neat, and orderly.

B. Regulations: Comply with Federal, State, and local hauling and disposal regulations.

END OF SECTION

SECTION 02100

SITE PREPARATION

PART 1 - GENERAL

1.1 GENERAL REQUIREMENTS

The work to be performed under this section shall include clearing the premises of all obstacles and obstructions, the removal of which will be necessary for the proper reception, construction, execution and completion of the other work included in this contract.

1.2 COORDINATION WITH OTHER SECTIONS

A. Section 02050 - Demolition

PART 2 - PRODUCTS (NOT USED)

PART 3 - EXECUTION

3.1 GENERAL

A. Maintenance of Traffic: The Contractor shall conduct operations with minimum interference to streets, driveways, sidewalks, passageways, etc.

When necessary, the Contractor shall provide and erect barriers, etc., with special attention to protection of personnel and public.

B. Protection: Throughout the progress of the work protection shall be provided for all property and equipment, and temporary barricades shall be provided as necessary. Work shall be done in accordance with the safety provisions of the Manual of Accident Prevention in Construction, published by the Associated General Contractors of America, and the State of Hawaii's Occupational Safety and Health Standards, Rules and Regulations.

C. Fires: No burning of fires of any kind will be allowed.

D. Reference Points: Bench marks, etc., shall be carefully maintained, but if disturbed or destroyed, shall be replaced as directed, at the Contractor's expense.

E. Disposal: All materials resultant from operations under this Section shall become the property of the Contractor and shall be removed from the site. Loads of materials shall be trimmed to prevent droppings.

3.2 EXISTING UTILITY LINES

A. The existence of active underground utility lines within the construction area is not definitely known other than those indicated in their approximate locations on the Drawings. Should any unknown line be encountered during the Work, the Contractor shall immediately notify the Engineer of such discovery. The Engineer shall then investigate and issue instructions for the preservation or disposition of the unknown line. Authorization for extra work shall be issued by the Engineer only as he deems necessary.

3.3 CLEARING AND GRUBBING

A. The Contractor shall selectively clear the premises of obstacles and obstructions, the removal of which will be necessary for the proper reception, construction, execution and completion of other work included in this contract.

B. Where indicated on the plans, remove trees/plants and their roots to a minimum of 3 feet below existing ground level. Remove all large roots in excess of 2 inches in diameter, and backfill and compact the resulting depression. All debris accumulated from this operation shall be completely removed from the premises by the Contractor.

C. The Contractor shall trim back any trees/plants that may be obstructing or preventing access to the Work areas. All debris accumulated from this operation shall be completely removed from the premises by the Contractor.

D. The Contractor shall protect from injury and damage all other surrounding trees, plants, etc., and shall leave all in as good as condition as at present. Any damage to existing improvement shall be repaired or replaced by the Contractor to the satisfaction of the Engineer.

3.4 CLEAN UP OF PREMISES

A. Clean up and remove all debris accumulated from building operations from time-to-time as directed. Upon completion of the construction work and before final acceptance of the contract work, remove all surplus materials, equipment, scaffoldings, etc., and leave entire job site raked clean and neat to the satisfaction of the Engineer.

END OF SECTION

DIVISION 5 – METALS

SECTION 05120

STRUCTURAL STEEL FRAMING

PART 1 – GENERAL

1.1 GENERAL REQUIREMENTS

A. Description: This work shall consist of furnishing and installing all structural steel framing in accordance with the requirements of the contract.

1.2 SUMMARY

A. Section Includes:

1. Structural steel.

2. Grout.

1.3 DEFINITIONS

A. Structural Steel: Elements of the structural frame indicated on Drawings and as described in AISC 303, "Code of Standard Practice for Steel Buildings and Bridges."

1.4 COORDINATION

A. Coordinate selection of shop primers with topcoats to be applied over them. Comply with paint and coating manufacturers' written recommendations to ensure that shop primers and topcoats are compatible with one another.

B. Coordinate installation of anchorage items to be embedded in or attached to other construction without delaying the Work. Provide setting diagrams, sheet metal templates, instructions, and directions for installation.

1.5 SUBMITTALS

A. Submit in accordance with Section 01300 - Submittals.

B. Product Data: For each type of product.

C. Shop Drawings: Show fabrication of structural-steel components.

1. Include details of cuts, connections, splices, camber, holes, and other pertinent data.

2. Include embedment Drawings.

3. Indicate welds by standard AWS symbols, distinguishing between shop and field welds, and show size, length, and type of each weld. Show backing bars that are to be removed and supplemental fillet welds where backing bars are to remain.

4. Indicate type, size, and length of bolts, distinguishing between shop and field bolts. Identify pretensioned and slip-critical, high-strength bolted connections.

D. Welding Procedure Specifications (WPSs) and Procedure Qualification Records (PQRs): Provide according to AWS D1.1/D1.1M, "Structural Welding Code - Steel," for each welded joint including the following:

1. Power source (constant current or constant voltage).

2. Electrode manufacturer and trade name, for demand critical welds.

E. Qualification Data: For fabricator.

F. Welding certificates.

G. Paint Compatibility Certificates: From manufacturers of topcoats applied over shop primers, certifying that shop primers are compatible with topcoats.

H. Mill test reports for structural steel, including chemical and physical properties.

I. Product Test Reports: For the following:

1. Bolts, nuts, and washers including mechanical properties and chemical analysis.

2. Shop primers.

3. Nonshrink grout.

J. Survey of existing conditions.

K. Source quality-control reports.

L. Field quality-control and special inspection reports.

1.6 QUALITY ASSURANCE

A. Welding Qualifications: Qualify procedures and personnel according to AWS D1.1/D1.1M, "Structural Welding Code - Steel."

1. Welders and welding operators performing work on bottom-flange, demand-critical welds shall pass the supplemental welder qualification testing, as required by AWS D1.8/D1.8M. FCAW-S and FCAW-G shall be considered separate processes for welding personnel qualification.

B. Comply with applicable provisions of the following specifications and documents:

1. AISC 303.

2. AISC 341 and AISC 341s1.

3. AISC 360.

4. RCSC's "Specification for Structural Joints Using ASTM A 325 or A 490 Bolts."

1.7 DELIVERY, STORAGE, AND HANDLING

A. Store materials to permit easy access for inspection and identification. Keep steel members off ground and spaced by using pallets, dunnage, or other supports and spacers. Protect steel members and packaged materials from corrosion and deterioration.

1. Do not store materials on structure in a manner that might cause distortion, damage, or overload to members or supporting structures. Repair or replace damaged materials or structures as directed.

B. Store fasteners in a protected place in sealed containers with manufacturer's labels intact.

1. Fasteners may be repackaged provided Contractor's testing and inspecting agency observes repackaging and seals containers.

2. Clean and relubricate bolts and nuts that become dry or rusty before use.

3. Comply with manufacturers' written recommendations for cleaning and lubricating ASTM F 1852 fasteners and for retesting fasteners after lubrication.

PART 2 – PRODUCTS

2.1 STRUCTURAL-STEEL MATERIALS

A. Plate and Bar: ASTM A 36.

B. Cold-Formed Hollow Structural Sections: ASTM A 500, Grade B, structural tubing.

2.2 BOLTS, CONNECTORS, AND ANCHORS

A. High-Strength Bolts, Nuts, and Washers: ASTM A 325, Type 1, heavy-hex steel structural bolts; ASTM A 563, Grade C, heavy-hex carbon-steel nuts; and ASTM F 436, Type 1, hardened carbon-steel washers; all with plain finish.

1. Direct-Tension Indicators: ASTM F 959, Type 325, compressible-washer type with plain finish.

B. Threaded Rods: ASTM F 1554, Grade 36, straight.

1. Nuts: ASTM A 563 heavy-hex carbon steel.

2. Washers: ASTM F 436, Type 1, hardened carbon steel.

3. Finish: Plain.

2.3 PRIMER

A. Primer: Fabricator's standard lead- and chromate-free, nonasphaltic, rust-inhibiting primer complying with MPI#79 and compatible with topcoat.

2.4 GROUT

A. Nonmetallic, Shrinkage-Resistant Grout: ASTM C 1107/C 1107M, factory-packaged, nonmetallic aggregate grout, noncorrosive and nonstaining, mixed with water to consistency suitable for application and a 30-minute working time.

2.5 FABRICATION

A. Structural Steel: Fabricate and assemble in shop to greatest extent possible. Fabricate according to AISC 303, "Code of Standard Practice for Steel Buildings and Bridges," and to AISC 360.

1. Fabricate beams with rolling camber up.

2. Identify high-strength structural steel according to ASTM A 6/A 6M and maintain markings until structural steel has been erected.

3. Mark and match-mark materials for field assembly.

4. Complete structural-steel assemblies, including welding of units, before starting shop-priming operations.

B. Thermal Cutting: Perform thermal cutting by machine to greatest extent possible.

1. Plane thermally cut edges to be welded to comply with requirements in AWS D1.1/D1.1M.

C. Bolt Holes: Cut, drill, mechanically thermal cut, or punch standard bolt holes perpendicular to metal surfaces.

D. Finishing: Accurately finish ends of columns and other members transmitting bearing loads.

2.6 SHOP CONNECTIONS

A. High-Strength Bolts: Shop install high-strength bolts according to RCSC's "Specification for Structural Joints Using ASTM A 325 or A 490 Bolts" for type of bolt and type of joint specified.

1. Joint Type: Snug tightened.

B. Weld Connections: Comply with AWS D1.1/D1.1M for tolerances, appearances, welding procedure specifications, weld quality, and methods used in correcting welding work.

1. Assemble and weld built-up sections by methods that maintain true alignment of axes without exceeding tolerances in AISC 303 for mill material.

2.7 SHOP PRIMING

A. Shop prime steel surfaces except the following:

1. Surfaces embedded in concrete or mortar. Extend priming of partially embedded members to a depth of 2 inches (50 mm).

2. Surfaces to be field welded.

3. Surfaces of high-strength bolted, slip-critical connections.

B. Surface Preparation: Clean surfaces to be painted. Remove loose rust and mill scale and spatter, slag, or flux deposits. Prepare surfaces according to the following specifications and standards:

1. SSPC-SP 2, "Hand Tool Cleaning."

2. SSPC-SP 3, "Power Tool Cleaning."

C. Priming: Immediately after surface preparation, apply primer according to manufacturer's written instructions and at rate recommended by SSPC to provide a minimum dry film thickness of 1.5 mils (0.038 mm). Use priming methods that result in full coverage of joints, corners, edges, and exposed surfaces.

1. Stripe paint corners, crevices, bolts, welds, and sharp edges.

2. Apply two coats of shop paint to surfaces that are inaccessible after assembly or erection. Change color of second coat to distinguish it from first.

D. Painting: Prepare steel and apply a one-coat, nonasphaltic primer complying with SSPC-PS Guide 7.00, "Painting System Guide 7.00: Guide for Selecting One-Coat Shop Painting Systems," to provide a dry film thickness of not less than 1.5 mils (0.038 mm).

2.8 SOURCE QUALITY CONTROL

A. Testing Agency: Engage a qualified special inspection agency to perform inspections.

1. Provide inspection agency with access to places where structural-steel work is being fabricated or produced to perform tests and inspections.

B. Bolted Connections: Inspect shop-bolted connections according to RCSC's "Specification for Structural Joints Using ASTM A 325 or A 490 Bolts."

C. Welded Connections: Visually inspect shop-welded connections according to AWS D1.1/D1.1M and the following inspection procedures, at testing agency's option:

1. Liquid Penetrant Inspection: ASTM E 165.

2. Magnetic Particle Inspection: ASTM E 709; performed on root pass and on finished weld. Cracks or zones of incomplete fusion or penetration are not accepted.

3. Ultrasonic Inspection: ASTM E 164.

4. Radiographic Inspection: ASTM E 94.

D. Prepare test and inspection reports.

PART 3 – EXECUTION

3.1 EXAMINATION

A. Verify, with certified steel erector present, elevations of concrete- and masonry-bearing surfaces and locations of anchor rods, bearing plates, and other embedments for compliance with requirements.

1. Prepare a certified survey of existing conditions. Include bearing surfaces, anchor rods, bearing plates, and other embedments showing dimensions, locations, angles, and elevations.

B. Proceed with installation only after unsatisfactory conditions have been corrected.

3.2 PREPARATION

A. Provide temporary shores, guys, braces, and other supports during erection to keep structural steel secure, plumb, and in alignment against temporary construction loads and loads equal in intensity to design loads. Remove temporary supports when permanent structural steel, connections, and bracing are in place unless otherwise indicated.

1. Do not remove temporary shoring supporting composite deck construction until cast-in-place concrete has attained its design compressive strength.

3.3 ERECTION

A. Set structural steel accurately in locations and to elevations indicated and according to AISC 303 and AISC 360.

B. Baseplates: Clean concrete- and masonry-bearing surfaces of bond-reducing materials, and roughen surfaces prior to setting plates. Clean bottom surface of plates.

1. Set plates for structural members on wedges, shims, or setting nuts as required.

2. Weld plate washers to top of baseplate.

3. Snug-tighten anchor rods after supported members have been positioned and plumbed. Do not remove wedges or shims but, if protruding, cut off flush with edge of plate before packing with grout.

4. Promptly pack grout solidly between bearing surfaces and plates so no voids remain. Neatly finish exposed surfaces; protect grout and allow to cure. Comply with manufacturer's written installation instructions for shrinkage-resistant grouts.

C. Maintain erection tolerances of structural steel within AISC 303, "Code of Standard Practice for Steel Buildings and Bridges."

D. Align and adjust various members that form part of complete frame or structure before permanently fastening. Before assembly, clean bearing surfaces and other surfaces that are in permanent contact with members. Perform necessary adjustments to compensate for discrepancies in elevations and alignment.

1. Level and plumb individual members of structure.

2. Make allowances for difference between temperature at time of erection and mean temperature when structure is completed and in service.

E. Splice members only where indicated.

F. Do not use thermal cutting during erection.

G. Do not enlarge unfair holes in members by burning or using drift pins. Ream holes that must be enlarged to admit bolts.

3.4 FIELD CONNECTIONS

A. High-Strength Bolts: Install high-strength bolts according to RCSC's "Specification for Structural Joints Using ASTM A 325 or A 490 Bolts" for type of bolt and type of joint specified.

1. Joint Type: Snug tightened.

B. Weld Connections: Comply with AWS D1.1/D1.1M and AWS D1.8/D1.8M for tolerances, appearances, welding procedure specifications, weld quality, and methods used in correcting welding work.

1. Comply with AISC 303 and AISC 360 for bearing, alignment, adequacy of temporary connections, and removal of paint on surfaces adjacent to field welds.

2. Remove backing bars or runoff tabs, back gouge, and grind steel smooth.

3. Assemble and weld built-up sections by methods that maintain true alignment of axes without exceeding tolerances in AISC 303, "Code of Standard Practice for Steel Buildings and Bridges," for mill material.

3.5 FIELD QUALITY CONTROL

A. Special Inspections: The Contrator shall engage and pay for a qualified special inspector to perform the following special inspections:

1. Verify structural-steel materials and inspect steel frame joint details.

2. Verify weld materials and inspect welds.

3. Verify connection materials and inspect high-strength bolted connections.

B. Bolted Connections: Inspect bolted connections according to RCSC's "Specification for Structural Joints Using ASTM A 325 or A 490 Bolts."

C. Welded Connections: Visually inspect field welds according to AWS D1.1/D1.1M.

1. In addition to visual inspection, test and inspect field welds according to AWS D1.1/D1.1M and the following inspection procedures, at testing agency's option:

a. Liquid Penetrant Inspection: ASTM E 165.

b. Magnetic Particle Inspection: ASTM E 709; performed on root pass and on finished weld. Cracks or zones of incomplete fusion or penetration are not accepted.

c. Ultrasonic Inspection: ASTM E 164.

d. Radiographic Inspection: ASTM E 94.

3.6 REPAIRS AND PROTECTION

A. Galvanized Surfaces: Clean areas where galvanizing is damaged or missing and repair galvanizing to comply with ASTM A 780/A 780M.

B. Touchup Painting: Immediately after erection, clean exposed areas where primer is damaged or missing and paint with the same material as used for shop painting to comply with SSPC-PA 1 for touching up shop-painted surfaces.

1. Clean and prepare surfaces by SSPC-SP 2 hand-tool cleaning or SSPC-SP 3 power-tool cleaning.

END OF SECTION

DIVISION 6 – WOOD AND PLASTIC

SECTION 06070

WOOD TREATMENT

PART 1 - GENERAL

1.1 SECTION INCLUDES

A. Plant preservative and insecticide treatment of lumber and other wood products specified in other Sections of this Specification by pressure and dip methods.

B. Field treatment of field cut or drilled lumber.

1.2 RELATED SECTIONS

A. Section 06105 - Miscellaneous Carpentry.

1.3 REFERENCES

A. American Wood-Preservers' Association

1. AWPA C2-00: Lumber, Timber, Bridge Ties and Mine Ties-Preservative Treatment by Pressure Processes.

2. AWPA C9-00: Plywood-Preservative Treatment by Pressure Processes.

3. AWPA C31-00: Lumber Used out of Contact with the Ground and Continuously Protected from Liquid Water-Treatment by Pressure Processes.

4. AWPA M4-01: Care of Preservative-Treated Wood Products.

5. AWPA C20-99: Structural Lumber- Fire Retardant Treatment by Pressure Process.

6. AWPA N1-01: All millwork, Preservative Treatment by Non-Pressure Process.

7. AWPA N2-00: Composite Wood Products, Preservative Treatment by Non-Pressure Process.

1.4 SUBMITTALS

A. Product Data: Provide data on all treatment products, including field application instructions if applicable.

1. Provide manufacturer's Material Safety Data Sheets on all products, and hazardous materials.

2. Provide ICBO approvals for treatment solutions used.

B. Preserver Certifications:

1. Provide a Certificate of Treatment showing compliance with these specifications for the following:

a. Kiln drying.

b. Method of treatment performed, including dip treatment.

C Contractor's Certification: Provide a certification letter stating that all wood used on this job including cuts and penetration were treated and coated with preservatives in compliance with requirements of this contract.

D. Guarantee: Guarantee form for written guarantee.

1.5 REGULATORY REQUIREMENTS

A. Comply with State OSHL (Occupancy Safety and Health Law) and pollution controls regulations of the State Department of Health and EPA.

1.6 QUALITY ASSURANCE

A. Treatment methods shall be approved by ICBO. Preservatives shall be EPA registered.

B. Do not use preservatives containing arsenic or other EPA banned chemicals.

C. Do not use Perma-Clear 65 or other zinc napthanate and permethrin products.

1.7 DELIVERY STORAGE AND HANDLING

A. Protect AWPA C31 inorganic boron treated wood from contact with the ground, rain or other sources of liquid water until permanent installation of covering construction.

PART 2 - PRODUCTS

2.1 GENERAL

A. Mill lumber to finish size and shape prior to treating, and treat before assembly. Plywood may be treated in regular panel sizes.

B. Mark each treated item with the treatment quality mark of an inspection agency approved by the American Lumber Standards Committee Board of Review.

1. For exposed lumber indicated to receive a stained or natural finish, mark end or back of each piece, or omit marking and provide certificates of treatment compliance issued by inspection agency.

2.2 PRESSURE TREATMENT WITH WATER-BORNE PRESERVATIVES

A. Treating solutions:

1. Copper azole, Type A (CBA-A).

2. Inorganic boron (SBX).

B. Treatment Methods:

1. General:

a. All water-borne treatment methods require incising of lumber of nominal 2 inch thickness (1-1/2 inches actual dimension).

b. Choice of treatment method and conditions of use of each treating solution shall conform to the treatment schedule contained in Part 3.

2. CBA-A: Treatment methods, depth of penetration and treating solution retention shall conform to AWPA C2 for lumber and C9 for plywood.

3. SBX: Treatment method shall conform to AWPA C31. Treating solution retention shall be a minimum of 0.28 pounds per cubic foot (equivalent to 0.42 DOT).

C. Drying:

1. Before Treatment:

a. CBA-A Treatment: Wood shall be air dried or kiln-dried before treatment to an average moisture content of 28 percent or less per AWPA standards.

b. SBX Treatment: Wood having a moisture content higher than 28% is acceptable when treating with SBX.

2. After Treatment:

a. All 1 inch and 2 inch lumber and all plywood shall be dried to a moisture content of 19 percent or less after treatment.

2.3 PRESSURE TREATMENT WITH OIL-BORNE PRESERVATIVES

A. Treating Solution:

1. 0.50 percent by weight chlorpyrifos, 0.75 percent by weight 3-iodo-2-propynyl butyl carbamate (IPBC). The solvent used in formulating the preservative solution shall meet the requirements of AWPA hydrocarbon solvent Type C, Standard P9, Paragraph 3.1.

2. For interior application use low odor mineral spirits as solvent.

B. Treatment Methods:

1. Treated wood shall attain the following net retention requirements: 0.0175 pounds of Chlorpyrifos per cubic foot of wood, 0.035 pound of 3-Iodo-2 propynyl butyl carbamate per cubic foot of wood.

C. Drying:

1. Before Treatment: All wood treated with oil-borne preservatives shall be kiln-dried to an average moisture content of 12% to 15% per AWPA standards.

2. After Treatment: Wood shall be thoroughly dried and virtually odor-free prior to installation.

2.4 PRESERVATION BY DIP TREATMENT

A. Treating Solution:

1. Any of the Oil-Borne Preservatives listed above.

2. A solution of 1 quart chlopyrifos in 55 gallons of a 0.50 percent IPBC solution.

B. Treatment Methods:

1. Immersion treat for a minimum period of 15 minutes. Hollow-core flush wood doors shall be immersion treated for a period of 5 minutes.

2. Do not incise lumber scheduled to be left unpainted or receive a clear finish.

C. Drying:

1. After Treatment: Wood shall be thoroughly dried and virtually odor-free prior to installation.

2.5 FIELD TREATMENT

A. Treatment Method:

1. Treat in accordance with AWPA Standard M4-98 using two heavy brush coats of a treating solution.

2. Doors shall be treated after manufacture but, where applicable, before application of plastic laminate.

PART 3 - EXECUTION

3.1 SCHEDULE OF TREATMENTS

A. Species:

1. Treat all wood species except all-heart redwood.

2. All water-borne and oil-borne treatment solutions are applicable to douglas-fir and hem-fir species except for CBA-A treatment which is acceptable for hem-fir species only.

B. Application:

1. Pressure Treatment:

a. General: Unless otherwise stipulated, all lumber and plywood shall be pressure treated.

b. Hardwood flooring and exposed lumber 1-1/2" (net thickness) and over that will be unpainted or receive a clear finish shall be pressure treated with oil-borne preservative. Do not incise lumber.

2. SBX treated wood shall not be used in areas exposed to direct precipitation (e.g. exposed decking, trellises, fencing, etc.) unless painted or covered with a finish material.

3. Dip Treatment: All finish lumber under 1-1/2 inch net thickness (except hardwood flooring); doors (solid wood and solid-core flush wood doors); finish plywood; and mill work items, such as for cabinet work, shelving and similar wood work that will be exposed to view in the finished work.

4. Field Cuts: Treat end cuts, notches and penetrations into treated lumber or plywood. Exception: Cuts and penetrations made in SBX treated wood 2 inches or less in nominal thickness need not be field treated.

END OF SECTION

SECTION 06100

ROUGH CARPENTRY

PART 1 - GENERAL

1.1 GENERAL REQUIREMENTS

A. Description: This work shall consist of furnishing and installing all rough carpentry in accordance with the requirements of the contract.

1.2 SUMMARY

A. Section Includes:

1. Framing with dimension lumber.

2. Wood blocking, cants, and nailers.

3. Wood furring and grounds.

4. Wood sleepers.

B. Related Requirements:

1. Section 06150 “Wood Roof Decking”.

2. Section 06160 "Sheathing”.

1.3 DEFINITIONS

A. Boards or Strips: Lumber of less than 2 inches nominal (38 mm actual) size in least dimension.

B. Dimension Lumber: Lumber of 2 inches nominal (38 mm actual) size or greater but less than 6 inches nominal size in least dimension.

C. Timber: Lumber of 6 inches nominal size or greater in least dimension.

D. Exposed Framing: Framing not concealed by other construction.

1.4 SUBMITTALS

A. Submit in accordance with Section 01300 – Submittals.

B. Product Data: For each type of process and factory-fabricated product. Indicate component materials and dimensions and include construction and application details.

1. Include data for wood-preservative treatment from chemical treatment manufacturer and certification by treating plant that treated materials comply with requirements. Indicate type of preservative used and net amount of preservative retained.

2. For products receiving a waterborne treatment, include statement that moisture content of treated materials was reduced to levels specified before shipment to Project site.

C. Material Certificates: For dimension lumber specified to comply with minimum allowable unit stresses. Indicate species and grade selected for each use and design values approved by the ALSC Board of Review.

D. Evaluation Reports: For the following, from ICC-ES:

1. Wood-preservative-treated wood.

2. Power-driven fasteners.

3. Post-installed anchors.

4. Metal framing anchors.

1.5 DELIVERY, STORAGE, AND HANDLING

A. Stack wood products flat with spacers beneath and between each bundle to provide air circulation. Protect wood products from weather by covering with waterproof sheeting, securely anchored. Provide for air circulation around stacks and under coverings.

PART 2 - PRODUCTS

2.1 WOOD PRODUCTS, GENERAL

A. Lumber: DOC PS 20 and applicable rules of grading agencies indicated. If no grading agency is indicated, comply with the applicable rules of any rules-writing agency certified by the ALSC Board of Review. Grade lumber by an agency certified by the ALSC Board of Review to inspect and grade lumber under the rules indicated.

1. Factory mark each piece of lumber with grade stamp of grading agency.

2. Dress lumber, S4S, unless otherwise indicated.

B. Maximum Moisture Content of Lumber: 19 percent unless otherwise indicated.

2.2 WOOD-PRESERVATIVE-TREATED LUMBER

A. Preservative Treatment by Pressure Process: AWPA U1; Use Category UC2 for interior construction not in contact with ground, Use Category UC3b for exterior construction not in contact with ground, and Use Category UC4a for items in contact with ground.

1. Preservative Chemicals: Acceptable to authorities having jurisdiction and containing no arsenic or chromium.

B. Kiln-dry lumber after treatment to a maximum moisture content of 19 percent. Do not use material that is warped or that does not comply with requirements for untreated material.

C. Mark lumber with treatment quality mark of an inspection agency approved by the ALSC Board of Review.

D. Application: Treat all rough carpentry unless otherwise indicated.

2.3 DIMENSION LUMBER FRAMING

A. Joists, Rafters, Blocking and Other Framing: No. 1 grade.

1. Species:

a. Douglas fir-larch; WCLIB or WWPA.

2.4 TIMBER FRAMING

A. Comply with the following requirements, according to grading rules of grading agency indicated:

1. Species and Grade: Douglas fir-larch, Douglas fir-larch; No. 1 grade; WCLIB, or WWPA.

2.5 FASTENERS

A. General: Fasteners shall be of size and type indicated and shall comply with requirements specified in this article for material and manufacture.

1. Where rough carpentry is exposed to weather, in ground contact, pressure-preservative treated, or in area of high relative humidity, provide fasteners with hot-dip zinc coating complying with ASTM A 153/A 153M.

B. Nails, Brads, and Staples: ASTM F 1667.

C. Power-Driven Fasteners: Fastener systems with an evaluation report acceptable to authorities having jurisdiction, based on ICC-ES AC70.

D. Post-Installed Anchors: Fastener systems with an evaluation report acceptable to authorities having jurisdiction, based on ICC-ES AC308 as appropriate for the substrate.

1. Material: Carbon-steel components, zinc plated to comply with ASTM B 633, Class Fe/Zn 5.

2.6 METAL FRAMING ANCHORS

A. Galvanized-Steel Sheet: Hot-dip, zinc-coated steel sheet complying with ASTM A 653/A 653M, G60 coating designation.

1. Use for interior locations unless otherwise indicated.

B. Stainless-Steel Sheet: ASTM A 666, Type 304.

1. Use for exterior locations and where indicated.

C. Post Bases: Adjustable-socket type for bolting in place with standoff plate to raise post 1 inch (25 mm) above base and with 2-inch- (50-mm-) minimum side cover, socket 0.062 inch (1.6 mm) thick, and standoff and adjustment plates 0.108 inch (2.8 mm) thick.

PART 3 - EXECUTION

3.1 INSTALLATION, GENERAL

A. Framing Standard: Comply with AF&PA's WCD 1, "Details for Conventional Wood Frame Construction," unless otherwise indicated.

B. Set rough carpentry to required levels and lines, with members plumb, true to line, cut, and fitted. Fit rough carpentry accurately to other construction. Locate furring, nailers, blocking, grounds, and similar supports to comply with requirements for attaching other construction.

C. Install metal framing anchors to comply with manufacturer's written instructions. Install fasteners through each fastener hole.

D. Do not splice structural members between supports unless otherwise indicated.

E. Provide blocking and framing as indicated and as required to support facing materials, fixtures, specialty items, and trim.

1. Provide metal clips for fastening gypsum board at corners and intersections where framing or blocking does not provide a surface for fastening edges of panels. Space clips not more than 16 inches (406 mm) o.c.

F. Sort and select lumber so that natural characteristics do not interfere with installation or with fastening other materials to lumber. Do not use materials with defects that interfere

with function of member or pieces that are too small to use with minimum number of joints or optimum joint arrangement.

G. Comply with AWPA M4 for applying field treatment to cut surfaces of preservative-treated lumber.

1. Use inorganic boron for items that are continuously protected from liquid water.

2. Use copper naphthenate for items not continuously protected from liquid water.

H. Securely attach rough carpentry work to substrate by anchoring and fastening as indicated, complying with the following:

1. Table 2304.9.1, "Fastening Schedule," in ICC's International Building Code (IBC).

2. Table R602.3(1), "Fastener Schedule for Structural Members," and Table R602.3(2), "Alternate Attachments," in ICC's International Residential Code for One- and Two-Family Dwellings.

3. ICC-ES evaluation report for fastener.

I. Use steel common nails unless otherwise indicated. Select fasteners of size that will not fully penetrate members where opposite side will be exposed to view or will receive finish materials. Make tight connections between members. Install fasteners without splitting wood. Drive nails snug but do not countersink nail heads unless otherwise indicated.

J. For exposed work, arrange fasteners in straight rows parallel with edges of members, with fasteners evenly spaced, and with adjacent rows staggered.

1. Comply with indicated fastener patterns where applicable. Before fastening, mark fastener locations, using a template made of sheet metal, plastic, or cardboard.

2. Use finishing nails unless otherwise indicated. Countersink nail heads and fill holes with wood filler.

3. Use common nails unless otherwise indicated. Drive nails snug but do not countersink nail heads.

3.2 WOOD BLOCKING, AND NAILER INSTALLATION

A. Install where indicated and where required for screeding or attaching other work. Form to shapes indicated and cut as required for true line and level of attached work. Coordinate locations with other work involved.

B. Attach items to substrates to support applied loading. Recess bolts and nuts flush with surfaces unless otherwise indicated.

C. Provide permanent grounds of dressed, pressure-preservative-treated, key-beveled lumber not less than 1-1/2 inches (38 mm) wide and of thickness required to bring face of ground to exact thickness of finish material. Remove temporary grounds when no longer required.

3.3 WOOD FURRING INSTALLATION

A. Install level and plumb with closure strips at edges and openings. Shim with wood as required for tolerance of finish work.

B. Furring to Receive Gypsum Board: Install 1-by-2-inch nominal- (19-by-38-mm actual-) size furring vertically at 16 inches (406 mm) o.c.

3.4 RAFTER FRAMING INSTALLATION

A. Rafters: Notch to fit exterior wall plates and use metal framing anchors.
Double rafters to form headers and trimmers at openings in roof framing, if any, and support with metal hangers. Where rafters abut at ridge, place directly opposite each other and nail to ridge member or use metal ridge hangers.

1. At valleys, provide double-valley rafters of size indicated or, if not indicated, of same thickness as regular rafters and 2 inches (50 mm) deeper. Bevel ends of jack rafters for full bearing against valley rafters.

2. At hips, provide hip rafter of size indicated or, if not indicated, of same thickness as regular rafters and 2 inches (50 mm) deeper. Bevel ends of jack rafters for full bearing against hip rafter.

B. Provide special framing as indicated for eaves, overhangs, and similar conditions if any.

3.5 TIMBER FRAMING INSTALLATION

A. Install wood posts using metal anchors indicated.

B. Treat ends of timber posts exposed to weather by dipping in water-repellent preservative for 15 minutes.

3.6 PROTECTION

A. Protect wood that has been treated with inorganic boron (SBX) from weather. If, despite protection, inorganic boron-treated wood becomes wet, apply EPA-registered borate treatment. Apply borate solution by spraying to comply with EPA-registered label.

B. Protect rough carpentry from weather. If, despite protection, rough carpentry becomes wet enough that moisture content exceeds that specified, apply EPA-registered borate treatment. Apply borate solution by spraying to comply with EPA-registered label.

END OF SECTION

SECTION 06105

MISCELLANEOUS CARPENTRY

PART 1 - GENERAL

1.1 SUMMARY

A. This Section includes the following:

1. Wood blockings and furring strips.

2. Wood fascias, edge nailers and trims.

3. Wood decking.

B. Related Sections include:

1. Section 06070 - Wood Treatment.

1.2 DEFINITIONS

A. Lumber grading agencies, and the abbreviations used to reference them, include the following:

1. WCLIB - West Coast Lumber Inspection Bureau.

2. WWPA - Western Wood Products Association.

1.3 SUBMITTALS

A. Product Data: For each type of process and factory-fabricated product. Indicate component materials and dimensions and include construction and application details.

1. Include data for wood-preservative treatment from chemical treatment manufacturer and certification by treating plant that treated materials comply with requirements. Indicate type of preservative used, net amount of preservative retained, and chemical treatment manufacturer's written instructions for handling, storing, installing, and finishing treated material.

2. For products receiving a waterborne treatment, include statement that moisture content of treated materials was reduced to levels specified before shipment to Project site.

3. Include copies of warranties from chemical treatment manufacturers for each type of treatment.

B. Research/Evaluation Reports: For the following, showing compliance with building code in effect for Project.

1. Preservative-treated wood.

1.4 DELIVERY, STORAGE, AND HANDLING

A. Stack lumber, plywood, and other panels; place spacers between each bundle to provide air circulation. Provide for air circulation around stacks and under coverings.

PART 2 - PRODUCTS

2.1 WOOD PRODUCTS, GENERAL

A. Lumber: DOC PS 20 and applicable rules of lumber grading agencies certified by the American Lumber Standards Committee Board of Review.

1. Factory mark each piece of lumber with grade stamp of grading agency.

2. Where nominal sizes are indicated, provide actual sizes required by DOC PS 20 for moisture content specified. Where actual sizes are indicated, they are minimum dressed sizes for dry lumber.

3. Provide dressed lumber, S4S, unless otherwise indicated.

4. Provide dry lumber with 19 percent maximum moisture content at time of dressing for 2-inch nominal (38-mm actual) thickness or less, unless otherwise indicated.

2.2 WOOD-PRESERVATIVE-TREATED MATERIALS

A. Preservative Treatment: Treat lumber in accordance with Division 6 Section 06070 "Wood Treatment".

2.3 MISCELLANEOUS LUMBER

A. General: Provide lumber for support or attachment of other construction, including the following:

1. Blocking.

2. Nailers.

3. Decking.

4. Fascia boards.

5. Trims.

6. Wood sheathing.

B. For items of dimension lumber size, provide Douglas fir Structural No. 2 grade or better lumber with 19 percent maximum moisture content.

2.4 FASTENERS

A. General: Provide fasteners of size and type indicated that comply with requirements specified in this Article for material and manufacture.

1. Where carpentry is exposed to weather, in ground contact, or in area of high relative humidity, provide fasteners with hot-dip zinc coating complying with ASTM A 153/A 153M.

B. Nails, Wire, Brads, and Staples: FS FF-N-105.

C. Power-Driven Fasteners: CABO NER-272.

D. Wood Screws: ASME B18.6.1.

E. Screws for Fastening to Cold-Formed Metal Framing: ASTM C 954, except with wafer heads and reamer wings, length as recommended by screw manufacturer for material being fastened.

F. Lag Bolts: ASME B18.2.1. (ASME B18.2.3.8M).

G. Bolts: Steel bolts complying with ASTM A 307, Grade A (ASTM F 568M, Property Class 4.6); with ASTM A 563 (ASTM A 563M) hex nuts and, where indicated, flat washers.

H. Expansion Anchors: Anchor bolt and sleeve assembly of material indicated below with capability to sustain, without failure, a load equal to 6 times the load imposed when installed in unit masonry assemblies and equal to 4 times the load imposed when installed in concrete as determined by testing per ASTM E 488 conducted by a qualified independent testing and inspecting agency.

1. Material: Carbon-steel components, zinc plated to comply with ASTM B 633, Class Fe/Zn 5.

PART 3 – EXECUTION

3.1 INSTALLATION, GENERAL

A. Discard units of material with defects that impair quality of carpentry and that are too small to use with minimum number of joints or optimum joint arrangement.

B. Set carpentry to required levels and lines, with members plumb, true to line, cut, and fitted. Fit carpentry to other construction; scribe and cope as needed for accurate fit. Locate nailers, blocking, and similar supports to comply with requirements for attaching other construction

C. Apply field treatment complying with AWPA M4 to cut surfaces of preservative-treated lumber.

D. Securely attach carpentry work as indicated and according to applicable codes and recognized standards.

E. Use fasteners of appropriate type and length. Predrill members when necessary to avoid splitting wood.

3.2 WOOD BLOCKING, NAILER, DECKING AND FASCIA INSTALLATION

A. Install where indicated and where required for attaching other work. Form to shapes indicated and cut as required for true line and level of attached work. Coordinate locations with other work involved.

B. Attach items to substrates to support applied loading. Recess bolts and nuts flush with surfaces, unless otherwise indicated.

END OF SECTION

SECTION 06150

WOOD ROOF DECKING

PART 1 - GENERAL

1.1 RELATED DOCUMENTS

A. Drawings and general provisions of the Contract, including General and Supplementary Conditions and Division 01 Specification Sections, apply to this Section.

1.2 SUMMARY

A. Section includes solid-sawn wood roof decking

B. Related Requirements:

1. Section 06100 "Rough Carpentry" for dimension lumber items associated with wood roof decking.

1.3 SUBMITTALS

A. Submit in accordance with Section 01300 – Submittals.

B. Product Data: For each type of product.

1. For preservative-treated wood products, include chemical treatment manufacturer's written instructions for handling, storing, installing, and finishing treated material.

1.4 DELIVERY, STORAGE, AND HANDLING

A. Schedule delivery of wood roof decking to avoid extended on-site storage and to avoid delaying the Work.

B. Store materials under cover and protected from weather and contact with damp or wet surfaces. Provide for air circulation within and around stacks and under temporary coverings. Stack wood roof decking with surfaces that are to be exposed in the final Work protected from exposure to sunlight.

PART 2 - PRODUCTS

2.1 WOOD ROOF DECKING, GENERAL

A. General: Comply with DOC PS 20 and with applicable grading rules of inspection agencies certified by ALSC's Board of Review.

2.2 SOLID-SAWN WOOD ROOF DECKING

A. Standard for Solid-Sawn Wood Roof Decking: Comply with AITC 112.

B. Roof Decking Species: Douglas fir-larch.

C. Roof Decking Nominal Size: Minimum dimensions to match existing decking to be replaced.

D. Roof Decking Grade: Selected Decking or Select Dex.

E. Grade Stamps: Factory mark each item with grade stamp of grading agency. Apply grade stamp to surfaces that are not exposed to view.

F. Moisture Content: Provide wood roof decking with 19 percent maximum moisture content at time of dressing.

G. Face Surface: Smooth to match existing.

H. Edge Pattern: Channel grooved to match existing.

2.3 PRESERVATIVE TREATMENT

A. Pressure treat wood roof decking according to AWPA U1; Use Category UC2.

B. Preservative Chemicals: Acceptable to authorities having jurisdiction and containing no arsenic or chromium.

C. Use process that does not include water repellents or other substances that might interfere with application of indicated finishes.

D. After treatment, redry materials to 19 percent maximum moisture content.

E. After dressing and fabricating roof decking, apply acceptable treatment according to AWPA M4 to surfaces cut to a depth of more than 1/16 inch (1.5 mm).

2.4 ACCESSORY MATERIALS

A. Fasteners for Solid-Sawn Roof Decking: Provide fastener size and type complying with AITC 112 for thickness of deck used.

B. Nails: Common; complying with ASTM F 1667, Type I, Style 10.

C. Fastener Material: Hot-dip galvanized steel.

2.5 FABRICATION

A. Shop Fabrication: Where preservative-treated roof decking is indicated, complete cutting, trimming, surfacing, and sanding before treating.

B. Predrill roof decking for lateral spiking to adjacent units to comply with AITC 112.

C. Seal Coat: After fabricating and surfacing roof decking, apply a saturation coat of penetrating sealer in fabrication shop.

PART 3 - EXECUTION

3.1 EXAMINATION

A. Examine walls and support framing in areas to receive wood roof decking for compliance with installation tolerances and other conditions affecting performance of wood roof decking.

B. Proceed with installation only after unsatisfactory conditions have been corrected.

3.2 INSTALLATION

A. Install solid-sawn wood roof decking to comply with AITC 112.

1. Locate end joints for combination simple and two-span continuous lay-up.

B. Where preservative-treated roof decking must be cut during erection, apply a field-treatment preservative to comply with AWPA M4.

1. For solid-sawn roof decking, use inorganic boron (SBX).

C. Apply joint sealant to seal roof decking at exterior walls at the following locations:

1. Between roof decking and supports located at exterior walls.

2. Between roof decking and exterior walls that butt against underside of roof decking.

3. Between tongues and grooves of roof decking over exterior walls and supports at exterior walls.

3.3 ADJUSTING

A. Repair damaged surfaces and finishes after completing erection. Replace damaged roof decking if repairs are not approved by Engineer.

3.4 PROTECTION

A. Provide water-resistive barrier over roof decking as the Work progresses to protect roof decking until roofing is applied.

B. If, despite protection, roof decking becomes wet, apply EPA-registered borate treatment. Apply borate solution by spraying to comply with EPA-registered label.

END OF SECTION

SECTION 06160

SHEATHING

PART 1 – GENERAL

1.1 GENERAL REQUIREMENTS

A. Description: This work shall consist of furnishing and installing all rough carpentry in accordance with the requirements of the contract.

1.2 SUMMARY

A. Section Includes:

1. Roof sheathing.

B. Related Requirements:

1. Section 06100 "Rough Carpentry".

2. Section 06150 "Wood Roof Decking".

1.3 SUBMITTALS

A. Submit in accordance with Section 01300 – Submittals.

B. Product Data: For each type of process and factory-fabricated product. Indicate component materials and dimensions and include construction and application details.

1. Include data for wood-preservative treatment from chemical treatment manufacturer and certification by treating plant that treated plywood complies with requirements. Indicate type of preservative used and net amount of preservative retained.

C. Evaluation Reports: For the following, from ICC-ES:

1. Wood-preservative-treated plywood.

1.4 DELIVERY, STORAGE, AND HANDLING

A. Stack panels flat with spacers beneath and between each bundle to provide air circulation. Protect sheathing from weather by covering with waterproof sheeting, securely anchored. Provide for air circulation around stacks and under coverings.

PART 2 – PRODUCTS

2.1 WOOD PANEL PRODUCTS

A. Thickness: As needed to comply with requirements specified, but not less than thickness indicated.

B. Factory mark panels to indicate compliance with applicable standard.

2.2 PRESERVATIVE-TREATED PLYWOOD

A. Preservative Treatment by Pressure Process: AWPA U1; Use Category UC3b for exterior construction not in contact with ground.

1. Preservative Chemicals: Acceptable to authorities having jurisdiction and containing no arsenic or chromium.

B. Mark plywood with appropriate classification marking of an inspection agency acceptable to authorities having jurisdiction.

C. Application: Treat all plywood unless otherwise indicated.

2.3 ROOF SHEATHING

A. Plywood Sheathing: DOC PS 1, Exposure 1, Structural I sheathing.

1. Span Rating: Not less than 48/24.

2. Nominal Thickness: Not less than 1/2 inch (13 mm).

2.4 FASTENERS

A. General: Provide fasteners of size and type indicated that comply with requirements specified in this article for material and manufacture.

1. For roof sheathing, provide fasteners with hot-dip zinc coating complying with ASTM A 153/A 153M.

B. Nails, Brads, and Staples: ASTM F 1667.

PART 3 – EXECUTION

3.1 INSTALLATION, GENERAL

A. Do not use materials with defects that impair quality of sheathing or pieces that are too small to use with minimum number of joints or optimum joint arrangement. Arrange joints so that pieces do not span between fewer than three support members.

B. Cut panels at penetrations, edges, and other obstructions of work; fit tightly against abutting construction unless otherwise indicated.

C. Securely attach to substrate by fastening as indicated, complying with the following:

1. Table 2304.9.1, "Fastening Schedule," in the ICC's International Building Code.

D. Use common wire nails unless otherwise indicated. Select fasteners of size that will not fully penetrate members where opposite side will be exposed to view or will receive finish materials. Make tight connections. Install fasteners without splitting wood.

E. Coordinate roof sheathing installation with flashing and joint-sealant installation so these materials are installed in sequence and manner that prevent exterior moisture from passing through completed assembly.

F. Do not bridge building expansion joints; cut and space edges of panels to match spacing of structural support elements.

G. Coordinate sheathing installation with installation of materials installed over sheathing so sheathing is not exposed to precipitation or left exposed at end of the workday when rain is forecast.

3.2 WOOD STRUCTURAL PANEL INSTALLATION

A. General: Comply with applicable recommendations in APA Form No. E30, "Engineered Wood Construction Guide," for types of structural-use panels and applications indicated.

B. Fastening Methods: Fasten panels as indicated below:

3. Roof Sheathing:

a. Nail to wood framing.

b. Space panels 1/8 inch (3 mm) apart at edges and ends.

END OF SECTION

DIVISION 7 - THERMAL AND MOISTURE PROTECTION

SECTION 07310

ASPHALT SHINGLES

PART 1 - GENERAL

1.1 SECTION INCLUDES

A. Granule surfaced asphalt shingle roofing.

B. Moisture shedding underlayment, eaves, valley and ridge protection.

C. Associated metal flashing.

1.2 RELATED SECTIONS

A. Section 06105 – Miscellaneous Carpentry.

B. Section 07530 - Single Ply TPO Membrane Roofing.

C. Section 07620 – Sheet Metal Flashing and Trim.

D. Section 07920 – Sealants and Caulking.

1.3 REFERENCES

A. ASTM A 653/A 653M – Standard Specification for Steel Sheets, Zinc-Coated (Galvanized) or Zinc-Iron-Alloy-Coated (Galvannealed) by the Hot-Dip Process.

B. ASTM B 209 – Standard Specification for Aluminum and Aluminum-Alloy Sheet and Plate.

C. ASTM B 370 – Standard Specification for Copper Sheet and Strip for Building Construction.

D. ASTM D 1970 – Standard Specification for Self-Adhering Polymer Modified Bituminous Sheet Materials used as Steep Roofing Underlayment for Ice Dam Protection.

E. ASTM D 3018 – Standard Specification for Class A Shingles Surfaced with Mineral Granules.

F. ASTM D 3161 – Standard Test Method for Wind Resistance of Asphalt Shingles (Fan-Induced Method).

G. ASTM D 4586 – Standard Specification for Asphalt Roof Cement, Asbestos-Free.

H. ASTM D7158 – Standard Test Method for Wind Resistance of Asphalt Shingles (Uplift Force/Uplift Resistance Method).

I. ASTM E 108 – Standard Test Methods for Fire Test of Roof Coverings.

J. ASTM G 21 – Determining Resistance of Synthetic Polymers to Fungi.

1.4 SUBMITTALS

A. Submit under provisions of Section 01300 – Submittals.

B. Product Data: Provide manufacturer's printed product information indicating material characteristics, performance criteria and product limitations.

C. Manufacturer's Installation Instructions: Provide published instructions that indicate preparation required and installation procedures.

D. Certificate of Compliance: Provide Certificate of Compliance from an independent laboratory indicating that the asphalt fiberglass shingles made in normal production meet or exceed the requirements of the following:

1. ASTM E 108/UL 790 Class A Fire Resistance.

2. ASTM D 3161/D 7158/UL 997 Wind Resistance.

3. ASTM D 3462.

E. Shop Drawings: Indicate specially configured metal flashing, jointing methods and locations, fastening methods and locations and installation details as required by project conditions indicated.

1.5 QUALITY ASSURANCE

A. Installer Minimum Qualifications: Installer shall be licensed or otherwise authorized by all federal, state and local authorities to install all products specified in this section. Installer shall perform work in accordance with NRCA Roofing and Waterproofing Manual. Work shall be acceptable to the asphalt shingle manufacturer.

B. Mock-Up: Provide a mock-up for evaluation of surface preparation techniques and application workmanship.

1. Finish areas designated by Engineer.

2. Do not proceed with remaining work until workmanship, color and pattern are approved by the Engineer.

3. Rework Mock-Up area as required to produce acceptable work.

C. Pre-Installation Meeting – Conduct a pre-installation meeting at the site prior to commencing work of this section: Require attendance of entities directly concerned with roof installation. Agenda will include:

1. Installation methods and manufacturer's requirements and recommendations.

2. Safety procedures.

3. Coordination with installation of other work.

4. Availability of roofing materials.

5. Provide 50 square feet of extra shingles of each color specified.

6. Preparation and approval of substrate and penetrations through roof.

7. Other items related to successful execution of work.

8. Product Compliance – Verify that products conform with all requirements specified by local Authority Having Jurisdiction (AHJ).

D. Maintain one copy of manufacturer's application instructions on the project site.

1.6 DELIVERY, STORAGE, AND HANDLING

A. Store Products in manufacturer's unopened packaging until ready for installation.

B. Store and dispose of solvent-based materials and materials used with solvent based materials in accordance with requirements of Authorities Having Jurisdiction.

C. Deliver shingles to site in manufacturer's unopened labeled bundles. Promptly verify quantities and conditions. Immediately remove damaged products from site.

1.7 PROJECT ENVIRONMENTAL CONDITIONS

A. Anticipate and observe environmental conditions (temperature, humidity and moisture) within limits recommended by manufacturer for optimum results. Do not install products under environment conditions outside manufacturer's limits.

B. Take special care when applying WinterGuard Waterproofing Shingle Underlayment and shingles when ambient or wind chill temperature is below 45 degrees F (7 degrees C). Tack WinterGuard in place if it does not adhere immediately to the deck.

1.8 WARRANTY

A. Manufacturer's Warranty: Furnish shingle manufacturer's warranty for the product: **CertainTeed Patriot AR or pre-approved equal**: 30-year limited warranty.

B. Warranty Supplement: Provide manufacturer's supplemental warranty.

C. CertainTeed's SureStart™ after completion of application of shingles:

1. First Eight Years **Patriot AR** Shingles or pre-approved equal.

D. Warranty Transferability Clause: Make available to the State's shingle manufacturer's standard option for transferring warranty to a new owner.

E. Refer to manufacturer's warranty for adjustments for commercial applications.

PART 2 - PRODUCTS

2.1 MANUFACTURERS

Acceptable Manufacturer: Provide products manufactured by the CertainTeed Corporation. Contact Sales Support Group P.O. Box 860 Valley Forge, PA 19482 Toll Free 800-233-8990 or pre-approved equal

A. Requests for substitutions will be considered in accordance with the applicable provisions contained elsewhere within the contract specifications.

2.2 ASPHALT FIBERGLASS SHINGLES

A. **CertainTeed Patriot AR Shingles or pre-approved equal**: Conforming to ASTM D 3018 Type I –Self-Sealing; UL Certification of ASTM D 3462; ASTM D7158 Class "H"; ASTM D 3161 Class "F" Wind Resistance; and UL 790/ ASTM E108 Class "A" Fire Resistance; ceramic colored/UV resistant mineral surface granules across entire face of shingle; algae-resistant granules; no cut outs.

1. Weight: 215 pounds per square (100 square feet applied)

2. Color: As selected by Engineer from manufacturer's standards.

2.3 SHEET MATERIALS

A. Waterproofing Underlayment: CertainTeed "WinterGuard" or pre-approved equal; ASTM D 1970 sheet barrier of self-adhering rubberized asphalt membrane shingle underlayment having internal reinforcement, and "split" back plastic release film; Use in "low slope' areas (below 4:12, but no less than 2:12 pitch); provide material warranty with equal in duration to that of shingles being applied .

1. CertainTeed WinterGuard Granular or pre-approved equal.

2.4 FLASHING MATERIALS

A. Sheet Flashing: See Section 07620 – Sheet Metal Flashing and Trim.

B. Bituminous Paint: Acid and alkali resistant type; black color.

C. Tinner's Paint: Color as selected by Engineer to coordinate with shingle color.

2.5 ACCESSORIES

A. Nails: Standard round wire type roofing nails, corrosion resistant; Type 304 **stainless steel;** minimum 3/8 inch (9.5mm) head diameter; 11 or 12 gage (2.5mm) shank diameter; shank to be sufficient length to penetrate through the roof sheathing or ¾ inch (19mm) into solid wood, plywood or non-veneer wood decking.

B. Asphalt Roofing Cement: ASTM D 4586, Type I or II

2.6 FLASHING FABRICATION

A. Form flashing to profiles indicated on Drawings and to protect roofing materials from physical damage and shed water.

B. Form sections square and accurate to profile, in maximum possible lengths, free from distortion or defects detrimental to appearance or performance.

PART 3 - EXECUTION

3.1 EXAMINATION

A. Verify existing site conditions before starting the work.

B. Verify that roof penetrations and plumbing stacks are in place and flashed to deck surfaces.

C. Verify deck surfaces are dry and free of ridges, warps or voids.

3.2 ROOF DECK PREPARATION

A. Follow shingle manufacturer's recommendations for acceptable roof deck material

B. Broom clean deck surfaces under eave protection and underlayment prior to their application

3.3 INSTALLATION – PROTECTIVE UNDERLAYMENT

A. Roof Slopes between 2:12 and 4:12: Apply one layer of "WinterGuard" or pre-approved

equal over all areas, with end and edges weather lapped minimum of 19 inches (480 mm) Stagger end laps each consecutive layer. Nail in place

3.4 INSTALLATION – VALLEY PROTECTION

A. For "closed-cut," "woven," and "open" valleys, first place one ply of WinterGuard or pre-approved equal, minimum 36 inches (910 mm) wide, centered over valleys. Lap joints minimum of 6 inches (152 mm). Follow instructions of shingle and waterproofing membrane manufacturer.

3.5 INSTALLATION – METAL FLASHING

A. Weather-lap joints minimum 2 inches (50 mm).

B. Seal work projecting through or mounted on roof with asphalt roofing cement and make weather tight.

3.6 INSTALLATION- ASPHALT SHINGLES

A. Install shingles in accordance with manufacturer's instructions for product type and application specified.

3.7 FIELD QUALITY CONTROL

A. Field inspection will be performed under the applicable provisions contained elsewhere within the contract specifications.

B. Visual inspection of the work will be provided by the State. If conditions are unacceptable, the State will notify the Engineer.

3.8 PROTECTION OF FINISHED WORK

A. Protect finished work under the applicable provisions contained elsewhere within the contract specifications.

B. Do not permit traffic over finished roof surface.

C. Any work or materials damaged during the handling of roofing materials shall be restored to their original (undamaged) condition or replaced.

D. The work of other trades shall not be marred or injured. Daubed or splashed surfaces shall be removed and the surface or finish restored to its original finish and appearance.

E. Protective coverings shall be installed at all exposed building walls as necessary to prevent the marring of existing surfaces. Protection shall remain in place for the duration of the roofing work.

F. Protective roof coverings shall be installed at all exposed building areas as necessary to protect exposed building elements and to prevent water intrusion into the building at all times. The Contractor shall furnish protective tarps and/or other temporary roof enclosures as needed.

G. Contractor shall have on hand at the roof appropriate weather protection materials to protect the substrate and building interior during inclement weather.

H. Upon completion of roofing (including associated work), institute appropriate procedures for surveillance and protection of roofing during remainder of construction period. At end of construction period, or at a time when remaining construction will in no way affect or endanger roofing, make a final inspection of roofing and prepare a written report to the Engineer describing nature and extent of deterioration or damage found.

I. Repair or replace (as required) deteriorated or defective work found at time of final inspection to a condition free of damage and deterioration at time of Substantial Completion and in accordance with requirements of specified warranty.

END OF SECTION

SECTION 07530

SINGLE-PLY TPO MEMBRANE ROOFING

PART 1 – GENERAL

1.1 SUMMARY

A. Provide all membrane single-ply sheet roofing including all accessories, insulation and metal flashings, complete as indicated on the drawings and the specifications herein.

B. Related Work:

1. Section 07620 - Sheet Metal Flashing and Trim.

1.2 SUBMITTALS

A. Submit in accordance with Section 01300 - Submittals.

B. Specifications: Submit manufactures materials and detailed installation specifications for the roofing system, which he proposes to use. All materials including membrane, insulation, adhesive, and recovery board shall be as labeled or approved by one manufacturer.

C. Products Data: Submit Manufacturer's Material Product and Data and Material Safety Data Sheets for the following items:

1. Single-ply membrane sheet roofing.

2. Insulation.

3. Adhesive.

4. Recovery Board.

5. Flashing and Flashing accessories.

6. Fasteners & Adhesive.

D. Shop Drawings: Submit five complete sets of shop drawings detailing all roofing conditions. The installation drawings shall indicate the layout of insulation system, the location, and pattern of all fasteners, and all special conditions.

E. Certificates:

1. Contractor Certification: Prior to the start of any work, submit a signed certificate from the proposed roofing manufacturer stating that the roofer is a trained and authorized applicator of the assemblies and that the Manufacturer or the Technical

Representative of the Manufacturer has trained the installation crew in the system's proper installation.

2. Technical Representative Certification: Submit a signed certificate from the proposed roofing manufacturer naming their technical representative and their independent roofing auditor/inspector (where applicable) and attesting that this person is both qualified and authorized to act on and make commitments in their behalf.

3. Warranty Certification: Submit a signed certificate from the Manufacturer or its Technical Representative stating that the plans and specifications for the project have been reviewed and fully comply with the Manufacturer's standards and meet the requirements for warranty of the Complete Roofing System for the specified project.

4. Manufacturer's Certification: TPO membrane supplied for this project is made in its own facility and has had no formulations changes, within the past 10 years.

5. Manufacturer's Certification: Roof membrane manufacturer to certify that metal flashing gauge specified, meets, ANSI/SPRI ES-1 Test Method RE-1.

6. Listing: Submit listing's from national recognized testing laboratory UL, FM or third party testing, indicating the proposed roofing system has a fire classification rating of Class A or B. The listing's report shall also indicate the maximum roof slope permitted for the proposed roofing assembly. Where required, Factory Mutual approval for the roofing system must be clearly noted with the listing's.

7. Performance Requirements: Submit certification by manufactures Technical representative that roofing meets wind-uplift requirements as specified in item entitled "Performance Requirements" herein below.

8. Warranty Certificate: Submit samples of the Manufacturer's Warranty from manufacturer-exhibiting conformance with the item entitled "Warranty and Guarantee" herein below.

9. Warranty and Guarantee: Submit warranty and guarantee as noted under Item entitled "Warranty and Guarantee" herein below.

1.3 WARRANTY AND GUARANTEE

A. The Contractor shall furnish a written guaranty on the roofing membrane system and sheet membrane flashing for a two (2) year period after the Project acceptance Date. The guaranty shall cover seams and damage resulting from a lack of positive drainage (i.e. ponding conditions).

1. Repair of roofing, flashing, roof drains, overflow drains, sealants, etc. as necessary to seal leaks which are attributable to faulty materials and/or workmanship.

B. The roofing system manufacturer shall submit a written 20-year roof membrane system and wind warranty up to 105 mph and flashing endorsement. The warranty shall cover both material and workmanship and shall provide that in the event of failure due to normal weathering not due to abnormal abuse and/or extreme high-winds conditions, beyond that required in item entitled "Performance Requirements" herein below, during the remainder of the warranty period, the roofing system manufacturer will make repairs as necessary to maintain the roof in a watertight condition at no cost to the State. The issuance of the warranty by the manufacturer is acceptance that the roof has been installed in accordance with the manufacturer's instructions. The Surety shall not be liable beyond the two years from the project acceptance date.

1.4 QUALITY ASSURANCE

A. Manufacturers Qualifications: Company specializing in successfully manufacturing the specified TPO membrane in their own facilities and has not had any formulation changes within the last 10 years. Membrane manufacturers shall submit the following certification for review when making substitution requests or submittals.

1. TPO membrane supplied for this project is made in its own facility and has had no formulation changes within the last ten years.

B. The contractor shall visit the job site to verify the site conditions and dimensions prior to submitting a bid.

C. The roofing operations shall be so coordinated with appurtenant work such as sheet metal work that the roofing surfacing operations once started shall be continuous to completion.

D. Total roofing system materials and applications shall be as per manufacturer's recommendations.

E. The roofing contractor shall be an approved applicator of the manufacturer whose insulation and roofing system he proposes to apply and his men shall have been instructed by that insulation and roofing manufacturer (or their representative or independent roofing auditor/inspector) in the proper application of his system.

F. The Roofing and Insulation Manufacturer's Representative and their independent roofing auditor/inspector (where applicable) shall be competent, thoroughly trained and experienced in the work and shall be completely familiar with the products, equipment and the specified requirements and methods needed for the proper installation of the insulation, roofing membrane, flashings, etc.

G. The Contractor, Roofer and the authorized Roofing and Insulation Manufacturer's Representative and/or their independent roofing auditor/inspector shall attend a preconstruction conference to review preparation and installation procedures for the insulation and roofing system and the coordinating and scheduling required with the related trades. They shall also inspect the roof surfaces at the following times where required by manufacturer:

1. At the actual start of the roofing applications.

2. Once during the middle of the roofing application.

3. At job completion.

(Note: It shall be the responsibility of the Contractor to notify the Roofing Manufacturer's Representative or their independent auditor/inspector (where applicable) and the Engineer of his schedule of operations. Parties shall be notified at least 5 days in advance to enable their attendance.)

H. Final inspection shall be done by the person designated by the Roofing System Manufacturer in the presence of the Engineer.

1.5 PERFORMANCE REQUIREMENTS

A. General: Provide installed roofing membrane and base flashings that remain Watertight; do not permit the passage of water, and resist specified uplift pressures, thermally induced movement, and exposure to weather without failure.

B. Material Compatibility: Provide roofing materials that are compatible with one another under conditions of service and application required, as demonstrated by roofing manufacturer based on testing and field experience.

C. Wind Performance: Provide a roofing system that is designed to meet current 2006 IBC wind speeds as a minimum.

D. Fire Safety: Provide roofing system tested from a nationally recognized testing laboratory (Warnock Hersey, Factory Mutual, or Underwriters Laboratories) indicating that the proposed roofing system has a fire classification rating of Class A or Class B.

1.6 PRODUCT HANDLING

A. Delivery of Materials: All roofing materials shall be delivered to the site in the original unbroken manufacturer's wrapping material and containers with the original labels thereon intact. If any unlabeled materials are to be used, a properly attested certificate from the manufacturer stating that such materials comply with the requirements of the Contract Documents shall be furnished to the Engineer prior to installation.

B. Storage of Materials at Job Site:

1. Except when placed on roof decks immediately prior to installation, roofing materials shall be stored above the supporting surfaces, such as on pallets.
2. Recovery board and any other materials, which either absorb or are adversely affected by moisture shall be kept dry. Wet materials and/or materials, which appear to have been deteriorated after getting wet, shall not be permitted to be used on the job and shall be removed.

3. Materials containing solvents shall be stored in a dry, cool area with proper fire and safety precautions.

4. Store liquid materials in their original undamaged containers in a clean, dry, protected location and within the temperature range required by roofing manufacturer. Protect stored liquid material from direct sunlight.

5. If stored on other than the ground, all materials shall be distributed so that their resultant weight does not exceed the design live load on the deck (normally 20 pounds per square foot on roofs and 40 pounds per square foot on floors).

6. Store membrane in the original undisturbed plastic wrap in a cool, shaded area and cover with light-colored, breathable tarpaulins, in a manner to protect it from damage.

1.7 PROTECTION AND CLEANING

A. Protection:

1. Any work or materials damaged during roofing operations shall be restored to their original (undamaged) condition or replaced.

2. Protective coverings shall be installed at all pavement and exposed building walls as necessary to prevent the marring of existing surfaces.

3. Protection shall remain in place for the duration of roofing work.

B. Cleaning:

1. Debris from roofing work shall be removed from the premises and disposed of upon completion and the roof left in good, clean condition.

2. Any adhesive and cements splashed onto adjacent surfaces shall be removed completely, especially from flashing to which sealants must be bonded and/or metal flashings, which are to be painted.

3. Leader heads, scupper, downspouts, etc. shall be cleaned out and all blockages shall be removed prior to acceptance of the project.

1.8 CAUTIONS AND WARNINGS

A. Asphalt roofing cement shall not be used.

B. Oil, grease, mineral solvents, or live steam may be deleterious to certain membrane materials. The Contractor shall apprise the Engineer of and seek the advice of the roofing system manufacturer if such conditions are noted on the site.

C. Vapors from bonding adhesives and lap sealants may be harmful if breathed in. They may also be flammable. The Contractor shall consult container labels and material safety data sheets for specific information on the products being used.

D. Provide rubber gloves, goggles or face shields, rubber boots, protective clothing, and other protective items required or recommended by membrane manufacturer. Ensure that workers are instructed in use of protective items and safety procedures.

E. Spraying of any type of will not be allowed.

PART 2 – PRODUCTS

2.1 ROOFING MEMBRANE MATERIALS

A. Membrane Sheet: Reinforced thermoplastic polyolefin (TPO) membrane sheet, complying with ASTM D 6878. Width and length of sheet shall be as recommended by the manufacturer. Basis of Design: Firestone UltraPly TPO. Approved manufactures; GenFlex, Flex Membrane International or Pre-Approved Equal.

1. Thickness: 60 mils, nominal, and minimum.

2. Exposed Face Color: White.

3. Application: Fully Adhered.

2.2 INSULATION MATERIALS

A. Provide preformed roof insulation boards that comply with the system performance requirements, selected from manufacturer's standard sizes and of thickness indicated.

1. Provide performed tapered & flat insulation boards where indicated for sloping to drain.

2. Provide preformed saddles, crickets, tapered edge strips and other insulation shapes where indicated for sloping to drain. Fabricate to slopes indicated.

3. Do not exceed densities acceptable for the UL Class rating indicated above. Minimum densities are indicated below.

4. Provide insulation boards of a single type and of a single source for tapered insulation to form crickets.

B. Polyisocyanurate Insulation: Rigid roof insulation composed of closed cell polyisocyanurate foam core bonded on each side to fiber reinforced facers, meeting ASTM C 1289 Class I Type II, 20 psi. (Polyisocyanurate only, EPS not permitted) Insulation shall have a average thermal resistance (R factor) of 19 btu/hr./sq. ft.

C. Recovery Board: 5/8 inch thick glass-mat, water-resistant gypsum substrate, meeting ASTM C 1177/C 1177M, Dens-Deck Prime or approved equal. Products made with Cellulose may be submitted for approval, provided that products have passed termite testing by a recognized lab conducting such test.

2.3 ACCESSORY MATERIALS

A. General: Furnish auxiliary materials recommended by roofing system manufacturer for intended use and compatible with TPO roofing.

B. Membrane Bonding Adhesive: Manufacturer's standard bonding adhesive.

C. Sealers and Sealants: As recommended by the manufacturer.

D. Metal Termination Bars: Manufacturer's standard aluminum bars, approximately 1-inch wide, roll formed and pre-punched.

E. Fasteners and Plates: Manufactured supplied factory-coated steel fasteners and metal discs of appropriate type and lengths, designed for fastening system components to substrates meeting 2006 IBC uplift pressure and warranty requirements as specified.

F. Insulation Bonding Adhesive: One or Two-component polyurethane low-rise expanding adhesive for bonding membrane and insulation as recommended by the membrane sheet manufacturer's printed data meeting 2006 IBC uplift and warranty requirements as specified.

G. Miscellaneous Accessories: Provide preformed inside and outside corner sheet flashings, and other accessories recommended by roofing system manufacturer for intended use. Provide products, which are recommended by membrane manufacturer to be fully compatible with indicated substrates, or provide separation materials as required to eliminate contact between incompatible materials.

H. Pourable Sealer: Two-component, solvent free, polyurethane based sealant as furnished by membrane manufacturer to fill and seal pipe penetrations; to create a temporary seal of membrane to substrate when work is interrupted.

I. Sealant Pockets: Prefabricated pockets for sealing irregular and hard to flash penetrations through the membrane.

J. Pipe Flashing: TPO premolded pipe flashing.

K. Edge Metal and Coping:

1. Provide Edge Metal and Coping that is supplied, manufactured, and warranted by Roofing System as part of the manufacturer's full system warranty.

2. Provide Roof Edge Metal meeting, ANSI/SPRI ES-1 Test Method RE-1, .050 aluminum Kynar 500 finish, in manufacturer's standard colors.

3. Provided Coping meeting ANSI/SPRI ES-1 Test Method RE-3, .050 aluminum Kynar 500 finish, in manufactures standard colors.

4. Provide roofing related sheet metal flashings by roof membrane manufacture, i.e., counterflashing in .050 Aluminum Kynar 500 finish, in manufacturers standard colors.

PART 3 – EXECUTION

3.1 PREPARATION

A. Coordinate work with other trades to ensure that components, which are to be incorporated into the roofing system, are available to prevent delays or interruptions as the work progresses. Examine existing roofing substrates to which the roofing materials are to be applied to insure that their condition is satisfactory for its application. Do not permit voids greater than 1/4 –inch wide in the existing roofing substrate. Existing roofing substrates for roofing materials shall be dry and free of oil, dirt, grease, sharp edges and debris. Inspect substrates and correct defects before application of membrane sheets.

B. Clean substrates of dust, debris, moisture and other substances detrimental to roofing installation according to roofing system manufacturer's written instructions.

3.2 SPECIAL PRECAUTIONS

A. Arrange work to prevent use of newly constructed roofing for storage, walking surface, or equipment movement. If access is necessary, provide temporary walkways, platforms or runways to proceed to protect new roofing surfaces and flashing from mechanical damage.

B. Do not dilute coatings or sealants unless specifically recommended by the material manufacturer's printed application instructions. Do not thin liquid materials with cleaners used for cleaning membrane sheet.

C. Keep all liquids in airtight containers and keep containers closed except when removing materials.

D. Use liquid components, including adhesives, within their shelf life period. Store adhesives at 90 to 80 degrees F for at least 24 hours prior to use. Avoid excessive adhesive application and adhesive spills, as they can be destructive to some membranes sheets and insulations; follow adhesive manufacturer's printed application instructions.

E. Do not allow contact between various materials through mixing of remains, dual use of mixing, transporting, or application equipment. Do not use equipment containing the remains of previous materials.

F. Require workmen and others who walk on the membrane to wear clean, soft-soled shoes to avoid damage to roof materials.

G. Do not use equipment with sharp edges which could puncture the membrane sheet.

3.3 APPLICATION

A. General:

1. Workmanship: The roofer shall have a responsible foreman on the job during roofing operations who shall ensure all work is done in accordance with the plans and specifications.

2. No roofing shall be installed during precipitation and shall not be started in the event there is a possibility of precipitation during applications.

3. No roofing shall be started in the absence of the Engineer or his representative. The Contractor shall call the Engineer to give at least one-day (24 hours minimum) advance notice of the starting of roofing operations.

4. The application of roofing shall be as specified and as recommended by the Roofing manufacturer.

5. Absolutely no roofing shall be applied before the deck and the work in Connection therewith have met the following conditions:

   a. Adjoining work, such as scuppers, metal counterflashing, leader heads and collars for vent pipes shall either be in place, ready for the Roofer to work in or shall be available for installation by others, as applicable.

6. Phased construction (roofing purposely interrupted for a period to permit other work and trafficking over the membrane) shall not be permitted.

   a. At the end of the day's work, all incomplete roofing shall be protected using water cut-off and other materials to seal all incomplete edges against intrusion of water.

   b. Water cut-off shall be removed before continuing installation of the roofing System.

B. Insulation Installation:

1. Coordinate installing roofing systems components so insulation is not exposed to precipitation or left exposed at the end of the workday.

2. Comply with roofing system manufacturer's written instructions for installing roof insulation.

3. Install tapered and flat insulation under area of roofing to conform to slopes indicated and to Shop Drawings.

4. Install one or more layers of insulation under areas of roofing to achieve required thickness. Where overall insulation thickness is 2-inches or greater, install required

thickness in 2 or more layers with the joints of each succeeding layer staggered from joints of previous layer a minimum of 6-inches in each direction.

5. Trim surface of insulation where necessary at roof drains so completed surface is flush and does not restrict the flow of water.

6. Install insulation with long joints of insulation in a continuous straight line with end joints staggered between row, abutting edges and ends between boards. Fill gaps exceeding ¼-inch with insulation. Cut and fit insulation within ¼-inch of nailers, projections, and penetrations.

7. Attached insulation: Install each layer of insulation and secure to deck using adhesive or mechanical fasteners specifically designed for securing specified board-type roof insulation to deck type indicated per manufacturer's recommendations.

C. Recovery Board:

1. General:

a. The application of recovery board shall be as specified herein or as shown in the plans unless otherwise stipulated in the specifications and details of the manufacturer of the recovery board being used, as submitted to and approved by the Engineer.

b. Units of recovery board shall be laid with their long joints perpendicular to the direction of laying the roofing membrane or plies.

c. Units of recovery board shall be laid so they touch adjacent units along all sides.

d. The units of recovery board shall be installed in accordance with the recovery board's manufacturer's instructions and recommendations.

2. Acceptability:

a. Recovery board which shows signs of deterioration (such as reduced resistance to delamination, edge disintegrations, etc.) shall not be used.

b. Recovery board, which has been installed but still exposed, shall be covered immediately when there is any danger of precipitation.

c. Installed recovery board which gets wet shall be completely dried out as determined by a moisture meter.

d. Recovery board units with broken corners or similar defects shall be trimmed and repaired (gap filled with similar material) or discarded.

D. Membrane Installation:

1. Apply membrane sheet roofing in accordance with the membrane sheet manufacturer's application instructions and the following requirements.

2. Membrane Sheet Roofing: Unroll prefabricated membrane sheet roofing in position without stretching membrane. Lap sheets a minimum of 6-inches. Inspect for holes.

3. Fully Adhered Application: Apply adhesive evenly and continuously to substrate and underside of sheets at rates recommended by membrane sheet manufacturer's printed application instructions. Allow adhesive to dry to consistency prescribed by manufacturer before adhering sheets to the substrate. Roll each sheet into adhesive to avoid wrinkles; broom or roll to remove air pockets and "fishmouths" and to ensure full, continuous bonding of sheet to substrate. Clean both mating surfaces at splice area, heat weld, lap adjoining sheets, and seal seams according to instructions of membrane sheet manufacturer.

4. Perimeter Fastening: Mechanically secure the membrane sheet to roof perimeter drip edge and termination with specified fasteners. Space fasteners a maximum as required by sheet membrane manufacturer's printed data. Strip flash over the fasteners with a fully adhered layer of flashing material type recommended by the membrane sheet manufacturer's printed data.

5. Temporary Work: Install temporary cutoffs around incomplete edges of roofing assembly at the end of each day's work and when work must be postponed due to inclement weather. Temporary cutoffs provide protection against moisture infiltration and absorption. Remove the temporary seals completely when work resumes. Provide temporary ballast on the roofing as necessary to prevent wind damage to the membrane sheet.

E. Flashing:

1. Install flashing as roofing sheets are installed in accordance with printed instructions of the sheet membrane manufacturer. Extend base flashing as indicated on the drawings above roofing surface. Completely adhere flashing sheets in place. Use prefabricated pipe seals at pipe penetrations.

3.4 INSTALLATION OF ADJOING WORK

A. Unless otherwise shown on the plans, all adjoining work shall be done in accordance with the specifications and details of the manufacturer of the roofing assembly being used. The Contractor shall coordinate the Roofer's installation and any work that requires tying-in with the roofing so that the combined installation is leakproof.

3.5 PROTECTION AND CLEANING

A. Protection:

1. Any work or materials damaged during the handling of roofing materials shall be restored to their original (undamaged) condition or replaced.

2. The work of other trades shall not be marred or injured. Daubed or splashed surfaces shall be removed and the surface or finish restored to its original finish and appearance.

3. Protective coverings shall be installed at all pavement and exposed building walls as necessary to prevent the marring of existing surfaces. Protection shall remain in place for the duration of the roofing work.

4. Protective roof coverings shall be installed at all exposed building areas as necessary to protect exposed building elements and to prevent water intrusion into the building at all times. The Contractor shall furnish protective tarps and/or other temporary roof enclosures as needed.

5. Contractor shall have on hand at the roof appropriate weather protection materials to protect the substrate and building interior during inclement weather.

6. Upon completion of roofing (including associated work), institute appropriate procedures for surveillance and protection of roofing during remainder of construction period. At end of construction period, or at a time when remaining construction will in no way affect or endanger roofing, make a final inspection of roofing and prepare a written report to the Engineer describing nature and extent of deterioration or damage found.

7. Repair or replace (as required) deteriorated or defective work found at time of final inspection to a condition free of damage and deterioration at time of Substantial Completion and in accordance with requirements of specified warranty.

B. Cleaning:

1. Debris from roofing work shall be removed from the premises and disposed of at the end of each working day and upon completion of the work to the satisfaction of the Engineer. The roof shall be left in good, clean condition.

2. Roof drain and overflow roof drain shall be cleaned out and all blockages shall be removed prior to acceptance of the project.

END OF SECTION

SECTION 07540

FLUID APPLIED ROOFING AND DECK COATING SYSTEM

PART 1 – GENERAL

1.1 DESCRIPTION OF WORK

A. Application of fluid applied flexible acrylic and polyester roofing and deck coating system in accordance with specifications, herein.

B. Related Work:

1. Section 07620 - Sheet Metal Flashing and Trim.

1.2 SUBMITTALS

A. Submit in accordance with Section 01300 – Submittals.

B. Product Data: Manufacturer's literature on each product to be used, including:

1. Manufacturer's Literature: Submit literature on the protective coating, meeting ASTM D 6083 as well as related primers, sealants, reinforcement, etc., shall be submitted for review in a single submittal package in accordance with requirements specified in the General Conditions. Include material specifications, physical properties (including ASTM test methods utilized), estimated application rate for required dry film thickness per warranty requirements and MSDS information.

2. Manufacturer's Installation Instructions: Submit data sheets from the manufacturer on the installation of the roofing system applicable to the work.

3. Manufacturer's Certificate: Submit certification that products meet or exceed specified requirements.

4. Manufacturer's Warranty: Submit a copy of the roofing and deck coating manufacturer's warranty to meet project specifications.

5. Manufacturer Storage and Handling: Submit storage and handling requirements and recommendations.

C. Verification Samples: For each finish product specified, two samples, minimum size 6 inches square, represent actual product, color, and patterns.

D. Shop Drawings: Contractor shall submit a scaled drawing showing the layout of joint reinforcing and all flashing details.

1.3 QUALITY ASSURANCE

A. Manufacturer Qualifications:

1. Manufacturer of the fluid-applied elastomeric acrylic coating system shall have a proven 10-year track record of successful installations using advanced elastomeric acrylic technology in the roofing industry.

B. Installer Qualifications:

1. The contractor shall be approved by the coatings manufacturer, and shall have a minimum of three years experience in the application of acrylic elastomeric roof coatings.

2. Proof of this qualification shall be provided in written form by the Contractor. A signed certificate from the Manufacturer stating that the Contractor is an approved installer of the Manufacturer's Fluid Applied Roofing System.

3. The contractor shall provide a list of three project references, including contact name and telephone numbers.

4. An Approved Applicator (as designated by manufacturer) shall be on site during all applications of any manufacturer's products.

5. Contractor shall acknowledge in writing that they are responsible to protect all substrates, insulation, recovery board, and coating from pollutants that may act as a bond-breaker between the various applications of coating. These pollutants include (but not limited to) foot traffic residue, metal shavings, tire tracks, markings caused by hoses and electrical cords, insulation adhesive, sealants, and cementitious materials. All pollutants shall be removed prior to the application of any coatings.

C. Product Standards:

1. The acrylic and polyester reinforced waterproofing system shall have been tested in accordance with ASTM D 6083.

2. Container labels shall include this information or the container shall be rejected at the jobsite. Manufacturer's name, product name, type, and class of material. Batch or lot number, mixing and application instructions, and precautions.

D. Codes and Standards: The contractor shall be thoroughly familiar with all codes, regulations, and standards governing the specified work. Any contradiction between the manufacturer's requirements and these specifications shall be brought to the attention of the manufacturer and the Engineer.

E. Deviations: There shall not be any deviations from these specifications unless the deviation is submitted in writing per the General Conditions prior to submittal of bid. The request for

deviation shall have a letter from the roofing manufacturer technical department approving the details of the deviation.

1.4 DELIVERY, STORAGE, AND HANDLING

A. Delivery of Materials: Materials shall be delivered to the jobsite in manufacturer's original, sealed containers with labels legible and intact.

1. Deliver materials bearing the following information:

a. Name of manufacturer.

b. Name of contents and products code.

c. Lot or batch number.

B. Storage of Materials: Materials shall be stored in an area specifically designated for that purpose, in accordance with manufacturer's recommendations, where temperatures shall not be less than 50 degree F (10 degree C) or higher than 100 degree F (38 degree C).

C. Material Handling: Materials shall be handled, stored, and installed per manufacturer's instructions and all applicable safety regulatory requirements.

D. Damaged Materials:

1. Contaminated, damaged, or unsealed materials, or materials not conforming to the specifications, shall be rejected. Rejected materials shall be immediately removed from the jobsite and replaced at no additional cost to the City.

2. Materials that have been installed and damaged prior to issuance of warranty shall be rejected and removed from the jobsite. This includes materials not protected from unprotected foot traffic, materials that were unprotected and used as a staging platform or storage area, materials that have been polluted with dirt, debris, metal shavings, and other roofing materials, and or materials damaged by water intrusion.

1.5 PROJECT CONDITIONS

A. Install all materials in strict accordance with manufacturer's published safety requirements and weather precautions.

B. Do not apply materials over dirt, oil, grease, or other pollutants (this includes foot traffic or markings caused by hoses, electrical cords or tires). All dirt or markings shall be removed prior to the installation of the various applications of coating used to produce the fluid applied roof system.

C. Do not apply elastomeric acrylic coating system components when the Ambient temperature is below 50 degree F (10 degree C) or above 110 Degree F (43 degree C), if any surface moisture is present, when the dew point is within 5 degree F (3 degree C) of the surface

temperature or when there is a possibility of temperatures falling below 32 degree F (0 degree C) within a 24 hour period.

D. Do not apply elastomeric acrylic coating system components if weather conditions will not permit complete cure before rain, dew, fog, or freezing temperatures occur.

E. Do not spray-apply if the wind velocity exceeds 10 mph (16 kph) without taking precautions to eliminate warranty.

F. Take all measures necessary to protect unrelated surfaces from coating overspray or spillage.

G. The contractor is responsible for any adverse conditions, which may result from applying coatings while the weather is rising during the morning hours, which might result in moisture being pulled upwards from the deck, which can result in vapor pockets forming.

1.6 WARRANTY (NOT USED)

PART 2 – PRODUCTS

2.1 MANUFACTURERS

A. Acceptable Manufacturer: Manufacturer that meets all of the required requirements of this specification including but not limited to the following:

Metacrylics Roof Coating
365 Obata Way, Gilroy, CA 95020
Phone: 800-660-6950
or approved equal.

B. Acrylic coatings containing only 100 percent acrylic polymers shall be used. Materials such as cementitious, ceramic-filled or asphalt modified coatings, moisture-cured urethanes, Kraton-based rubbers, Hypalons and butyls are not considered acceptable substitutes for materials specified herein.

2.2 SYSTEM DESRIPTION

The Fluid Applied Roofing and Deck Coating System shall be composed of polyester fabric, base coat, and top coat with a minimum 45-mil cured thickness

A. Fluid Applied Coatings: Flexible 100% acrylic coating system meeting ASTM D 6083.

1. Thickness: 45 mils, minimum.

2. Exposed Face Color: Color to as selected from manufacturers standard colors.

2.3 FLUID APPLIED ROOFING COATING MATERIALS

A. Construction Grade Caulk:

1. See Section 07920 - Sealants and Caulking.

B. Base and Intermediate Coatings:

1. Water-based, high solids, elastomeric acrylic coating shall be internally plasticized to provide a permanently flexible, weather-resistant base and intermediate coat.

a. Provide Metacrylics Acrylic Base Coat or Pre-Approved Equal.

C. Top Coat:

1. Water-based, high solids elastomeric acrylic coating shall be internally plasticized to provide a permanently flexible, weather-resistant top coat.

a. Provide Metacrylics Color Top Coat or Pre-Approved Equal.

2. Top Coats shall be applied in separate applications.

D. Reinforcing Fabric:

1. Material shall be non-woven 100% polyester, stitch bonded, and heat set fabric as recommended and supplied by the roofing manufacturer.

a. Provide Metacrylic Warp-Knit Fabric

E. Primers and Sealers:

1. As recommended by manufacturer.

F. Cover Board: ASTM C 1177/C 1177M, glass mat, water resistant gypsum substrate, not less than 1/2 inch thick.

1. Provide "Dens-Deck Prime" by Georgia-Pacific Corporation or Pre-Approved Equal.

G. Fasteners: Factory-coated steel fasteners and metal or plastic plates meeting corrosion-resistance provisions in FMG 4470, designed for fastening roofing membrane components to substrate, tested by manufacturer for required pullout strength, and acceptable to roofing system manufacturer.

1. Provide Firestone AP Fasteners and Plates

H. Biodegradable Cleaner:

1. All cleaners shall be biodegradable and shall be mixed in accordance with manufacturer's instructions.

2. Material Properties:

a. Biodegradable: Allows proper cleaning of substrates where washing with hazardous cleaning products would not be permitted prior to (re)coating.

b. Open Dry Time: Remove dirt, pollutants, and other contamination build-up even if the product dries prior to rinsing.

c. Environmentally Safe: Will not hard ground vegetation, water collection ponds, septic tanks or treatment plants even in its concentrated form, nor will accidental ingestion by animal life cause adverse side effects.

d. Agency Approval: Meet requirements of City and County, State and Federal Agencies.

PART 3 – EXECUTION

3.1 EXAMINATION

A. Do not begin installation until substrates have been properly prepared.

B. If substrate preparation is the responsibility of another installer, notify the State of unsatisfactory preparation before proceeding. Proceeding with work will imply acceptance of the conditions by the roofing contractor/installer.

C. Verify that all penetrations, rooftop units, HVAC equipment are secured to roof system. All HVAC intake vents are to be secured or closed during system installation.

3.2 SURFACE INSPECTION

A. Roof substrate shall be clean, dry, structurally sound, stable and well secured.

B. The roof substrate shall be dry (free of water).

C. Roof substrates that do not have adequate slope to cause water to flow to the roof drains or off of the roof shall be covered with tapered insulation. All substrates or substrates covered with tapered insulation shall produce positive drainage of water from the roof.

D. Inspect condition of flashing details adjacent to protrusions, penetrations, roof mounted equipment, curbs, walls, parapets, drains and roof edge to ensure that details are acceptable and will maintain a weather-tight installation after being properly detailed and coated.

3.3 PREPARATION OF ROOF DECK

A. All surfaces shall be clean and dry, and free of any dirt, dust, gravel, oil, surface chemicals or other contaminants that may interfere with optimum adhesion.

3.4 INSTALLATION OF COVER BOARD (IF APPLICABLE)

A. Install only as much as can be covered with the completed roofing system before the end of the day's work or before the onset of inclement weather.

B. Lay in courses parallel to roof edges.

C. Neatly fit to all penetrations, projections, and nailers.

D. Fit tightly, with gaps not greater than 1/4 inch. All gaps greater that ¼" shall be filled with acceptable insulation. Under no circumstances shall the roofing membrane be left unsupported over a space greater than 1/4 inch.

E. Miter edges at ridge, valley, and other similar non-planar conditions.

F. Stagger all joints between layers at least 6".

G. Attachment:

1. Attach cover board with mechanical attachment, meeting 90 pounds of uplift pressure.

H. Stripping – In Joints

1. Three course joints with base coat, 4 inch fabric, base coat and allow to dry, before proceeding applying base, intermediate, and polyester fabric.

3.5 INSTALLATION OF BASE AND POLYESTER FABRIC

A. Base and Intermediate Coat and Fabric Components: Consists of one coat of base coat applied to the substrate, one ply of the polyester fabric (sizes vary) laid into the wet base coat, and finally a second coat of base (intermediate) coat saturating the fabric from above. Care shall be given to ensure that adjacent runs of fabric are overlapped a minimum of 4 inches (10 cm). Base and intermediate coats are applied over a smooth surface at a total rate of 2.5 gallons per 100 square feet of fabric (this application rate is over a smooth and non-porous substrate, coverage rate will decrease depending on surface texture and porosity). Base coat shall only be applied with the use of approved roof brushes or as recommended by the manufacturer. Rolling, brushing and spraying of the base and intermediate coats as recommended by the manufacturers and local condition. The dry mil thickness of membrane produced with the base and intermediate coat and polyester fabric shall be a minimum thickness of 28 mils (dry).

B. Protection of Base Coat and Polyester Fabric Membrane: It is the contractor's responsibility to protect the membrane produced by the foundation and intermediate coat and polyester fabric from damages. All membranes that are damaged shall be rejected and removed from the job site. Damages shall include (but not limited to) coatings being marked with pollutants that may act as a bond-breaker between the various applications of coating. These pollutants include (but not limited to) foot traffic residue, metal shavings, tire tracks, markings caused

by hoses and electrical cords, insulation adhesive, sealants, and cementitious materials. All pollutants shall be removed prior to the application of any coatings. Walking on the coating while the coating and fabric is wet is forbidden. Walking on the membrane with shoes that are not covered with protective shoes coverings (example: painter's booties) is forbidden. Using the membrane as a staging platform without laying plywood on the surface to protect the membrane is forbidden. Allowing pools of water to sit on the coating during the first seven days (pools of water must be brushed off each morning).

C. Encapsulation of Roof Penetrations - Using 12 inch (30 centimeters) fabric and the base components seal items projecting through waterproofing material watertight. Waterproof up penetrations a minimum of 6 inch (15 centimeters).

3.6 INSTALLATION OF TOP COAT

A. Top Coat Component: Apply 2 separate applications of the top coat. Each application must be applied at a dry mil thickness of 10 mils (minimum). Each application shall be applied at rate of 1.25 gallon per 100 square feet per application. The total application rate shall be 2.5 gallons per 100 square feet. Allow the first application to dry prior to the application of the second application. Allow the following applications to dry before the application of the next coat and so on. Total top coat dry film thickness shall be a minimum of 20 mils.

B. Protection of Top Coat: It is the Contractor's responsibility to protect the top coat from damages. All top coats that are damaged shall be rejected and removed from the job site. Damages shall include (but not limited to) coatings being marked with pollutants that may act as a bond-breaker between the various applications of coating. These pollutants include (but not limited to) foot traffic residue, metal shavings, tire tracks, markings caused by hoses and electrical cords, insulation adhesive, sealants, and cementitious materials. All pollutants shall be removed prior to the application of any coatings. Furthermore, walking on the coating while the coating is wet is forbidden. Walking on the coating with shoes that are not covered with protective coverings (example: painter's booties) is forbidden. Using the coating or the coating membrane system as a staging platform without laying plywood on the surface to protect the membrane is forbidden. Allowing pools of water to sit on the coating during the first seven days (pools of water must be brushed off each morning).

3.7 CLEANUP

A. Maintain work and work areas in a clean, safe condition at all times during coating installation. Remove excess materials, trash, and debris from the jobsite daily.

B. At the completion of the project, clean area of any spills and containers, and clean up all roofing debris, leaving jobsite in a clean and orderly condition.

C. As a condition of the project's completion and acceptance, deliver to the Officer-in-Charge a copy of the full executed, specified warranty from the coating manufacturer, following individual warranty guidelines.

3.8 PROTECTION

A. Protect installed products until completion of project.

B. Touch-up, repair, or replace damaged products before Substantial Completion.

END OF SECTION

SECTION 07620

SHEET METAL FLASHING AND TRIM

PART 1 – GENERAL

1.1 SUMMARY

A. This section includes sheet metal flashing and trim in the following categories:

1. Metal counter flashing.

2. Embedded edge factory-coated metal perimeter edge flashing.

3. Collar flashings.

4. Gutters and downspouts.

5. Roof accessories.

B. Related Sections: the following Sections contain requirements that relate to this Section:

1. Section 07310 – Asphalt Shingles.

2. Section 07530 – Single-Ply TPO Membrane Roofing.

3. Section 07920 - Sealants and Caulking.

1.2 PERFORMANCE REQUIREMENTS

A. General: Use roofing manufacturer's standard flashings, collar flashings, curbs, and other roof accessories.

B. General: Install sheet metal flashing, trim, gutters, and downspouts to withstand wind loads, structural movement, thermally induced movement, and exposure to weather without failing.

1.3 SUBMITTALS

A. Submit in accordance with Section 01300 - Submittals.

B. Shop Drawings: Layout, profiles, methods of joining, and anchorage details of each item specified.

C. Qualification Data: Firms and persons specified in the "Quality Assurance" Article to demonstrate their capabilities and experience. Include lists of completed projects with

project names and addresses, names and addresses of owners and other information specified.

1.4 QUALITY ASSURANCE

Installer Qualifications: Engage an experienced Installer who has completed sheet metal flashing and trim work similar in material, design, and extent to that indicated for this Project and with a record of successful in-service performance.

Sheet metal shall comply with:

Galvanized Sheets	ASTM A653
Aluminum Sheets	ASTM A209
Zincalume Sheets	ASTM A792
Copper Sheets	ASTM A370

1.5 PROJECT CONDITIONS

Coordinate work of this Section with interfacing and adjoining Work for proper sequencing of each installation. Ensure best possible weather resistance, durability of Work, and protection of materials and finishes.

1.6 WARRANTY

A. The warranty provisions and number of years for the warrantee by this article shall take precedence over the standard provisions in the GENERAL CONDITIONS.

B. Project Warranty: Submit Contractor's warranty, signed jointly by Installer covering work of this section, including all components of flashing system such as panels, base flashing, roofing accessories, fasteners, curbs, collar flashing, and other products, for the following warranty period and conditions:

1. Warranty Period: Two (2) years from the Project Acceptance Date.

2. Warranty shall cover repairs or replacement of damages to the building and its finishes due to leaks.

PART 2 – PRODUCTS/MATERIALS

2.1 METALS

Galvalume Plus Sheet: Galvalume Plus Sheet, color and finish to be selected by the Engineer.

2.2 COUNTERFLASHING WIND-RESTRAINT CLIPS

Provide clips to be installed before counter flashing to prevent wind uplift of the counter flashing lower edge.

Material: Galvalume Plus Sheet, color and finish to be selected by the Engineer.

2.3 MISCELLANEOUS MATERIALS AND ACCESSORIES

A. Solder: ASTM B 32, Grade Sn50, used with rosin flux.

B. Fasteners: Same metal as sheet metal flashing or other non-corrosive metal as recommended by sheet metal manufacturer. Match finish of exposed heads with material being fastened.

   1. Provide barbed, annular ring, or screw shank nails of sufficient length to achieve 1-1/4 inch penetration into nailer.

C. Gutter Brackets: Steel, 1/8- x 1-inch, G90 hot dipped stainless.

D. Asphalt Mastic: SSPC-Paint 12, solvent-type asphalt mastic, nominally free of sulfur and containing no asbestos fibers, compounded for 15-mil (0.4-mm) dry film thickness per coat.

E. Mastic Sealant: Polyisobutylene; non-hardening, non-skinning, non-drying, non-migrating sealant.

F. Elastomeric Sealant: Generic type recommended by sheet metal manufacturer and fabricator of components being sealed and complying with requirements for joint sealants as specified in Section 07920 "Sealants & Caulking".

G. Adhesives: Type recommended by flashing sheet metal manufacturer for waterproof and weather-resistant seaming and adhesive application of flashing sheet metal.

H. Paper Slip Sheet: 5-lb/sq. (0.244 kg/sq. m) red rosin, sized building paper conforming to FS UU-B-790, Type I, Style 1b.

I. Metal Accessories: Provide sheet metal clips, straps, anchoring devices, and similar accessory units as required for installation of Work, matching or compatible with material being installed; non-corrosive; size and thickness required for performance.

2.4 FABRICATION, GENERAL

A. Sheet Metal Fabrication Standard: Fabricate sheet metal flashing and trim to comply with recommendations of the National Roofing Contractors Association (NRCA) and the Sheet Metal and Air Conditioning Contractors' National Association's (SMACNA's) "Architectural Sheet Metal Manual" that apply to the design, dimensions, metal, and other characteristics of the item indicated.

B. Comply with details shown to fabricate sheet metal flashing and trim that fit substrates and result in waterproof and weather-resistant performance once installed. Verify shapes and dimensions of surfaces to be covered before fabricating sheet metal.

C. Form exposed sheet metal Work that is without excessive oil canning, buckling, and tool marks and that is true to line and levels indicated, with exposed edges folded back to form hems.

D. Seams: Fabricate nonmoving seams in sheet metal with flat-lock seams. Tin edges to be seamed, form seams, and solder.

E. Expansion Provisions: Space movement joints at maximum of 10 feet (3m) with no joints allowed within 24 inches (610 mm) of corner or intersection. Where lapped or bayonet-type expansion provisions in Work cannot be used or would not be sufficiently weatherproof and waterproof, form expansion joints of intermeshing hooked flanges, not less than 1 inch (25 mm) deep, filled with mastic sealant (concealed within joints).

F. Sealed Joints: Form non-expansion, but movable, joints in metal to accommodate elastomeric sealant to comply with SMACNA standards.

G. Separate metal from non-compatible metal or corrosive substrates by coating concealed surfaces at locations of contact with asphalt mastic or other permanent separation as recommended by manufacturer.

H. Conceal fasteners and expansion provisions where possible. Exposed fasteners are not allowed on faces of sheet metal exposed to public view.

I. Fabricate cleats and attachment devices from same material as sheet metal component being anchored or from compatible, non-corrosive metal recommended by sheet metal manufacturer.

   1. Size: As recommended by SMACNA manual or sheet metal manufacturer for application but never less than thickness of metal being secured.

2.5 SHEET METAL FABRICATIONS

A. General: Fabricate sheet metal items in thickness or weight needed to comply with performance requirements but not less than that listed below for each application and metal.

B. Edge Trim: Fabricate from coated metal per roofing manufacturer.

C. Counter flashing: Fabricate from coated metal per roofing manufacturer.

D. Gutter: Fabricate from stainless steel sheet.

E. Downspout: Fabricate from PVC.

PART 3 – EXECUTION

3.1 EXAMINATION

Examine substrates and conditions under which sheet metal flashing and trim are to be installed and verify that Work may properly commence. Do not proceed with installation until unsatisfactory conditions have been corrected.

3.2 INSTALLATION

A. General: Unless otherwise indicated, install sheet metal flashing and trim to comply with performance requirements, manufacturer's installation instructions, and SMACNA's "Architectural Sheet Metal Manual". Anchor units of Work securely in place by methods indicated, providing for thermal expansion of metal units; conceal fasteners where possible, and set units true to line and level as indicated. Install Work with laps, joints, and seams that will be permanently watertight and weatherproof.

B. Install exposed sheet metal Work that is without excessive oil canning, buckling, and tool marks and that is true to line and levels indicated, with exposed edges folded back to form hems. Install sheet metal flashing and trim to fit substrates and to result in waterproof and weather-resistant performance. Verify shapes and dimensions of surfaces to be covered before fabricating sheet metal.

C. Expansion Provisions: Provide for thermal expansion of exposed sheet metal Work. Space movement joints at maximum of 10 feet (3m) with no joints allowed within 24 inches (610 mm) of corner or intersection. Where lapped or bayonet-type expansion provisions in Work cannot be used or would no be sufficiently weatherproof and waterproof, form expansion joints of intermeshing hooked flanges, not less than 1 inch (25 mm) deep, filled with mastic sealant (concealed within joints).

D. Sealed Joints: Form non-expansion, but movable, joints in metal to accommodate elastomeric sealant to comply with SMACNA standards. Fill joint with sealant and form metal to completely conceal sealant.

   1. Use joint adhesive for nonmoving joints specified not to be soldered.

E. Seams: Fabricate nonmoving seams in sheet metal with flat-lock seams. Tin edges to be seamed, form seams, and solder.

F. Separations: Separate metal from non-compatible metal or corrosive substrates by coating concealed surfaces, at locations of contact, with asphalt mastic or other permanent separation as recommended by manufacturer.

   1. Underlayment: Where installing stainless steel or aluminum directly on cementitious or wood substrates, install a slip-sheet of red-rosin paper and a course of polyethylene underlayment.

2. Bed flanges of Work in a thick coat of roofing cement where required for waterproof performance.

G. Counter flashings: Coordinate installation of counter flashings with installation of assemblies to be protected by counter flashing. Install counter flashings in receivers. Secure in a waterproof manner by means of snap-in installation and sealant, lead wedges and sealant, interlocking folded seam, or blind rivets and sealant. Lap counter flashing joints a minimum of 2 inches (50 mm) and bed with sealant.

H. Equipment Support Flashing: Coordinate equipment support flashing installation with roofing and equipment installation. Weld or seal flashing to equipment support member.

I. Roof-Penetration Flashing: Coordinate roof-penetration flashing installation with roofing and installation of items penetrating roof. Install flashing as per roof membrane manufacturer's written instructions.

3.3 CLEANING AND PROTECTION

A. Clean exposed metal surfaces daily during installation using water or by sweeping or blowing, removing substances that might cause corrosion of metal or deterioration of finishes. Do not use chemicals to clean the exposed metal surfaces.

B. Provide final protection and maintain conditions that ensure sheet metal flashing and trim Work during construction is without damage or deterioration other than natural weathering at the time of Project Completion.

END OF SECTION

SECTION 07920

SEALANTS AND CAULKING

PART 1 - GENERAL

1.1 RELATED DOCUMENTS

A. The General Conditions and Special Provisions preceding these specifications shall apply to the work specified in this section.

1.2 GENERAL REQUIREMENTS

A. Work Included: Completely close with sealants all joints indicated or specified to be sealed to a watertight condition.

1.3 SUBMITTALS

A. Manufacturer's Data: Submit copies of manufacturer's product data and specifications for type of sealant required.

B. Color Samples: If applicable, submit color finish samples of sealants.

1.4 JOB CONDITIONS

A. Examine joint surfaces and backing, and their anchorage to the structure, and conditions under which joint sealer work is to be performed, and notify Contractor in writing of conditions detrimental to proper completion of the work and performance of sealers. Do not proceed with joint sealer work until unsatisfactory conditions have been corrected in a manner acceptable to Installer.

B. Weather Conditions: Do not proceed with installation of sealants under adverse weather conditions. Proceed with the work only when forecasted weather conditions are favorable for proper cure and development of high early bond strength.

1.5 PRODUCT HANDLING

A. Delivery: Deliver sealants to the job site in sealed containers labeled to show the designated name, formula, or specification number, lot number, color, date of manufacture, shelf life, curing time, manufacturer's directions, and name of manufacturer.

PART 2 - PRODUCTS

2.1 MATERIALS

A. Sealant Backer Rod: Compressible rod stock of polyethylene foam, polyethylene-jacketed polyurethane foam, butyl rubber foam, neoprene foam or other flexible, permanent, durable, non-absorptive material as recommended for compatibility with sealant by the sealant manufacturer to control the joint for sealant placement, to break bond of sealant at bottom of joint, to form optimum shape of sealant bead on back side, and to provide a highly compressible which will minimize the possibility of sealant extrusion when joint is compressed.

B. Bond-Breaker Tape: Polyethylene tape or other plastic tape as recommended by sealant manufacturer.

C. Primer for Sealants: Non-staining, as recommended by the sealant manufacturer.

D. Sealant:

1. At Exterior Vertical and Overhead Joints: One-part polyurethane-based sealant, conforming to ASTM C 920, Type S, Grade NS, Use NT, Class 25 as applicable. Provide one of the following, or approved equal.

   a. Dymonic; Tremco

   b. Chem-Calk 900; Bostic Construction Products Div.

   c. Sikaflex la; Sika Corp.

2. At Interior Vertical and Overhead Joints: Non-Elastomeric Sealant; acrylic-emulsion type, conforming to ASTM C 834. Provide one of the following, or approved equal:

   a. Rubber Calk 280; PRC.

   b. Acrylic Latex Caulk; Tremco

   c. Chem-Calk 600; Bostik Construction Products Div.

3. At Horizontal Joints: Two-part polyurethane-based sealant, conforming to ASTM C 920, Type M, Grade P, Use T, Class 25. Provide one of the following, or an approved equal:

   a. THC-900; Tremco

   b. Sikaflex 2c SL; Sika Corp.

4. Acoustical Sealant: Resilient, non-staining, non-shrinking, non-hardening, non-skinning, non-drying, non-sag sealant intended for interior sealing of concealed construction joints; complying with ASTM C 834. Provide one of the following or approved equal.

   a. BA-98; Pecora Corp.

   b. Tremco Acoustical Sealant; Tremco

   c. "Sheetrock" Acoustical Sealant; U.S. Gypsum Co.

5. Silicone Sealant: Mildew-resistant; Type S; Grade NS; Class 25; Use NT, formulated with fungicide; intended for sealing interior joints between plumbing fixtures and wall surfaces. Provide one of the following or approved equal:

   a. Dow Corning 786; Dow Corning Corp.

   b. SCS 1702 Sanitary; General Electric Co.

   c. Proglaze White; Tremco

   d. Omni Plus; Sonneborn

6. Roofing Sealant(s): Provide sealant(s) as required by the roofing manufacturer.

PART 3 - EXECUTION

3.1 INSTALLATION

A. Examine joints indicated to receive joint sealer, with Installer present, for compliance with requirements for joint configuration, installation tolerances and other conditions affecting joint sealers until unsatisfactory conditions have been corrected.

3.2 PREPARATION

A. Surface Cleaning of Joints: Clean out joints immediately before installing joint sealers to comply with recommendations of joint sealer manufacturers and the following requirements:

   1. Remove all foreign material from joint substrates which could interfere with adhesion of joint sealer, including dust; paints, except for permanent, protective coatings tested and approved for sealant adhesion and compatibility by sealant manufacturer; oil; grease; water; and surface dirt.

   2. Clean concrete, masonry, unglazed surfaces of ceramic tile and similar porous joint substrate surfaces, by brushing, grinding, blast cleaning, mechanical abrading, or a combination of these methods to produce a clean, sound substrate capable of

developing optimum bond with joint sealers. Remove loose particles remaining from above cleaning operations by vacuuming or blowing out joints with oil-free compressed air.

3. Remove laitance and form release agents from concrete.

4. Clean metal, glass; and other nonporous surfaces by chemical cleaners or other means which are not harmful to substrates or leave residues capable of interfering with adhesion of joint surfaces.

B. Joint Priming: Prime joint substrates where indicated or where recommended by joint sealer manufacturer based on preconstruction joint sealer-substrate tests or prior experience. Apply primer to comply with joint sealer manufacturer's recommendations. Confine primers to areas of joint sealer bond, do not allow spillage or migration onto adjoining surfaces.

C. Masking Tape: Use masking tape where required to prevent contact of sealant with adjoining surfaces which otherwise would be permanently stained or damaged by such contact or by cleaning methods required to remove sealant smears. Remove tape immediately after tooling without disturbing joint seal.

3.3 INSTALLATION OF JOINT SEALERS

A. General: Comply with joint sealer manufacturer's printed installation instructions applicable to products and application indicated, except where more stringent requirements apply.

B. Sealant Installation Standard: Comply with recommendations or ASTM C 1193 for use of joint sealants as applicable to materials, applications and conditions indicated.

C. Latex Sealant Installation Standard: Comply with requirements of ASTM C 790 for use of latex sealants.

D. Acoustical Sealant Application Standard: Comply with recommendations of ASTM C 19 for use of joint sealants in acoustical applications as applicable to materials, applications, and conditions indicated.

E. Installation of Sealant Backings: Install sealant backings to comply with the following requirements:

1. Install joint fillers of type indicated to provide support of sealants during application and at position required to produce the cross-sectional shapes and depths of installed sealants relative to joint widths which allow optimum sealant move capability.

a. Do not leave gaps between ends of joint fillers.

b. Do not stretch, twist, puncture, or tear joint fillers.

c. Remove absorbent joint fillers which have become wet prior to sealant application and replace with dry material.

2. Install bond breaker tape between sealants and joint fillers, compression seals, or back of joints where adhesion of sealant to surfaces at back of joints would result in sealant failure.

3. Install compressible seals serving as sealant backings to comply with requirements indicated above for joint fillers.

F. Installation of Sealants: Install sealants by proven techniques that result in sealants directly contacting and fully wetting joint substrates, completely filling recesses provided for each joint configuration, and providing uniform, cross-sectional shapes and depths relative to joint widths which allow optimum sealant movement capability.

G. Tooling of Nonsag Sealants: Immediately after sealant applications and prior to time skinning or curing begins, tool sealants to form smooth, uniform beads of configuration indicated, to eliminate air pockets, and to ensure contact and adhesion of sealant with sides of joint. Remove excess sealants from surfaces adjacent to joint. Do not use tooling agents which discolor sealants or adjacent surfaces or are not approved by sealant manufacturer.

1. Provide concave joint configuration per Figure 5A in ASTM C 1193, unless otherwise indicated.

2. Provide flush joint configuration per Figure 5B in ASTM C 1193, where indicated.

3.4 CLEANING

A. Clean off excess sealants or sealant smears adjacent to joints as work progresses by methods and with cleaning materials approved by manufacturers by joint sealers and of products in which joint occur.

3.5 PROTECTION

A. Protect joint sealers during and after curing period from contact with contaminating substances or form damage resulting from construction operations or other causes so that they are without deterioration or damage at time of Substantial Completion. If, despite such protection, damage or deterioration occurs, cut out and remove damaged or deteriorated joint sealers immediately and reseal joints with new material to produce joint sealer installations with repaired areas indistinguishable from original work.

END OF SECTION

DIVISION 8 – DOORS AND WINDOWS

SECTION 08560

VINYL WINDOWS

PART 1 - GENERAL

1.1 REFERENCES

The publications listed below form a part of this specification to the extent referenced. The publications are referred to in the text by the basic designation only.

A. American Architectural Manufacturers Association (AAMA)

AAMA 1986 (addendum 1989) Poly (Vinyl Chloride) (PVC Prime windows and Sliding Glass Doors).

B. American Society For Testing And Materials (ASTM)

ASTM D 4099 1989 Poly (Vinyl Chloride) (PVC) Prime Windows/Sliding Glass Doors

C. City and County of Honolulu Building Department (meant to be the same as the Department of Planning and Permitting) Specifications

1. Extruders AAMA certification every two years, also complying with ASTM standards D-4726 and D-4099 and further certifying a smoke density rating no greater than 450 in accordance with ASTM-E84 and a self ignition temperature no lower than 650°F in accordance with ASTM D-1929.

2. Manufacturer must be approved, in writing, by the City and County of Honolulu Building Department for use in high rise buildings.

D. State of Hawaii D.A.G.S.

Hawaii Products Preference List.

1.2 DESCRIPTION OF WORK

Work Included: Jalousie Windows.

1.3 SAMPLE MOCK-UP

If requested by the Engineer or Authority, submit a complete sample mock-up of the vinyl window and screen, minimum size of approximately 16" wide by 16" high, together with

manufacturers technical specifications shall be submitted for approval by the Authority, before installation. The Authority has the prerogative to dismantle the sample for inspection and evaluation. Material not approved shall not be used in the project and furthermore such material shall be subject to removal at Contractor's expense, if installed.

1.4 QUALITY ASSURANCE

A. Labels: Each window unit shall bear a certification label from an independent, nationally recognized testing organization validating that the product complies with AAMA 101V for the type, grade, and performance class specified or that the product complies with ASTM D 4099 for the grade specified.

B. Certification: Certified test reports attesting that the window units meet the requirements of AAMA 101V or ASTM D 4099 as specified will be acceptable in lieu of product labeling or marking.

1.5 SUBMITTALS

A. Product Data: Submit manufacturer's descriptive literature and data along with shop drawing for review.

B. Shop Drawings: Submit shop drawings to the authority for review prior to fabrication.

1.6 DELIVERY, STORAGE AND HANDLING

Deliver windows to the project site in an undamaged condition. Use care in handling and hoisting windows during transportation and at the job site. Store windows, and components out of contact with the ground, under a weathertight covering, with no direct sunlight. The storage area must have adequate ventilation. Keep windows upright. Repair damaged windows to an "as new" condition as approved. Provide new units if windows cannot be repaired.

PART 2 - PRODUCTS

2.1 GENERAL REQUIREMENTS FOR WINDOWS

Windows shall conform to requirements specified herein and be the products of Coastal Windows Inc. or approved equal. Provide windows of materials, types, grades, performance classes, combinations and sizes indicated or specified. Each window shall be a unit consisting of frame, sash, glass, hardware, mullions, screen, weatherstripping, and accessories complete. Design windows to accommodate glass, hardware, screens, weatherstripping, and accessories to be furnished. Glass shall be factory installed.

2.2 MATERIALS

A. Windows: Provide P.V.C. frames with an exterior wall thickness no less than .070 thousands. P.V.C. that complies with AAMA 101V, ASTM D 4099 and Honolulu Building Department Specifications as indicated in the General references.

B. Glass and Glazing: Single Glazed as specified in Glazing section.

C. Caulking and Sealing: As specified in Sealants Section.

D. Screens: ASTM D3656, 18 x 16 or 18 x 14 fiberglass mesh, color to be charcoal, and as specified in fabrication section.

E. Accessories: As standard with the manufacturer and as specified herein.

F. Hardware: As specified in window types.

2.3 WINDOW TYPES

A. General: Water test pressure shall be minimum 5.25 psf for rating on all windows except jalousie.

B. Jalousie Windows:

1. General:

a. Full surround thermally fused vinyl frame to be a minimum of 5" deep so as to permit use of 4" or 6" glass without interference with the screen.

b. Frames to slope to the outside so as to provide positive water drainage to the exterior.

c. All frames to have integral mulling grooves permitting multiple back to back mounting. Exterior surface of frame to have a relief area to permit insertion of 1/8" x 2" steel reinforcement in mulled assembles over 48" high.

d. All frames to have integral flange located 4" from inside edge so as to finish flush with interior dry wall surface on standard 2" x 4" wall eliminating need for drywall returns.

e. Head and sill to have a 5/8" high water baffle with integral soft vinyl seal.

2. Hardware:

a. All hardware to be of the aluminum enclosed channel type. White channel to be powder coated finish or bronze channel anodized finish. All pivoting mechanisms enclosed. On slave side of hardware set, there shall be no metal operating parts.

b. All blade clips to be of injection molded ultra violet stabilized polypropylene, each with two integral pivot studs on the back surface. Clips available for 7/32" glass or 11/16" wood or vinyl.

c. All blade pivot studs provide a polypropylene plastic to aluminum contact, eliminating the possibility of electrolytic corrosion.

d. Operating lever to be of heavy duty type, 6061-T6 aluminum 1/8" thick, and be self locking "over center" travel type. Lever pivot stud to be of stainless with stainless steel "E" clip retaining rings.

e. Operating levers to have eye cutouts lined with an injection molded smooth insert to facilitate hand or pole operation. No more than 10, 4" slats or 7, 6" slats shall be operated by one lever.

f. Hardware to be mounted against inside of vinyl frame heights,located near inside edge against raised vinyl shoulder, and fastened with 300 series stainless steel screws. Primary windloads absorbed by vinyl shoulder.

g. Hardware designed to accept glass, wood or PVC slats. Glass slats shall comply with UBC Section 5405 with exposed edges ground smooth.

4. Glazing: Glass shall comply with appropriate sections of the International Building Code. Exposed glass edges shall be ground smooth.

5. Screens:

a. Exterior flush mounted screen.

1) Exterior screens shall be removable from the exterior utilizing pivot clips holding screen in place.

b. Interior flush mounted screen.

1) Interior screens shall be removable from the exterior utilizing pivot clips holding screen in place.

c. Screen fabric shall be 18 x 16 or 18 x 14 fiber glass charcoal color, rolled in place using vinyl spline.

d. Frames over 4' high shall have a horizontal spacer bar of similar cross bar dividing screen into equal sections.

6. Security option – Glass:

a. Glass blades shall be tempered.

b. Glass blades available in 6" only.

c. Glass blades will have a .375" hole drilled through completely. The hole will be located in the center of the glass blade and .5625" from the glass edge.

d. The polypropylene blade holder will have a snap in, one time use, polypropylene security pin that will line up with the hole in the tempered glass blade, when in place. Once the blade is inserted into the blade holder, the security pin will be driven into the blade holder and pass through the hole in the glass blade as to not allow for blade removal. The presence of the security pin will not be accessible or visible from the exterior.

2.4 FABRICATION

A. Mullions and Transom Bars: Provide transom bars and mullions between multiple window units which meet the design pressure of 20 pounds per square foot (psf). Provide mullion covers on the interior and exterior to completely close exposed joints and recesses between window units and to present a neat appearance. Mullions and transom bars 48" and over must have galvanized steel reinforcement between mulls.

B. Combination Windows: Windows provided in combination shall be factory assembled. No combination window shall exceed 49 square feet without written approval from manufacturer.

C. Frames and Sash:

1. Provide steel reinforcement system within stiles to withstand design loading.

2. Provisions for Glazing: Design windows and rabbets suitable for glass thickness shown or specified. Design sash for outside glazing and for securing glass with glazing strips.

D. Hardware: As specified in window types.

E. Weatherstripping: Provide pile weatherstripping of poly-propylene, wool, or nylon pile with resin-impregnated backing fabric; comply with AAMA 701.2.

F. Screens:

1. Design screens to be rewirable, easily removable from inside the building, and to permit easy access to operating hardware.

2. Heavy duty, 5/16 x 3/4 x .025 thick rolled aluminum type frames will be used. Finish to be electrostatically applied paint.

3. Corners shall be square cut with plastic corner reinforcing inserts to prevent electrolytic action.

4. Spring clips shall be stainless steel.

PART 3 - EXECUTION

3.1 INSTALLATION

A. Install in accordance with the window manufacturer's printed instructions and details. Build in windows as work progresses or install without forcing into prepared openings. Set windows at proper elevation, location, and reveal; plumb, square, level, and in alignment; and brace, strut, and stay properly to prevent distortion and misalignment. Bed screws or bolts in sill members, joints at mullions, contracts of windows with sills, built-in fins, in mastic sealant of a type recommended by the window manufacturer. Install windows in a manner that will prevent entrance of water and wind. Fasten insect screens securely in place.

B. Anchors and Fastenings: Secure units to each other and other adjoining construction with clips, fins, screws, or other devices recommended by the window manufacturer.

3.2 ADJUSTING

During installation of windows adjust ventilators and hardware to operate smoothly and to provide weathertight sealing when ventilators are closed and locked. After installation, lubricate hardware and operating parts as necessary.

3.3 CLEANING

Clean interior and exterior surfaces of window units of paint spattering spots, and other foreign matter to present a neat appearance, to prevent fouling of weathering surfaces and weatherstripping, and to prevent interference with operation of hardware. Replace stained, discolored, or abraded windows that cannot be restored to their original condition with new windows. Clean all weep holes.

3.4 PROTECTION

Protect ventilators and operating parts against accumulation of dirt and building material by keeping ventilators tightly closed and locked to frame.

END OF SECTION

DIVISION 9 – FINISHES

SECTION 09900

PAINTS AND COATINGS

PART 1 - GENERAL

1.1 DESCRIPTION

A. It is the intention and scope of these specifications to require the painting and finishing of all indicated surfaces to the nearest obvious joint or transition point of the project, excepting only finished materials such as glass, screens, plated metal, copper and those surfaces hereinafter specified not to be painted. All damaged/marred surfaces shall be painted whether or not such work is fully described in these specifications.

B. Where the finish for any surface is not specified, it shall be painted similar to work in other parts of the project or similar to adjacent work.

C. Paint all new electrical conduits exposed on walls/ceilings. Color to match adjacent surfaces. Where no finish is used (in hidden areas) no painting will be required. Supporting brackets (uni-strut) for any electrical light fixtures or similar items which are not of chrome or nickel-plated materials shall be painted.

D. The Contractor shall read all other trade specifications so that he knows what others will provide and what he is expected to provide. All coats of paint as specified herein are in addition to the shop coat.

E. Sealants, where required, shall be installed in accordance with Section 07920.

F. All scaffolds of every type, beyond those included under other headings shall be furnished, installed, and maintained of a type and kind that meets all safety regulations of the State of Hawaii.

1.2 RELATED WORK

A. Section 07920 - Sealants and Caulking.

1.3 QUALIFICATIONS OF PAINTERS

A. Use only qualified journeyman painters for the mixing and application of paint.

1.4 COLORS

A. Contractor shall provide paint color(s) sample(s) to Engineer prior to start of painting work, if directed by the Engineer.

1.5 SUBMITTALS

A. Materials: Prior to all work of this Section, submit to the Engineer a complete list of all paint materials proposed to be used and the manufacturer's recommendations for application of each material including preparation of existing surfaces. The manufacturer's recommendations, when approved by the Engineer, shall form the basis for acceptance or rejection of application and preparation methods used on the project. This submittal shall in no way be construed as permitting the substitution of items for the specific items described in these Specifications.

1.6 SAMPLES

A. Paint: Submit three 8"x5" color/finish "brush-outs" of each color and finish to be used, if directed by the Engineer.

1.7 PRODUCT HANDLING

A. Deliver all paint materials to the job site in their original unopened containers with all labels intact and legible at time of use. Store only the approved materials at the job site and store in a suitable and designated location restricted to the storage of paint materials and related equipment. Coatings and paints shall not be thinned.

1.8 PROTECTION

A. Take all means necessary to ensure the safe storage and use of paint materials and the prompt and safe disposal of waste.

B. Take all means necessary to protect paint materials before, during, and after installation and to protect the installed work of other trades. In the event of damage, immediately make all repairs and replacements necessary to the approval of, and at no additional cost to the State.

1.9 ENVIRONMENTAL CONDITIONS

A. Take special care to comply with the manufacturer's recommendations as to environmental conditions under which the coatings and coating systems may be applied. Do not apply paint in areas where dust is being generated. Do not apply exterior paint during periods of high winds.

1.10 EXTRA STOCK

A. Provide one gallon container of each paint color clearly labeled with color and use. Leave paint with State for future use.

PART 2 - PRODUCTS

2.1 PAINT MATERIALS

A. All paint materials selected for coating systems for each type of surface shall be the product of a single manufacturer. Paint materials listed herein, unless otherwise designated are Devoe Paints and require no further approval as to manufacturer or catalog number. Other acceptable manufacturers include Ace Paints, Cabot's, Carboline, Decratrend, Dutch Boy,

Dupont, Fine Line Paint Corp., Fuller O'Brien, ICI, Martin Senour, Benjamin Moore, Olympic Stain, Pervo, Pittsburgh, Porter Intl., Pratt-Lambert, Rust-Oleum, Sinclair, Sherwin-Williams, Spectra-Tone, Smiland (Styletone), Thoro Systems, Tnemec, United Paint and Coatings. Other manufacturers of equal quality may be substituted if approved by the Engineer. The burden of proof of equality shall be borne by the Contractor.

B. All paint materials and equipment shall be compatible in use. Finish coats shall be compatible with prime coats. Prime coats shall be compatible with the surface to be coated. Tools and equipment shall be compatible with the coating being spread. Thinners, when used, shall be only those recommended by the manufacturer of the material thinned.

C. Materials list:

1. Exterior paint treatments on new surfaces:

a. Galvanized Metal:

Pretreatment: Solvent clean per SSPC-SP1 with mineral spirits

1st coat:	Galvanized Metal Primer #13201
2nd & 3rd coats:	17XX Wonder-Shield Semi-Gloss Exterior Acrylic Latex Paint

b. Ferrous Metals:

1st coat:	13101 Mirrolac Rust Penetrating Primer
2nd & 3rd coats:	17XX Wonder-Shield Semi-Gloss Exterior Acrylic Latex Paint

c. Wood Products:

Prime coat:	169 Latex Primer 2.1 mils DFT @ 425 sf/gal.
2nd & 3rd coats:	185 Super Spec Low Lustre Latex House Paint 1.0 mils DFT @ 475 sf/gal./coat

d. Wood (Stain):

1st & 2nd coats:	089 Moorwood Vinyl Acrylic Latex Stain 150-300 sf/gal.

PART 3 - EXECUTION

3.1 SURFACE CONDITIONS

A. Prior to starting any work under this Section, carefully examine all surfaces scheduled to receive paint for conditions which might adversely affect execution, permanence, or quality of the finish and which cannot be put into acceptable condition through the preparatory work described below. Do not proceed with surface preparation or coating application until conditions are suitable.

3.2 PREPARATION OF SURFACES, GENERAL

A. Prior to surface preparation and painting operations, mask, remove, or otherwise adequately protect all hardware, accessories, machined surfaces, plates, lighting fixtures, and similar items in contact with painted surfaces but not scheduled to receive paint.

B. Spot prime exposed nails and other metals which are to be painted with emulsion paint, using a primer recommended by the manufacturer of the coating system.

C. Before applying paint or other surface treatment, thoroughly clean all surfaces involved. Schedule all cleaning and painting so that dust and other contaminants from the cleaning process will not fall on wet, newly painted surfaces.

3.3 PREPARATION OF WOOD SURFACES

A. Prior to prime coat, apply mildewcide compound acceptable to Engineer. Apply in accordance to manufacturer's instructions.

B. Unless specifically noted to be left rough, smooth all finish wood surfaces exposed to view by using sandpaper.

C. Back-prime wood trim with one coat clear sealer. Sealant or caulking shall be applied only after paint coat is dry.

D. Nail holes shall be carefully filled with wood filler.

E. On small, dry, seasoned knots, thoroughly scrape and clean the surface and apply one coat of good quality knot sealer before application of priming coat. On large, open, unseasoned knots, scrape off all pitch and thoroughly clean the area, followed by an application of one coat of good quality knot sealer. Remove and treat all pitch surfaces in the same manner.

F. Unless specifically otherwise approved by the Engineer, do not proceed with painting of wood surfaces until the moisture content of the wood is 12% or less as measured by a moisture meter.

3.4 PREPARATION OF FERROUS SURFACES

A. Clean all surfaces until they are completely free from dirt, loose paint, oil, and grease. After cleaning, apply one coat of the specified primer the same day to all ferrous surfaces scheduled to be painted.

3.5 PREPARATION OF GALVANIZED SURFACES

A. Clean all surfaces thoroughly with solvent until they are completely free from loose paint, dirt, oil, and grease.

3.6 PAINT APPLICATION

A. Contractor shall apply all paint materials in accordance with manufacturer's specifications.

B. All paint shall be brush applied unless spray or roller application is specifically called for in specifications.

C. All coats shall be applied under dust free conditions at not less than the minimum coverage rate specified by the manufacturer. Paintings and coatings shall not be thinned. Minimum total dry film thickness of all coats shall be 5 mils.

D. Wood surfaces shall be sanded smooth prior to application of first coat and between coats as necessary to produce smooth surfaces.

E. All hidden wood surfaces shall be sealed prior to installation with a clear penetrating sealer.

F. Factory prime coats shall be restored where necessary due to damage during shipment and handling prior to application of finish coats. Surfaces to which coatings are applied must be completely dry.

G. All hardware shall be fitted and removed before painting and re-applied after painting. Surface hardware shall be applied after painting. Finish hardware is not to be painted and shall be cleaned and left free of any paint spots or discolorations.

H. Leave all finished surfaces free from runs, drips, waves, ridges, laps, brush marks, and aberrations in color, texture, and finish. Apply the paint in such a manner as to produce a film of uniform thickness with complete hiding. Take special care to ensure that all surfaces including edges, corners, crevices, welds, and other items receive a film thickness equal to that of adjacent surfaces.

I. Allow sufficient drying time between coats. Modify the period as recommended by the material manufacturer to suit adverse weather conditions. Oil-base and oleo-resinous solvent-type paints shall be considered dry for recoating when the paint feels firm, does not deform or feel sticky under moderate pressure of the thumb, and the application of another coat of paint does not cause lifting or loss of adhesion of the undercoat.

J. Use a moisture meter to test surfaces and do not apply the initial coating until moisture meter reading is within the limits recommended by the paint materials manufacturer.

K. Sand and dust between coats to remove all defects visible to the unaided eye from a distance of 5 feet.

L. Vary the color of succeeding coats so that the number of coats can be determined by visual examination.

3.7 REINSTALLATION OF REMOVED ITEMS

A. Following completion of painting each area, reinstall all items removed for painting. Use only workmen skilled in the particular trade involved.

3.8 CLEANING UP

A. During progress of the Work, do not allow the accumulation of empty containers or other excess items except in areas specifically set aside for that purpose. Prevent accidental spilling of paint materials and, in the event of such spill, immediately remove all spilled material and the waste or other such equipment used to mop up the spill, and wash the surfaces to their original undamaged condition, all at no additional cost to the State.

END OF SECTION

SECTION 13281

REMOVAL AND DISPOSAL OF ASBESTOS CONTAINING MATERIAL

PART 1-GENERAL

1.1 SECTION INCLUDES

A. Removal and Disposal of asbestos containing material

B. Worker Protection

C. Decontamination System

D. Water Filter System

E. Negative Pressure System

F. Work Area Preparation

G. Asbestos work area clearance

H. Air sampling requirements

1.2 RELATED SECTIONS

Section 01715 - Existing Conditions for the results of the State's survey for materials.

1.3 COORDINATION

Coordinate all of removal of asbestos containing material with the State's authorized representative.

1.4 DESCRIPTION OF WORK

A. In performing this project, all possible safeguards, precautions and protective measures shall be utilized to prevent exposure of any individual to asbestos particulates.

B. Furnish all labor, materials, and equipment necessary to carry out the safe removal and disposal of ACM in compliance with all applicable Federal, State and Local laws and regulations from all areas as identified in the *Limited Hazardous Materials Survey Report, Heeia State Park, Banquet Hall Improvements, Kaneohe, Oahu, Hawaii, Job No. 5-OP-28,* prepared by EnviroServices & Training Center, LLC. The asbestos abatement work shall include, but may not be not limited to:

1. Removal and disposal of approximately 2 square feet of asbestos containing, non-friable grey sealant material located on the corrugated roof panels.
2. The Contractor is responsible for conducting his own site visit to verify all quantities and material locations. There will be no change orders issued for the abatement of additional ACM discovered in the course of the abatement activities.

C. Cleaning shall include the pre-cleaning, wet wiping and HEPA vacuuming of surfaces within the room where abatement will take place.

D. The asbestos abatement work shall include removal of all ACM within the work area as specified herein.

E. Contractor shall comply with all Federal, State and local regulations pertaining to asbestos removal. If there is a conflict with the Specifications, the more stringent requirement shall apply.

F. In general, the principal items of the asbestos removal work shall be as follows:
1. Worker protection
2. Decontamination system
3. Preparation of work area
4. Removal and disposal of ACM
3. Removal of protective sheeting

G. The Contractor shall examine and have at all times in his possession at his office (one copy) and in view at each job site office (one copy) the following materials:
1. Hawaii Administrative Rules, Title 11, Chapters 501, 502, 503 and 504;
2. Title 29 Code of Federal Regulations Part 1926.62; Safety and Health Standards;
3. Title 29 Code of Federal Regulations Part 1910.134; Respiratory Protection;
4. Title 40 Code of Federal Regulations Part 261; Identification and Listing of Hazardous Waste;
5. Title 40 Code of Federal Regulations Part 262; Standards Applicable to Generators of Hazardous Waste;
4. Title 40 Code of Federal Regulations Part 263; Hazardous Waste Transporters;
5. Copies of any other applicable Federal, State and local regulations, standards, documents and codes;

6. Documentation of the adequacy of compressed air systems and respiratory protection system including a list of compatible components and specifications of the types and maximum number of respirators that may be used with the system;
7. Copies of the procedures for the use of the decontamination enclosure system or any other procedures which have been established to prevent contamination or areas outside the work area;
8. Copies of procedures to be followed during medical emergencies, including phone numbers of the nearest hospital or other emergency facility, which shall be posted by the nearest telephone;
9. Copies of the Contractor's Respiratory Protection Program, Hazardous Communication Program, Safety Program, Asbestos Abatement Plan and Work Procedure, and Waste Management Plan;
10. Copies of Material Safety Data Sheets for all chemicals used;
11. Copies of all relevant certificates held by abatement workers and abatement contractors/supervisors actively engaged in the abatement project;
12. Certification of the project designer who wrote procedures for the job;
13. Copies of bulk sampling results, including inspector and laboratory names of all suspect material to be disturbed that is not assumed to be asbestos-containing; and
14. Records of all air sampling as required in HIOSH section 12-145-5.

H. The Contractor shall comply with the above requirements and all applicable Federal, State and local regulations. Where there is any conflict or inconsistency among requirements, the more stringent requirement shall apply. Ignorance of the above requirements and any applicable State and City & County Regulation resulting in additional cost to the Contractor shall not be reimbursable or billable to the State.

I. All regulations shall govern over these Specifications, except when the Specification is providing greater protection against asbestos exposure, injury, loss or liability. Any question regarding conflict or inconsistency between Specification and/or regulations should be directed to the State's authorized representative.

J. Whenever approval of the State's authorized representative is required prior to proceeding with other work, the Contractor shall comply with the following:
1. The Contractor shall give, at a minimum; five (5) days notification to the State's authorized representative prior to the start of any asbestos work.
2. The Contractor shall not begin any work without the State's authorized representative present onsite.
3. The Contractor shall allow the State's authorized representative 24 hours from notification to respond to the request for site inspection(s).
4. The Contractor shall designate one person (either a foreman or superintendent) who will be authorized to request inspections. The name of the designated person shall

be submitted in writing to the State's authorized representative prior to commencing work. Requests from any other person will not be considered official requests.

5. The designated person requesting an inspection shall provide the following information:
   a. Name of caller.
   b. Building and rooms to be inspected.
   c. Work phase of inspection, as specified.

1.5 REFERENCES

A. The publications listed below form a part of this Specification to the extent referenced. The publications are referred to in the text by the basic designation only, and include but are not limited to, the following.

B. CODE OF FEDERAL REGULATIONS (CFR)

29 CFR 1926.103	Respiratory Protection
29 CFR 1926.51	Sanitation
29 CFR 1926.200	Accident Prevention Signs and Tags
29 CFR 1926.59	Hazard Communication
29 CFR 1926.1101	Asbestos, Tremolite, Anthophyllite, Actinolite
29 CFR 1910. 134	Respiratory Protection
40 CFR 61-SUBPART A	General Provisions
40 CFR 61-SUBPART M	National Emission Standard for Asbestos
40 CFR 763	Asbestos Containing Material in Schools
49 CFR 172	Hazardous Materials, Tables, and Hazardous Materials Communications Regulations
49 CFR 178	Shipping Container Specification

C. ENVIRONMENTAL PROTECTION AGENCY (EPA)

EPA 560/5-85-024	Guidance for Controlling ACM in Buildings

D. HAWAII OCCUPATIONAL SAFETY AND HEALTH (HIOSH)

12-114.2	Personal Protective Equipment
12-121.2	Fall Protection
12-122.2	Materials Handling, Storage, Use, and Disposal
12-145.1	Asbestos
12-151	Hazardous Waste Operations and Emergency Response
12-206-13	Asbestos

E. AMERICAN NATIONAL STANDARDS INSTITUTE (ANSI)

ANSI Z9.2	(1979; R 1991)Fundamentals Governing the Design and Operation of Local Exhaust Systems
ANSI Z88.2	(1992) Respiratory Protection

F. AMERICAN SOCIETY FOR TESTING AND MATERIALS (ASTM)

ASTM C 732	(1995) Aging Effects of Artificial Weathering on Latex Sealants
ASTM D 532	(1993;Rev. A) Mandrel Bend Test of Attached Organic Coatings
ASTM D 1331	(1989; R 1995) Surface and Interfacial Tension of Solutions of Surface-Active Agents
ASTM D 2794	(1993) Resistance of Organic Coatings to the Effects of Rapid Deformation (Impact)
ASTM E 84	(1995;Rev. B) Surface Burning Characteristics of Building Materials
ASTM E 96	(1995) Water Vapor Transmission of Materials
ASTM E 119	(1995; Rev. A) Fire Tests of Building Construction and Materials
ASTM E 736	(1992) Cohesion/Adhesion of Sprayed Fire-Resistive Materials Applied to Structural Members
ASTM E 1368	(1990) Visual Inspection of Asbestos Abatement Projects
ASTM E 1494	(1992) Encapsulants for Spray- or Trowel-Applied Friable Asbestos-Containing Building Materials

G. UNDERWRITERS LABORATORIES INC. (UL)

UL 586	(1990) High-Efficiency, Particulate, Air Filter Units

1.6 DEFINITIONS

A. Abatement: Procedure to control fiber release from asbestos containing material.

1. Removal: Shall adhere to all specified procedures herein and shall include the proper removal and disposal of asbestos containing material as per all applicable Federal, State and local rules, regulations, and industry standards.

2. Post-Removal Surface Encapsulation: Procedures necessary to coat surfaces from which ACM have been removed to control any residual fiber release.

B. Amended Water: Water containing a wetting agent or surfactant with a maximum surface tension of 2.9 Pa (29 dynes per square centimeter) when tested in accordance with ASTM D 1331.

C. Area Sampling: Sampling of asbestos fiber concentrations which approximates the concentrations of asbestos in the theoretical breathing zone but is not actually collected in the breathing zone of an employee.

D. Asbestos: The term asbestos includes chrysotile, amosite, crocidolite, tremolite asbestos, anthophyllite asbestos, and actinolite asbestos and any of these minerals that has been chemically treated or altered.

E. Asbestos Containing Material (ACM): Materials that contain one percent asbestos or more as determined by Polarized Light Microscopy or Transmission Electron Microscopy.

F. Asbestos Control Area: That area where asbestos removal operations are performed which is isolated by physical boundaries which assist in the prevention of the uncontrolled release of asbestos dust, fibers, or debris.

G. Asbestos Fibers: Those fibers having an aspect ratio of at least 3:1 and longer than 5 micrometers as determined by NIOSH Method 7400.

H. Asbestos Permissible Exposure Limit (PEL): 0.1 fibers per cubic centimeter of air as an 8-hour time weighted average measured in the breathing zone as defined by 29 CFR 1926.1101 or other Federal legislation having legal jurisdiction for the protection of workers health. If an employee is exposed to asbestos particulates for more or less that 8 hours in a work day, the PEL shall be determined by the following formula:

PEL (micrograms per cubic meter of air) = 0.8 fibers per cubic centimeter of air/# hours worked per day

I. Background: The ambient airborne asbestos concentration in an uncontaminated area as measured prior to any asbestos hazard abatement efforts. Background concentrations for other (contaminated) areas are measured in similar but asbestos free locations.

J. Certified Clean: Certification that a work area has no visible signs of fibrous materials or other contamination, and does not have levels of airborne fibers above the defined air clearance criteria.

K. Competent Person: As used in this section, refers to a person employed by the Contractor who is trained in the recognition and control of lead hazards in accordance with current federal, State, and local regulations and has the authority to take prompt corrective actions to control the asbestos hazards.

L. Contractor: The Contractor is that individual, or entity engaged under contract to the State or General Contractor to remove, encapsulate and/or dispose of ACM.

M. Decontamination Facility (DF) or Area: A series of connected rooms or spaces including Clean, Shower, and Contaminated Equipment Areas, each separated by an airlock and used for both the decontamination of all workers, equipment and their personal protective equipment upon departing an asbestos removal work area, and for access to such work areas.

N. EPA: U.S. Environmental Protection Agency

O. Fixed Object: A unit of equipment or furniture in the work area which cannot be removed from the work area without dismantling.

P. Friable Asbestos Material: ACM that can be crumbled, pulverized, or reduced to powder by hand pressure when dry.

Q. Facility: The former Qantas Air Lounge and associated mechanical room located at the Ewa Concourse Gate 26, Honolulu International Airport.

R. High Efficiency Particulate Air (HEPA) Filter Equipment: HEPA filtered vacuum and/or exhaust ventilation equipment with a filter system capable of collecting and retaining asbestos fibers. Filters shall retain 99.97 percent of particles 0.3 microns or larger as indicated in UL 586.

S. HIOSH: Division of Occupational Safety and Health, Department of Labor and Industrial Relations, State of Hawaii.

T. Monitoring Specialist: The monitoring specialist enters the work area to set up air monitoring devices and then collects the various air samples to be sent to the laboratory for analysis. The monitoring specialist has working experience in the asbestos abatement industry and a working knowledge of all applicable State and Federal occupational safety and health regulations and formal training in occupational safety and health. The Monitoring Specialist shall have currently attended and passed the AHERA Project Monitor course as specified in Hawaii Administrative Rules, Chapter 11, 504. This course shall be approved by a State of Hawaii Accreditation Program. The Monitoring Specialist shall also have demonstrable experience in asbestos air monitoring techniques and respiratory protection.

U. NESHAP: National Emission Standards for Hazardous Air Pollutants

V. NIOSH: National Institute for Occupational Safety and Health

W. Non-Friable ACM: ACM in which the asbestos fibers have been immobilized by a bonding agent, coating, binder, or other material so that the asbestos is well bound and will not normally release asbestos fibers during any appropriate use, handling, storage or transportation. It is understood that Non-Friable ACM may release asbestos fibers under other conditions such as demolition, removal, or mishap.

X. OSHA: Occupational Safety and Health Administration

Y. State: The City and County of Honolulu.

Z. State's Authorized Representative: the person or persons designated by the State to act on its behalf.

AA. Personal Sampling: Air sampling which is performed to determine asbestos fiber concentrations within the breathing zone of a specific employee, as performed in accordance with 29 CFR 1926.1101.

BB. Post-Removal Encapsulant: A liquid material applied to surfaces from which ACM has been removed, to control the possible release of residual fibers, either by creating a membrane over the surface (bridging encapsulant) or by penetrating into the material and binding its components (penetrating encapsulant).

CC. Surfactant: A chemical wetting agent added to water to improve penetration, thus reducing the quantity of water required for a given operation or area.

DD. State: The State of Hawaii

EE. Wetting Agent: A chemical added to water to reduce the water's surface tension thereby increasing the water's ability to soak into the material to which it is applied.

1.7 AUTHORITY TO STOP WORK

A. The State's authorized representative has the authority to stop the abatement work at any time they determine that conditions are not within the drawing/specification requirements and applicable regulations. The work stoppage shall continue until corrective steps have been taken and a specified condition restored to the satisfaction of the State's authorized representative. Standby time required to resolve violations shall be at the Contractor's expense. Stop Work Orders may be issued for, but shall not be limited to the following:

1. Excessive airborne fibers inside (>0.5 f/cc) and/or outside (>0.01 f/cc) the work area.
2. Visible emissions of dust or debris going beyond the work area boundaries.

1.8 SUBMITTALS

A. Detailed Schedule: Submit the actual start date and completion dates for the each phase of the asbestos removal.

B. Notices: As regulated by each agency and before commencement of any on-site project activity send written notice of the proposed asbestos abatement work as early as possible

but at least 10 working days prior to commencement of work in accordance with 40 CFR Part 61.145 of SUBPART M. Send notice with copies to the State's authorized representative and to the following agencies:

1. The Administrator of the Environmental Protection Agency (EPA) Regional 9 who has the jurisdiction over the project.
2. State of Hawaii, Department of Health, "Notification of Demolition and Renovation" form. Send to: Noise, Radiation and Indoor Air Quality Branch, Asbestos Abatement Office, State of Hawaii, 591 Ala Moana Blvd., Honolulu, Hawaii 96813.

C. Permits and Licenses: Submit copies of all permits, licenses and arrangement for removal, transportation and disposal of ACM no later than 20 consecutive working days from notice of award unless otherwise instructed in writing by the State's authorized representative.

D. Landfill Approval: Submit written evidence that the landfill for disposal is approved for asbestos disposal by the EPA and Hawaii regulatory agency(s).

E. Manufacturer's Data: Submit copies of manufacturer's specifications, installation instructions and field test materials for all equipment related to asbestos handling and abatement, including any other data that may be required to demonstrate compliance with these Specifications and proposed uses.

F. Samples: Submit samples of the following items for approval prior to ordering materials:

1. Asbestos encapsulant(s): Copies of manufacturer's literature including all laboratory data, MSDS, and application instructions.
3. Plastic sheeting: Three 8-1/2 by 11-inch pieces of each thickness and type with labels indicating actual mil thickness.
4. Surfactant: Copies of manufacturer's literature including all laboratory data, MSDS, and mixing and application instructions.
5. Tapes and adhesives: Copies of manufacturer's literature including all laboratory data.
6. Warning labels and signs.
7. Protective clothing: Copies of manufacturer's literature on all protective clothing and one sample of each item. Samples submitted will be returned to the Contractor.
8. Respiratory equipment: Copies of manufacturer's literature on all respiratory equipment and one sample of each item along with a description of where and how each item will be used. Samples submitted will be returned to the Contractor.

G. Shop Drawings: Submit no later than 10 consecutive working days from award notice, copies of shop drawings for the following items as a minimum:

1. Description of any equipment to be employed not discussed in this Section.
2. Security provisions, if any, in and around the project area.
3. Outline of work procedures to be employed.
4. Location and construction of all airtight barriers.
5. Staging of the work.
6. Entrances and exits to the work place.
7. Location and construction of worker and equipment decontamination units.
8. Type of respiratory protection to be used.
9. Water filtration system for all contaminated water.
10. Existence and location of negative air exhaust ports and containment.

H. Asbestos Abatement Plan: Contractor shall develop, submit for approval to the State's authorized representative no later than 15 consecutive days from notice of award, and implement a work procedure for abatement work describing work practices and engineering controls to be used to prevent emissions of asbestos from the work site, ensure maximum site safety and safeguard the public, workers and the environment from asbestos exposure. The Asbestos Abatement Plan will be a detailed plan of the safety precautions such as lockout-tagout, fall protection, and equipment, and work procedures to be used in the removal of ACM. The plan shall be prepared, signed, and sealed by the State of Hawaii Accredited Project Designer. Such plan shall include but not be limited to the precise personal protective equipment protection, the location of asbestos control areas including clean and dirty areas, buffer zones, showers, storage areas, change rooms, removal method, interface of trades involved in the construction, sequencing of asbestos related work, disposal plan, type of wetting agent and asbestos sealer to be used, locations of local exhaust equipment, and a detailed description of the method to be employed in order to control environmental pollution. This plan must be approved in writing prior to starting any asbestos work. The Contractor and the State's authorized representative shall meet prior to the start of work to discuss in detail the standard operating procedures. Once approved by the State's authorized representative, the plan will be enforced as if an addition to the Specification.

I. Documentation of Training: Submit no later than 10 consecutive working days from notice of award, documentation that each and every individual, including foreman, supervisors, other company personnel or agents, and any other individual who may be exposed to airborne asbestos fibers and who may be responsible for any aspects of abatement activities which may occur, has currently attended and passed the AHERA Abatement Worker and/or AHERA Abatement Contractor/Supervisor course, whichever is relevant to that workers responsibilities, as specified in 40 CFR Part 763, "Asbestos Materials in Schools". These courses shall be EPA-approved or approved by a State

Accreditation Program in the most current listing of the Federal Register. No worker shall be allowed on site if they are found to have either an expired accreditation certificate or do not comply with the requirements set forth in 40 CFR Part 763 on training. The Contractor shall be responsible for keeping the documentation up to date and submitting subsequent documentation to the State's authorized representative before any additional employee or individual, not currently on the list, is allowed within the project site.

J. Documentation of Instructions: Submit no later than 10 consecutive working days from notice of award, documentation that all personnel or agents who may be exposed to airborne asbestos fibers and who may be responsible for any aspects of abatement activities which may occur have had instructions on the nature of the activities and operations which create a risk of asbestos exposure and the necessary protective steps, on use and fitting of respirators in accordance with qualitative procedures as detailed in HIOSH 12-145 Appendix C, Qualitative and Quantitative Fit Testing.

K. Monitoring Specialist Qualifications: The Contractor shall submit no later than 10 consecutive working days from notice of award the Contractor's monitoring specialist's name, contact information, valid qualifications, and current certification of completion of the AHERA Contractor/Supervisor or Project Monitor course as specified in 40 CFR Part 763.SUBPART E "Asbestos Model Accreditation Plan for States".

L. Documentation From Physician: Submit no later than 10 consecutive working days from notice of award, documentation from a licensed medical doctor that all employees or agents who may be required to wear a respirator have been provided with an opportunity to be medically monitored to determine whether they are physically capable of working while wearing the required respirator without suffering adverse health effects. In addition, document that all individuals permitted within the project site have received medical monitoring or had such monitoring made available to them as required in HIOSH 12-145.1. The Contractor must be aware of and provide information to the examining physician about unusual conditions in the work place environment (e.g. high temperatures, humidity, chemical contaminants) that may impact the employee's ability to perform work activities. The Contractor shall keep and make available to all affected individuals a record and the results of such examinations.

M. Medical Surveillance Program: Submit no later than 10 consecutive days from notice of award, all medical examinations for employees to be used on this project and a copy of the Contractor's medical surveillance program prepared in accordance with all applicable Federal, State and local laws.

N. Respiratory Protection Program: Submit no later than 10 consecutive working days from notice of award, a copy of the Contractor's Respiratory Protection Program prepared in accordance with all applicable laws. The Contractor shall also submit fit test records on all employees to be used on this project who may be required to wear a respirator.

O. Hazard Communication Program: Submit no later than 10 consecutive working days from notice of award, a copy of the Contractor's Hazard Communication Program prepared in accordance with all applicable laws.

P. Safety Program: Submit no later than 10 consecutive working days from notice of award, a copy of the Contractor's Health and Safety Plan prepared in accordance with all applicable laws.

Q. Emergency Planning and Procedures: Contractor shall submit an emergency plan prior to abatement initiation for review and acceptance by the State's authorized representative.

1. Emergency procedures shall be in written form and prominently posted adjacent to the Health and Safety Plan. Prior to entering the work area, everyone must read and sign these procedures to acknowledge receipt of emergency exits and emergency procedures.

2. Emergency planning shall include notification of police, fire, and emergency medical personnel of the work schedule of the planned abatement activities, and of the layout of the work area, particularly any barriers that may affect response capabilities.

3. Emergency planning shall include considerations of fire, explosion, toxic atmosphere, electrical hazards, slips, trips and falls, confined spaces, and heat related injury. Written procedures shall be developed and employee training procedures shall be provided in the Contractor's plan.

R. Testing Laboratory: The Contractor shall submit no later than 10 consecutive working days from notice of award the name, address and telephone number of the testing laboratory responsible for analysis and report of airborne fiber concentration for compliance with HIOSH 12-145, along with evidence that the air monitoring testing laboratory is a successful participant in the American Industrial Hygiene Association's (AIHA) Proficiency Analytical Testing (PAT) program for phase contrast microscopy (PCM).

S. HEPA Vacuums: Submit no later no later than 10 consecutive working days from notice of award, manufacturer's certification that vacuums conform to ANSI Z9.2-79, Fundamentals Governing the Design and Operation of Local Exhaust Systems as applicable to this project.

T. Rental Equipment: When rental equipment is to be used in abatement areas or to transport asbestos contaminated waste, a written notification concerning intended use of the rental equipment must be provided to the rental agency with a copy submitted to the State's authorized representative.

U. Visitor/Worker Entry Log: Maintain a log of all personnel including the Contractor's employees and agents who enter the work area while asbestos abatement operations are in progress, until final clearance is passed. The log shall contain the following

information as a minimum and certified copies shall be submitted to the State's authorized representative weekly:

1. Date of visit.
2. Visitor's name, employer, business address, and telephone number.
3. Time of entry and exit from work area.
4. Purpose of visit.
5. Type of protective clothing and respirator worn.
6. Certificate of release signed and filed with the Contractor.

V. Field Test Reports

1. Employee Exposure Sampling Results: Submit test results to the State's authorized representative and the affected Contractor's employees within three (3) working days, signed by the testing laboratory employee performing the analysis.
2. Asbestos Disposal Quantity Report.

W. Waste Disposal Manifest Forms: Submit copies of all transport manifests, trip tickets and disposal receipts for all asbestos containing waste materials no later than 10 consecutive working days from the date the waste is removed from the work area during the abatement process.

1.9 DELIVERY AND STORAGE OF MATERIALS

A. Deliver materials to the site in original packaging, containers or bags fully identified with manufacturer's name, brand and lot number.

B. Store materials in a dry well-ventilated space, under cover, off the ground and away from surfaces subject to dampness or condensation as approved by the State's authorized representative.

C. Dispose of material that becomes contaminated with asbestos in accordance with applicable regulations.

D. Store replacement materials outside the contaminated work area until abatement is completed.

1.10 PROTECTION

A. Site Security:

1. The work area is to be restricted only to authorized, trained, and protected personnel. These may include the Contractor's employees; the State's authorized

representative, State and local inspectors and any other designated individuals. A list of authorized personnel shall be established prior to job start.

2. Entry to the work area by unauthorized individuals shall not be permitted without the express approval of the State's authorized representative and any such entry shall be reported immediately to the State's authorized representative by the Contractor.

3. A Visitor/Worker Entry Log shall be maintained.

4. The Contractor shall have control, subject to approval of the State's authorized representative, of security in the work area and in proximity of Contractor's equipment and materials.

B. Site Protection and Safety: As a minimum, follow the requirements of all applicable Federal, State and local regulations. Take all necessary precaution to ensure there is no asbestos contamination to those areas not included in the work schedule.

C. Protective Covering: The Contractor shall provide and install protective covering as required or upon request by the State's authorized representative. Protective covering shall be unused plastic sheets.

D. Safeguarding of Property: The Contractor shall take whatever steps necessary to safeguard his work area, any property of the State, and all other individuals in the vicinity of his work area during the execution of this Contract. The Contractor shall be responsible for and shall compensate to the injured party's satisfaction any and all damages resulting from their employee's negligence.

PART 2-PRODUCTS

2.1 MATERIALS

A. Asbestos Prohibition: No asbestos containing materials or equipment shall be used in this section. The Contractor shall ensure that all materials and equipment incorporated in the project are asbestos-free.

B. Plastic Sheeting: 6-millimeter-minimum-thickness polyethylene film.

C. 6-mil Plastic Bags: Transparent, 6-millimeter-minimum-thickness seamless bottomed polyethylene bags. All bags used to transport ACM must carry the DOT class 9 label, a space for generator information and the following warning:

DANGER CONTAINS ASBESTOS FIBERS
AVOID CREATING DUST
CANCER AND LUNG DISEASE HAZARD

D. Tape: Tape shall be capable of sealing joints of adjacent sheets of polyethylene, attaching polyethylene sheeting to finished or unfinished surfaces of dissimilar materials and adhering under both dry and wet conditions such as when amended water is used.

E. Adhesives: Adhesive shall be capable of sealing joints of adjacent sheets of polyethylene, attaching polyethylene sheeting to finished or unfinished surfaces of dissimilar materials and adhering under both dry and wet conditions such as when amended water is used.

F. Post-Removal Encapsulation: The encapsulant shall be capable of being applied to surfaces from which asbestos-containing material has been removed to control the possible release of residual fibers. The encapsulant shall be capable of either creating a membrane over the surface (i.e. a bridging encapsulant) or by penetrating into the material and binding its components (i.e. a penetrating encapsulant) and shall be compatible with the existing finishes.

G. Surfactant (Wetting Agent): 50 percent polyoxyethylene ester and 50 percent polyoxyethylene ether, or equivalent, and shall be mixed with water to provide a minimum concentration of one ounce of surfactant to five (5) gallons of water.

H. Warning Labels, Tape and Signs: As required by OSHA 29 CFR 1926.1101 and HIOSH regulation 12-145.1.

I. Protective Clothing: The Contractor shall have all the coveralls required for this project on site prior to the start of work.

J. Other Products: Provide all other materials including but not limited to, lumber, plywood, nails, fasteners, metal studs, hardware, sealants, and caulking which may be required to properly prepare and complete this project.

2.2 TOOLS AND EQUIPMENT

Provide sufficient and suitable tools for the asbestos abatement procedures, including but not limited to:

1. Water Sprayer: Airless or pressure sprayer for amended water application as applicable.
2. Paint/Encapsulant Sprayer: Airless type only.
3. HEPA vacuum.
4. Ladders or Scaffolds: All ladders and scaffolds shall be OSHA approved, and shall be of sufficient dimensions and quantities so that all work surfaces can be easily and safely accessed by the workers, the State's authorized representative and other inspectors. Scaffold joints and ends shall be sealed with tape to prevent migration of asbestos fibers.

5. Electrical Equipment: All electrical equipment shall be Underwriter's Laboratory listed and approved, and shall have ground fault circuit interrupter protection, installed by a licensed electrician.

6. Hand Power Tools: All hand power tools shall be equipped with HEPA–filtered local exhaust ventilation if used to drill, cut or otherwise disturbs ACM.

7. Other tools and equipment as necessary.

2.3 ELECTRICAL EQUIPMENT PROTECTION

A. Non-current carrying metal parts of Contractor's fixed, portable and plug-connected equipment shall be grounded. Portable tools and appliances protected by a UL approved system of double insulation need not be grounded. All light and power circuits in the asbestos removal area shall be protected by ground fault circuit interrupters.

B. Extension cords shall be the 3-wire type, protected from damage, and shall not be fastened with staples, hung from nails, or suspended with wires. Splices shall have soldered wire connections with insulation equal to the cable. Worn or frayed cords shall not be used.

C. As necessary, safe lighting equipment for each work area shall be provided by the use of wire guard protected floodlights. Temporary wiring shall be properly insulated and substantially supported. Circuits shall be properly designed and fused. All temporary lighting inside the asbestos removal area shall be weather-proofed.

2.4 PERSONAL PROTECTION REQUIREMENTS

A. The contractor acknowledges that he alone is responsible for instruction and for enforcement of personal protection requirements and that these specifications provide only a minimum acceptable standard.

B. Personal Protective Equipment (PPE)

1. Respirators: Provide personnel engaged in pre-cleaning, cleanup, handling, removal and demolition of asbestos materials with respiratory protection as indicated in 29 CFR 1926.1101, - 29 CFR 1926.103 and 29 CFR 1910.134. Respirators shall be worn at all times within the work area and any other areas where workers may be exposed to asbestos.

2. Outer protective clothing: Provide personnel exposed to asbestos with disposal "non-breathable," whole body outer protective clothing, head coverings, gloves, and foot coverings. Provide disposal plastic or rubber gloves to protect hands. Cloth gloves may be worn inside the plastic or rubber gloves for comfort, but shall not be used alone. Make sleeves secure at the wrists, make foot coverings secure at the ankles, and make clothing secure at the neck by the use of tape. Reusable whole body outer protective clothing shall not be used.

3. Additional safety equipment (e.g. hardhats meeting the requirements of ANSI Z89.11981, eye protection meeting the requirements of ANSI Z41.1-1967, disposable PVC gloves), as necessary, shall be provided to all workers.

PART 3-EXECUTION

1.1 DECONTAMINATION AREA

A. The decontamination area as outlined below shall be employed during removal work involving interior materials that do not extend to the exterior, where all work is performed from the interior and the work area is fully sealed off from the exterior.

B. General: The Contractor shall construct the decontamination area, acceptable to the Engineer's authorized representative, adjacent to the work area. The decontamination area shall consist of an area covered by an impermeable drop cloth on the floor or horizontal working surface. The area must be of sufficient size as to accommodate cleaning of equipment and removing personal protective equipment without spreading contamination beyond the area.

C. Access: In all cases, access between contaminated rooms or areas and clean rooms or areas shall be through the decontamination system.

D. Cleaning: Work clothing and personal protective equipment must be cleaned in the decontamination area with a HEPA vacuum prior to removal. All equipment and surfaces or containers filled with ACM must be cleaned in the decontamination area prior to removal.

E. Clean Area: The Contractor shall establish a clean area adjacent to the decontamination area with sufficient space for storage of any worker's and agent's street clothes, personal effects and other non-contaminated items.

1.2 DECONTAMINATION ENCLOSURE SYSTEM

A. The decontamination enclosure system as outlined below shall be employed during any abatement work involving indoor materials, including materials extending from the exterior to the interior such as window or vent sealant, except where openings to the interior are fully sealed and all work is performed from the exterior of the building.

B. General: The Contractor shall construct the decontamination enclosure system or use portable units acceptable to the Engineer's authorized representative that is connected to the work area with framed-in or accordion tunnels. The Contractor shall line all tunnels with 6-mil plastic and shall seal this lining with tape at all joints. All vertical surfaces subject to observation from the exterior, non-contaminated areas shall be constructed of opaque materials.

C. Access: In all cases, access between contaminated rooms or areas and the decontamination enclosure unit shall be through an airlock. In all cases, access between any two rooms/areas within the decontamination enclosure unit shall be through a curtained doorway.

D. Decontamination Unit: Provide personnel decontamination unit within the asbestos control area in an area approved by the Engineer's authorized representative. The Unit shall contain the following:

1. An Equipment Area with two doorways, one leading to the Work Area and another leading to the Shower Area

2. A Shower Area with two doorways, one leading to the Equipment Area and another leading to the Clean Area. An adequate supply of soap shall be maintained within this Shower Area. The Contractor must ensure that no leakage from the shower area occurs and that all wastewater shall be disposed of as contaminated or filtered through the wastewater filtering system.

3. A Clean Area with two doorways, one leading to the Shower Area and another leading to a non-contaminated area outside the asbestos work area. The Clean Area shall have sufficient space for storage of any worker's and agent's street clothes, personal effects and other non-contaminated items.

1.3 NEGATIVE PRESSURE SYSTEM

A. The negative pressure system outlined below shall be employed for all interior asbestos abatement work, including materials extending from the exterior to the interior such as window or vent sealant, except where openings to the interior are fully sealed and all work is performed from the exterior of the building.

B. Local Exhaust System: Provide a local exhaust system in the asbestos control area in accordance with ANSI Z9.2 and 29 CFR 1926.1101 that will provide at least six air changes per hour within the negative enclosure. Local exhaust equipment shall be operated continuously until the asbestos control area is removed and shall be leak proof. To lengthen the life of the HEPA filter, the local exhaust system shall be equipped with a 10 micron particle arrestance pre-filter, a 5 micron particle arrestance secondary filter placed ahead of the HEPA filter. Maintain a minimum pressure differential in the work area of (–) 0.08 inches of water gauge relative to the air pressure outside the work area. HEPA filters shall conform to ANSI Z9.2 and UL 586.

C. Location of Exhaust Units: Locate units to ensure that the flow of air moves from the decontamination unit and passes through as much of the work area as is possible. The local exhaust system shall not terminate in an occupied space or near a ventilation intake.

D. Filter Replacement: Change filters in the local exhaust units in accordance with the manufacturer's recommendations or when there is a loss of negative pressure. With the unit in operation change the prefilter and check for pressure drop. If the pressure drop remains, with the unit in operation change the secondary filter. If the pressure drop still remains, stop work, shut off the unit and replace the HEPA filter as per the manufacturer's recommendations. All used filters are to be disposed of as asbestos waste.

3.1 WASTEWATER FILTERING SYSTEM

A. All wastewater that will be discharged into the sanitary sewer system shall be treated as contaminated with asbestos and shall be filtered using two in-line filter cartridges with 2" inlets and outlets. The outlet of the first cartridge shall connect to the inlet of the second cartridge. The first cartridge shall contain six 100-micron prefilters and the second cartridge shall contain six 0.5-micron filters or equivalent staging according to type of filtering unit.

B. One spare set of 100-micron prefilters shall be maintained at the site at all times to replace prefilters during cleaning. Maintain at least one set of 0.5-micron or equivalent filters at the site at all times for replacements as necessary.

C. When prefilters become clogged, replace with spares, and wash out the prefilters in the Wash Area allowing drainage from the cleaning operation to go through the filtering system.

D. When the final filters become clogged, remove the filters, replace with new, and dispose of the clogged filters as contaminated waste.

E. Provide a holding tank for contaminated wastewater as required to prevent backup of water into the shower when the amount of water generated exceeds the flow rate of the filters.

3.2 WORK AREA PREPARATION

A. Posting of Danger Signs: Post danger signs in and around the work area to comply with 29 CFR 1926.1101, HIOSH 12-145.1 and all other Federal, State and local requirements. Signs shall be posted at a distance sufficiently far enough away from the work area to permit a person to read the sign and take the necessary protective measure to avoid exposure.

B. Inspect the Building Openings: At the beginning of each work day, the Contractor shall inspect and ensure that all doors, windows and other openings of affected buildings are closed and locked.

C. Critical Barrier Enclosures: Cover all openings including but not limited to glazed openings, doors, corridors, ducts, grilles, floor drains or plates, diffusers, vents, windows, electrical outlets, and any other penetrations to the work areas with two layers of 6-mil plastic and seal with tape.

D. Decontamination Enclosure Unit: Provide a decontamination enclosure unit as described in section 3.01.

E. Pre-Cleaning/Wet-Wiping:

1. Pre-clean fixed objects within the work area by using HEPA vaccum equipment and then wet-wiping as appropriate. All such fixed object will then be covered in 6-mil plastic sheeting and sealed with tape.
2. Clean the work area using HEPA vacuum equipment and the wet-wiping as appropriate. Do not use dust generating methods such as dry sweeping or non-HEPA vacuuming.

F. Plastic: Objects which may be contaminated during abatement or will be difficult to clean after abatement shall be taped and sealed in 6 mil plastic.

G. Temporary Electricity: Existing Electrical service to the facility may be used for temporary electrical power during abatement and replacement work. However, the electrical power within the work area must be shut off. The contractor shall verify the locations of available electrical service or use generators as needed.

H. Temporary Light: Provide a minimum of 35 foot-candles of illumination on surfaces for finishing operations and 100 foot-candles of illumination for removal operations. Provide 24 volt safety lighting.

I. Temporary Water: Existing water services to the facility may be used as a temporary water source during construction. Locations of line tie-ins must be approved by the State's authorized representative.

J. Temporary Sanitation Facilities: The Contractor shall provide toilet facilities for the use of Contractor personnel and agents during abatement work. Maintain toilet facilities in a clean and sanitary condition in compliance with all applicable Federal, State and local regulations.

K. Temporary Fire Protection: The Contractor shall provide and maintain temporary fire protection equipment during the asbestos abatement operations. Equipment shall be of the appropriate type to fight fires associated with the materials to be found within the work area.

L. Work Area Isolation and Protection: The Contractor shall isolate the work area for the duration of the project. The work area shall be protected subject to the approval of the State's authorized representative.

M. Warning Signs: The Contractor shall post warning signs that meet the requirements of OSHA 29 CFR 1926.1101 (k)(1) and (k)(2)(ii) at the outside door to the Decontamination System. The State's authorized representative may also require that the Contractor post additional warning signs around the work area or at other potential exposure points.

AFTER THE POSTING, SEALING AND TEMPORARY FACILITY WORK HAS BEEN COMPLETED, NOTIFY THE STATE'S AUTHORIZED REPRESENTATIVE FOR APPROVAL BEFORE PROCEEDING WITH THE ABATEMENT.

3.3 WORK PROCEDURE

Perform asbestos related work in accordance with 29 CFR 1926.1101, 40 CFR 61-SUBPART M, and as specified herein. Personnel shall wear and utilize protective clothing and equipment as specified herein. Eating, smoking, drinking, chewing gum, using tobacco, or applying cosmetics shall not be permitted in asbestos work or regulated area. Personnel of other trades not engaged in the removal of ACM shall not be exposed at any time to airborne asbestos unless all the personal protection and training provisions of this Specification are complied with. Establish critical barriers over all openings and penetrations which may lead to areas outside the asbestos control area. If an asbestos fiber release or spill occurs outside the asbestos control area, stop work immediately, correct the condition to the satisfaction of the State's authorized representative prior to resumption of work.

3.4 REMOVAL OF ASBESTOS CONTAINING ROOFING AND SEALANT

A. Surfaces to remain in areas where asbestos containing materials will be removed shall be covered with one layer of 6-mil plastic sheeting. Ventilation intake air sources shall be isolated or the system shall be shut down.

B. Wet the asbestos containing materials with a wetting agent (amended water) using a fine mist sprayer prior to the start of abatement. Wetting agent shall continuously be applied to control the release of asbestos fibers from the ACM prior to and during removal.

C. Carefully remove asbestos containing materials by lifting them in whole and unbroken pieces to the greatest extent possible. Continue to apply the wetting agent during removal to control dust. Avoid breaking and pulverizing the material.

D. The Contractor is prohibited from using methods or removal that creates excessive amounts of dust and debris.

E. Asbestos containing roofing material that has been removed from the roof shall not be dropped or thrown to the ground. Material shall be carried or passed to the ground by hand or lowered to the ground via covered, dust-tight chute, crane or hoist.

F. Intact asbestos containing roofing materials and any debris that is not intact shall be lowered to the ground as soon as is practicable, but in no event later than the end of the work shift. While the material is on the roof it shall either be kept wet, placed in an impermeable waste bag, or wrapped in plastic sheeting. Once lowered, unwrapped material shall be transferred to a closed receptacle.

G. Waste debris shall be bagged and sealed in properly labeled 6-mil plastic bags immediately after removal. The Contractor shall no allow removed ACM to accumulate in work area. All gross debris created by the removal process shall be bagged and sealed before the main break and again at the end of each workday.

H. After inspection and approval by the State's authorized representative, the Contractor shall seal all abated and cleaned surfaces with at least one (1) coat of an approved penetrating encapsulant.

I. The Contractor shall minimize contamination of the work floor, the exterior of disposal containers, and all other surfaces within the work area.

3.5 CLEANUP

All contaminated equipment and tools used for removal work shall be washed and cleaned in the work area prior to removing them from the work area. No washing of contaminated equipment and tools will be allowed outside the work area.

3.6 CLEARANCE OF REMOVAL WORK AREA

A. Remove all visible accumulation of ACM and debris by HEPA vacuums, sponging, and wet-wiping.

B. The State's authorized representative will visually inspect the affected areas for residual asbestos debris and wastes. The Contractor shall re-clean areas showing asbestos debris and wastes. If re-cleaning is required, the State's authorized representative will visually inspect for asbestos debris and wastes after re-cleaning. This process will be repeated until the State's authorized representative deems the area free of visible asbestos debris and wastes.

C. The work area shall be totally visibly clean before the remaining material is encapsulated. After the visual inspection has been passed, encapsulate all remaining materials.

D. The Contractor shall remove all signs, temporary barriers and materials when their use is no longer required.

3.7 AIR SAMPLING

A. Sampling for airborne concentrations of asbestos fibers shall be performed by the State's authorized representative. Sampling of airborne concentrations of asbestos fibers shall be performed in accordance with 29 CFR 1926.1101 and as specified herein. Unless otherwise specified, NIOSH Method 7400 will be followed for all sampling and analysis.

1. Sampling Prior to Asbestos Work: Baseline air sampling will be conducted by the State's authorized representative one-day prior to the masking and sealing operations for each removal site.
2. Sampling During Asbestos Work: The Contractor shall provide own personal sampling of 25% of his workers or minimum of two workers, whichever is greater as indicated in 29 CFR 1926.1101 and governing environmental regulations.
3. In addition, the performance and execution of the Contractor's work shall be closely and continuously monitored by the State's authorized representative. Air monitoring and inspection by the State's authorized representative shall be performed inside the work area, in the work area surroundings and in any occupied adjacent buildings to ensure full compliance with the Specification and all applicable regulations. The Contractor shall provide full cooperation and support to the State's authorized representative and to their technicians throughout the work.

B. Air Monitoring With Respect To Contractor's Employees

1. The Contractor shall be responsible for all personal air monitoring as required by OSHA regulations. All personal air monitoring will be conducted by an agent of the Contractor who is currently certified by the Hawaii Department of Health to conduct personal air sampling.
2. The Contractor shall provide own personal sampling of 25% of his workers or minimum of two workers, whichever is greater as indicated in 29 CFR 1926.1101 and governing environmental regulations.
3. Laboratory performing analysis shall be an independent party, not financially or managerially connected with the Contractor.
4. Results of sample analysis shall be provided to the State's authorized representative within forty-eight (48) hours of collection.

C. All other air sampling for compliance with the Specification shall be performed by the State's authorized representative.

3.8 DISPOSAL OF ASBESTOS CONTAINING MATERIAL

A. Collect asbestos waste, asbestos contaminated water, scrap, debris, bags, containers, equipment, and asbestos contaminated clothing which may produce airborne concentrations of asbestos fibers and place them in properly labeled transparent 6-mil plastic seamless bottomed bags. Wastes within the bags must be adequately wet in accordance with 40 CFR 61-SUBPART M.

B. Affix a warning and Department of Transportation (DOT) label to each bag or use bags preprinted with the approved warnings and DOT labeling. The name of the waste generator and the location at which the waste was generated shall be clearly indicated on the outside of each container.

C. Vehicles used for transporting waste to the disposal sites shall have a completely enclosed, lockable storage compartment. Storage compartments shall be covered and sealed with a minimum of one layer of 6-mil plastic sheeting on the sides and top and two layers of 6-mil plastic sheeting on the floor. The compartments shall be thoroughly wet-cleaned and HEPA vacuumed following the disposal of each load at the approved disposal sites.

D. Workers unloading bags at the disposal sites shall wear full body protective clothing and dual HEPA cartridge full face air purifying respirators.

E. Waste disposal manifest forms shall be properly completed to verify custody and ensure disposal of all ACM and asbestos contaminated waste at approved disposal sites. Forms shall be kept on file as directed by the State's authorized representative. Copies shall be submitted to the State's authorized representative no later than the next working day after each trip. It is the Contractor's responsibility to assure that any landfill used for disposal of asbestos containing or asbestos contaminated waste is approved for that purpose.

3.9 PAYMENT

Payment for removal and disposal of ACM shall be included in the lump sum bid. The final payment will not be made until proper documentation of the disposal of ACM and related waste are submitted.

END OF SECTION

SECTION 13282

LEAD CONTAINING PAINT CONTROL MEASURES

PART 1 GENERAL

1.1 SECTION INCLUDES

A. Removal and Disposal of Lead Containing Paint

B. Worker Protection

C. Lead Hazards

D. Lead Control Area Requirements

E. Site Monitoring for Lead

1.2 RELATED SECTIONS

A. Section 01715 - Existing Conditions for the results of the Owner's survey for materials.

1.3 COORDINATION

A. Coordinate work with Section 13281 - Removal and Disposal of Asbestos Containing Material.

B. Coordinate all of renovation of painted building components with the Owner's authorized representative.

1.4 REFERENCES

A. The publications listed below form a part of this Specification to the extent referenced. The publications are referred to in the text by the basic designation only, and include but are not limited to, the following:

B. CODE OF FEDERAL REGULATIONS (CFR)

29 CFR 1926.21	Safety Training and Education
29 CFR 1926.33	Access to Employee Exposure and Medical Record
29 CFR 1926.55	Gases, Vapors, Fumes, Dusts, and Mists
29 CFR 1926.59	Hazard Communication
29 CFR 1926.62	Lead Exposure in Construction
29 CFR 1926.65	Hazard Waste Operations and Emergency Response
29 CFR 1926.103	Respiratory Protection
40 CFR 260	Hazardous Waste Management Systems: General
40 CFR 261	Identification and Listing of Hazardous Waste
40 CFR 262	Generators of Hazardous Waste

40 CFR 263	Transporters of Hazardous Waste
40 CFR 264	Owners and Operators of Hazardous Waste Treatment, Storage, and Disposal Facilities
40 CFR 265	Interim Status Standard for Owners and Operators of Hazardous Waste Treatment, Storage, and Disposal Facilities
40 CFR 268	Land Disposal Restriction
40 CFR 745	Lead; Requirement for Lead-Based Paint Activities
49 CFR 172	Hazardous Materials, Tables, and Hazardous Materials Communications Regulations
49 CFR 178	Shipping Container Specification

C. HAWAII OCCUPATIONAL SAFETY AND HEALTH DIVISION (HIOSH)

12-114.2	Personal Protective Equipment
12-121.2	Fall Protection
12-122.2	Materials Handling, Storage, Use, and Disposal
12-148.1	Lead
12-151	Hazardous Waste Operations and Emergency Response
12-202-33.1	Lead

D. AMERICAN NATIONAL STANDARDS INSTITUTE (ANSI)

ANSI Z9.2	(1979; R 1991) Fundamentals Governing the Design and Operation of Local Exhaust Systems
ANSI Z88.2	(1992) Respiratory Protection

E. DEPARTMENT OF HOUSING AND URBAN DEVELOPMENT (HUD)

HUD Guidelines for the Evaluation and Control of Lead Based Paint Hazards in Housing

F. UNDERWRITERS LABORATORIES INC. (UL)

UL 586	(1990) High-Efficiency, Particulate, Air Filter Units

1.5 DEFINITIONS

A. Action Level: Employee exposure, without regard to use of respirators, to an airborne concentration of lead of 30 micrograms per cubic meter of air averaged over an 8-hour period.

B. Area Sampling: Sampling of lead concentrations within the lead control area and inside the physical boundaries which is representative of the airborne lead concentrations but is not collected in the breathing zone of personnel (approximately 1.5 to 1.8 meters above the floor).

C. Authorized Visitor: The Owner's authorized representative, Inspector, air monitoring personnel, or a representative of any regulatory or other agency having jurisdiction over the project.

D. Competent Person: As used in this section, refers to a person employed by the Contractor who is trained in the recognition and control of lead hazards in accordance with current federal, State, and local regulations, has the authority to take prompt corrective actions to control the lead hazards and is an EPA certified lead inspector or risk assessor.

E. Contaminated Area: An area where unwanted toxic or harmful substance exists.

F. Contractor: For this project, the Contractor is that individual, or entity under contract to the General Contractor to perform the herein listed work.

G. EPA: United States Environmental Protection Agency

H. Facility: The following structures located at the Heeia State Park Banquet Hall, 46-465 Kamehameha Highway, Kaneohe, Hawaii.

I. High Efficiency Particulate Air (HEPA) Filter: HEPA filtered vacuuming equipment with a filter system capable of collecting and retaining lead-contaminated particulate. A high efficiency particulate filter demonstrates at least 99.97 percent efficiency against 0.3 micron or larger size particles.

J. Lead: Metallic lead, inorganic lead compounds, and organic lead soaps. Excludes other forms of organic lead compounds.

K. Lead Containing Paint (LCP): Protective or decorative coating which contains lead. Includes Lead Based Paint (LBP).

L. Lead Control Area: A temporary area or structure or containment, sometimes equipped with HEPA filtered local exhaust that prevents the spread of lead dust or debris. Usually critical barriers and physical boundaries are employed to isolate the lead control area and to prevent migration of lead contamination and unauthorized entry of personnel.

M. Monitoring Specialist: A person who performs air monitoring and inspection during abatement work under the direction of the Owner's authorized representative.

N. OSHA: United States Department of Labor, Occupational Safety and Health Administration

O. Permissible Exposure Limit (PEL): 50 micrograms per cubic meter of air as an 8-hour time weighted average as determined by 29 CFR 1926.62. If an employee is exposed for more or less that 8 hours in a work day, the PEL shall be determined by the following formula:

PEL (micrograms per cubic meter of air) = 400/# hours worked per day

P. Personal Sampling: Sampling of airborne lead concentrations within the breathing zone of an employee to determine the 8-hour time weighted average concentration in accordance with

29 CFR 1926.62. Samples shall be representative of the employees work tasks. The breathing zone shall be considered an area within 12 inches of the nose or mouth of an employee.

Q. Physical Boundary: Area physically roped or partitioned off around lead control area to limit unauthorized entry of personnel.

R. Qualified Testing Laboratory:

1. Environmental and Work Area Monitoring Laboratory: The testing laboratory employed by the Owner's authorized representative to perform analysis of environmental and work area air monitoring samples and report concentrations of airborne lead.

2. The laboratory shall be accredited under the EPA's National Lead Laboratory Accreditation Program (NLLAP) by the American Industrial Hygiene Association's (AIHA's) Environmental Lead Laboratory Accreditation Program (ELLAP) and successfully participating in the Environmental Lead Proficiency Analytical Testing (ELPAT) program for each lead matrix analyzed by the laboratory. The laboratory shall fulfill all requirements of accreditation for analyzing lead in air. Laboratory personnel performing the work shall have been judged proficient in the analysis of lead in the applicable parameter by successful participation within the last year in AIHA's ELPAT.

3. Personal Air Monitoring Laboratory: The testing laboratory utilized by the air monitoring firm retained by the Contractor to perform analysis of personal air monitoring samples and report airborne concentrations of lead. Collection of the Contractor's OSHA personal air samples will be performed by a firm independent of the Contractor, at the Contractor's expense.

4. The laboratory shall be accredited under the EPA's National Lead Laboratory Accreditation Program (NLLAP) by the American Industrial Hygiene Association's (AIHA's) Environmental Lead Laboratory Accreditation Program (ELLAP) and successfully participating in the Environmental Lead Proficiency Analytical Testing (ELPAT) program for each lead matrix analyzed by the laboratory. The laboratory shall fulfill all requirements of accreditation for analyzing lead in air. Laboratory personnel performing the work shall have been judged proficient in the analysis of lead in air by successful participation within the last year in AIHA's ELPAT.

5. Toxicity Characteristic Leaching Procedure (TCLP) Testing Laboratory: The testing laboratory employed by the Contractor to perform TCLP tests of a representative sample of the debris waste stream of each structure and of any lead-contaminated chips or debris generated through abatement to determine whether or not the waste is hazardous or non-hazardous.

6. The laboratory shall be experienced in and analyze TCLP samples using the EPA Method 1311/6010.

S. Owner: The State of Hawaii Department of Land and Natural Resources.

T. Owner's Authorized Representative: Authorized City and County of Honolulu representative who is an EPA certified Lead Inspector/Assessor and either an EPA certified Lead

Supervisor or Project Monitor, performs air monitoring and inspection activities during abatement and renovation work and shall have the authority to initiate engineering controls.

1.6 SCOPE OF WORK

A. In performing the renovation and disposal of components with lead-containing paint, all possible safeguards, precautions and protective measures should be utilized to prevent exposure of any individual to lead particulates.

B. The Contractor shall ensure all work is in compliance with any applicable Federal, State and local laws and regulations concerning lead, including all incidental and pertinent operations during the renovation of structures located at the Facility.

C. Lead was detected at various concentrations on painted surfaces of all structures at the site as specified in the *Limited Hazardous Materials Survey Report, Heeia State Park, Banquet Hall Improvements, Kaneohe, Oahu, Hawaii, Job No. 5-OP-28,* dated March 31, 2016, prepared by EnviroServices & Training Center, LLC.

D. The Contractor shall furnish all labor, materials and equipment necessary to complete the safe removal, transportation and disposal of loose and flaking lead-containing paint and safe renovation, proper handling, transportation and disposal of the structure(s) to be renovated.

E. The work specified herein shall include the preparation of work areas and removal, transportation and disposal procedures. All work shall be performed as required of lead-containing and lead-contaminated materials by persons trained, knowledgeable and qualified in the techniques of handling and disposing of lead-containing and lead-contaminated materials and in the subsequent cleaning of lead-contaminated areas. Workers shall be EPA certified lead workers and capable and willing to perform the work of this contract.

F. This Specification covers the requirements and procedures for limiting occupational and environmental exposure to lead during renovation of various LCP painted structures at the Facility.

G. The Contractor shall review the *Limited Hazardous Materials Survey Report, Heeia State Park, Banquet Hall Improvements, Kaneohe, Oahu, Hawaii, Job No. 5-OP-28,* dated March 31, 2016, prepared by EnviroServices & Training Center, LLC and ensure that he fully understands where lead-containing paints have been identified, that the testing was for design purposes only, and that the results do not satisfy any of the requirements of Title 12, (Department of Labor and Industrial Relations), Subtitle 8 (Division of Occupational Safety and Health), Chapter 148 (Lead Exposure in Construction), Hawaii Administrative Rules.

H. Materials resulting from the renovation work, except as otherwise specified, shall become the property of the Contractor. The Contractor shall be required to separate metal renovation debris, steel components and miscellaneous metal elements and recycle them as scrap metal.

I. The Contractor shall conduct TCLP tests for lead of a representative sample of the debris waste stream of each structure and of any lead-contaminated chips or debris generated through abatement to determine whether the waste is hazardous or non-hazardous.

1.7 QUALITY ASSURANCE

A. Owner's authorized representative's responsibilities:

1. Review and approve Contractor personnel training.

2. Review and approve Contractor's Work Procedure and Waste Management Plan for conformance to the applicable reference standards.

3. Inspect work for conformance to the Contractor's approved Work Procedure and Waste Management Plan.

4. Schedule and conduct all area air monitoring, inspection and reporting.

5. Schedule and conduct all other required air monitoring, inspection and reporting.

6. Monitor work to verify that work is performed at all times in accordance with the requirements of this Specification.

7. Monitor work to verify that adequate control is being maintained at all times of hazardous exposure to employees and to the environment.

8. Be onsite during all worksite preparation and cleaning, be available by telephone, pager or answering service at all other times during the work and able to be present at the work site in no more than 2 hours.

9. After final cleanup, certify that lead control area is free of any lead paint chip debris, waste or dust and that final area air clearance samples have lead concentrations at or below the background level.

B. Safety and Health Compliance:

1. In addition to the detailed requirements of this Specification, the Contractor shall comply with laws, ordinances, rules, and regulations of Federal, State, and local authorities regarding removing, handling, storing, transporting, and disposing of lead waste materials.

2. Comply with the applicable requirements of the current issue of 29 CFR 1926.62 and HIOSH 12-202-33.

3. Where requirements of this Specification and the referenced documents vary, the most stringent requirement shall apply.

C. Pre-Construction Conference: The Owner's authorized representative shall meet with the Contractor and Architect to discuss in detail the work procedures, precautions and area and personal air monitoring to be employed.

1.8 CONTRACTOR'S RESPONSIBILITIES

A. The Contractor acknowledges that he alone is responsible for the instruction of personnel in and enforcement of personal protection requirements. The Contractor shall comply with all requirements of 29 CFR 1926.62 and HIOSH 12-148.1. The Contractor shall also be responsible for complying with all applicable EPA regulations in regards to lead-containing materials.

   1. Respirators: Use appropriate respirators and filters that meet all requirements of OSHA 29 CFR 1926.62 and HIOSH 12-148.1.

   2. Protective Clothing: Use appropriate personal protective clothing (disposable suits, eye protection, gloves, etc.) as required by OSHA 29 CFR 1926.62 and HIOSH 12-148.1.1.

1.9 REQUIREMENTS

A. Notification: The Contractor shall notify the Owner's authorized representative 15 days prior to the start of any abatement or renovation work involving LCP painted materials. As required, notify the Department of Health a minimum of 10 working days prior to disturbance of any lead-containing paint.

B. Certification: The Contractor shall use only EPA certified Lead Workers or Supervisors to perform all work that involves lead-containing or lead-contaminated materials.

C. Training: The Contractor shall be solely responsible for complying with all OSHA 29 CFR 1926.62 and HIOSH 12-148.1 requirements to train each employee. Training shall include, but not be limited to, the hazards of lead; safety and health precautions; and the use and requirements for protective clothing, equipment, and respirators.

D. Medical Examinations: Before exposure to lead-contaminated dust, the Contractor shall provide his employees with a comprehensive medical examination as required by 29 CFR 1926.62 and HIOSH 12-202-33. The examinations will not be required if records show that Contractor's employees have been examined as required by 29 CFR 1926.62 within the last year.

E. Respiratory Protection Program: The Contractor shall establish and implement a Respiratory Protection Program as required by ANSI A88.2, 29 CFR 1910.134, 29 CFR 1926.62, and HIOSH 12-148.1.

F. Hazard Communication Program: The Contractor shall establish and implement a Hazard Communication Program as required by 29 CFR 1926.59.

G. Safety Program: Contractor shall establish and implement a Health and Safety Plan which meets the specifications of 29 CFR 1926 Subparts C and D.

H. Lead-Based Paint Disturbance/Removal Plan: The Contractor shall establish and implement a Lead-Based Paint Disturbance/Removal Plan. This shall include a written Compliance Program which meets the specifications of 29 CFR 1926.62 and an Occupant Protection Plan which meets the specifications of 40 CFR 745.227(e)(5).

I. Rental Equipment Notification - If rental equipment is to be used during lead-containing paint handling and disposal, notify the rental agency in writing concerning the intended use of the equipment.

J. Applicable Standards and Guidelines: All work under this contract, and any other trade work conducted with the project, shall be done in strict accordance with all applicable Federal, State and local regulations, standards, documents and codes governing the preparation, removal, renovation, treatment, transportation and disposal of lead-containing and lead-contaminated materials. The most recent edition of any relevant regulation, standard, document or code shall be applicable.

K. The Contractor shall examine and have at all times at his office (one copy) and in view at each job site (one copy) the following materials:

1. State of Hawaii Department of Labor and Industrial Relations; Occupational Safety and Health Standards; Part 8, Section 12-148;

2. Department of Housing and Urban Development; Office of Public and Indian Housing; Lead Paint Guidelines;

3. Title 29 Code of Federal Regulations Part 1926.62; Safety and Health Standards;

4. Title 29 Code of Federal Regulations Part 1910.134; Respiratory Protection;

5. Title 40 Code of Federal Regulations Part 261; Identification and Listing of Hazardous Waste;

6. Title 40 Code of Federal Regulations Part 262; Standards Applicable to Generators of Hazardous Waste;

7. Title 40 Code of Federal Regulations Part 263; Hazardous Waste Transporters;

8. Title 40 Code of Federal Regulations Part 745; Lead; Requirement for Lead-Based Paint Activities;

9. Copies of any other applicable Federal, State and local regulations, standards, documents and codes;

10. Copies of the procedures to be followed during medical emergencies, including phone numbers of the nearest hospital or other emergency medical facility, which shall be posted by the nearest telephone;

11. Copies of the Contractor's Respiratory Protection Program, Hazardous Communication Program, Safety Program, Lead Based Paint Disturbance/Removal Plan and Work Procedure and Waste Management Plan;

12. Copies of Material Safety Data Sheets for all chemicals used;

13. Copies of the Contractor's Competent Person's qualifications and employee EPA Lead Worker/Supervisor Certificates; and

14. Copies of Personal Air Monitoring results.

1.10 CONTRACTOR USE OF PREMISIS

A. General: The Contractor shall cooperate fully with the Owner during project execution to minimize conflicts.

B. Pollution Control: The Contractor shall not contaminate the air, water, soil or other items with hazardous materials such as cleaning solutions, lead-containing paint or lead-contaminated debris and wastes, etc. The Contractor shall immediately clean the contaminated area and dispose of the waste in compliance with all Federal, State and local laws, ordinances, rules and regulations at his or her own expense.

C. Use of Site:

1. Confine operation at the site to the areas permitted under the contract. Portions of the site beyond areas on which work is indicated are not to be disturbed. Conform to site rules and regulations affecting work while at the project site.

2. Do not unreasonably encumber the site with materials or equipment. Confine stockpiling of materials and location of storage to the areas authorized by the Owner's authorized representative.

1.11 COMMENCEMENT OF WORK

A. Each time work that calls for the disturbance of lead-containing paint is to begin in a new work area, the Contractor shall not commence work unless the following requirements have been met.

B. Submittals: All submittals, notifications, posting and permits must be provided and be satisfactory to the Owner's authorized representative.

C. Equipment: All equipment required for the work such as removal, clean-up and disposal must be on hand.

1.12 SUBMITTALS

A. Manufacturer's Catalog Data: Submit copies of manufacturer's specifications, installation instructions and field test materials for all chemicals and equipment related to lead-containing and lead-contaminated materials, including any other data that may be required to demonstrate compliance with these Specifications and proposed uses. This includes, but is not limited to, data for vacuum filters and respirators.

B. Material Safety Data Sheets: Submit copies of the Material Safety Data Sheets for all chemicals used.

C. Notifications: As required, provide the Hawaii State Department of Health written notice of any on-site project activity involving the disturbance of lead-containing paint as early as possible but at least 10 working days prior to commencement of work. Submit a copy of the written notification to the Owner's authorized representative.

D. Respiratory Protection Program: Submit no later than 10 consecutive working days from notice of award, a copy of the Contractor's Respiratory Protection Program prepared in accordance with all applicable laws. The Contractor shall also submit fit test records on all employees to be used on this project who may be required to wear a respirator.

E. Hazard Communication Program: Submit no later than 10 consecutive working days from notice of award, a copy of the Contractor's Hazard Communication Program prepared in accordance with all applicable laws.

F. Safety Program: Submit no later than 10 consecutive working days from notice of award, a copy of the Contractor's Health and Safety Plan prepared in accordance with all applicable laws.

G. Lead-Based Paint Disturbance/Removal Plan: Submit no later than 10 consecutive days from notice of award, a copy of the Contractor's Lead-Based Paint Disturbance/Removal Plan, including a written Compliance Program which meets the specifications of 29 CFR 1926.62 and an Occupant Protection Plan which meets the specifications of 40 CFR 745.227(e)(5).

H. Rental Equipment: When rental equipment is to be used during lead-containing paint handling and disposal, a written notification concerning intended use of the rental equipment must be provided to the rental agency with a copy submitted to the Owner's authorized representative.

I. HEPA Vacuums: Submit no later than 10 consecutive working days from notice of award, manufacturer's certification that vacuums conform to ANSI Z9.2-79, Fundamentals Governing the Design and Operation of Local Exhaust Systems as applicable to this project.

J. Contractor's Competent Person's Qualifications: The Contractor shall submit no later than 10 consecutive working days from notice of award the Contractor's Competent Person's name, contact information, valid qualifications, and current certification of completion of the EPA Lead Inspector/Assessor course.

K. Certification of medical examinations: The Contractor shall submit documentation from a physician that all employees or agents who may be exposed to airborne lead-containing dust or fumes have been medically monitored to determine whether they are physically capable of working while wearing the respirator required without suffering adverse health effects. In addition, the Contractor shall document that his personnel have received medical monitoring as required in the HIOSH lead standard (12-148).

L. Employee EPA Lead Worker/Supervisor Certifications: Submit no later than 10 consecutive working days from notice of award, documentation that each and every individual, including foreman, supervisors, other company personnel or agents, and any other individual who may be exposed to airborne lead dust and who may be responsible for any aspects of lead-

containing paint removal activities which may occur, has currently attended and passed the EPA Lead Worker and/or EPA Lead Supervisor course, whichever is relevant to that worker's responsibilities. These courses shall be EPA-approved or approved by a State Accreditation Program in the most current listing of the Federal Register. No worker shall be allowed in the lead control area if they are found to have an expired accreditation certificate. The Contractor shall be responsible for keeping the documentation up to date and submitting subsequent documentation to the Owner's authorized representative before any additional employee or individual, not currently on the list, is allowed within the lead control area.

M. Employee training certifications: Submit documentation within 10 consecutive calendar days of award, satisfactory to the Owner's authorized representative, that the Contractor's employees, including foreman, supervisors and any other company personnel or agents who may be exposed to airborne lead dust or who may be responsible for any aspects of lead-containing paint removal activities, have received training in accordance with OSHA 29 CFR 1926.62 and the HIOSH lead standard (12-148). Training shall include, but not be limited to, the dangers of lead exposure, respirator use and decontamination procedures.

N. Work Procedure and Waste Management Plan

1. The Contractor shall develop and submit a detailed written job-specific Work Procedure and Waste Management Plan to establish and implement practices and procedures for the proper testing, handling and disposal of waste generated by the abatement of loose and flaking LCP and renovation work involving LCP painted surfaces. Any surface with lead in detectable quantities may pose an occupational or environmental health risk depending on work practices and must be addressed in the Waste Management Plan.

2. The Contractor must obtain the Owner's authorized representative's approval of the Work Procedure and Waste Management Plan prior to starting any work.

3. The Work Procedure and Waste Management Plan shall effectively and clearly communicate the means for complying with requirements of this Section and EPA regulations and procedures for the classifying, handling, and disposal of solid and liquid waste. Generic statements shall not be used. Specific methods, procedures, and details are required. The plan shall address procedures for handling and disposal of both hazardous and non-hazardous waste.

4. The Work Procedure and Waste Management Plan shall also comply with applicable requirements of all other Federal, State and local waste/hazardous waste regulations.

5. Required components of Work Procedure and Waste Management Plan include:

   a. A sketch showing the location, size, and details of lead control areas, signage, security, decontamination and support areas including eating, drinking, smoking, and restroom areas;
   b. Procedures, interface of trades, sequencing of lead-related work, respirators, protective equipment;

   c. A detailed description of the methods of control of the work to ensure that airborne lead concentrations of 30 micrograms per cubic meter of air are not exceeded;

d. Work plan and schedule for waste containment and disposal including daily cleanup and disposal of stray paint chips and paint dust;

e. List of waste handling equipment to be used in performing the work, to include cleaning, volume reduction, and transport equipment;

f. Names and qualifications (experience and training) of personnel who will be working on-site with hazardous wastes;

g. Estimated quantities of wastes to be generated and disposed of as well as a description of the methods used to identify hazardous wastes encountered with the work;

h. Spill prevention, containment, and cleanup contingency measures to be implemented;

i. Description of procedures to stop work in the event that area monitoring and laboratory analysis indicate air concentrations of lead in excess of the action level;

j. Methods to eliminate runoff of the water used to minimize dust created by renovation work, and collection and disposal plan for wastewater and paint debris;

k. Names, EPA Transporter Identification numbers and qualifications of all Sub-contractors that will be transporting, storing, treating, or disposing of the wastes as hazardous waste. Include the facility location, facility operator and a 24-hour point of contact; and

l. EPA Generator ID number for the work site.

O. Laboratory Qualifications:

1. Personal Air Monitoring Laboratory: Submit name, address and telephone number of testing laboratory responsible for analysis of personal air monitoring samples and reporting concentrations of airborne lead. The laboratory shall be accredited under the EPA's National Lead Laboratory Accreditation Program (NLLAP) by the American Industrial Hygiene Association's (AIHA's) Environmental Lead Laboratory Accreditation Program (ELLAP) and successfully participating in the Environmental Lead Proficiency Analytical Testing (ELPAT) program for each lead matrix analyzed by the laboratory. The laboratory shall fulfill all requirements of accreditation for analyzing lead in air. Laboratory personnel performing the work shall have been judged proficient in the analysis of lead in air by successful participation within the last year in AIHA's ELPAT.

2. TCLP Testing Laboratory: Submit name, address and telephone number of testing laboratory responsible for TCLP analysis. The laboratory shall be experienced in and analyze TCLP samples using the EPA Method 1311/6010.

P. Personal Air Monitoring Results: Submit test results to the Owner's authorized representative and the affected Contractor's employees within three (3) working days of collection, signed by the testing laboratory employee performing the analysis and the Contractor's Competent

Person. Test results for the first two full days of initial personal air monitoring shall be submitted to the Owner's authorized representative within 48 hours after completion of sampling.

Q. TCLP Results: Submit test results to the Owner's authorized representative within three (3) working days of collection, signed by the testing laboratory employee performing the analysis and the Contractor's Competent Person.

R. Log of Lead Disturbance Work: Complete and submit a daily log of all lead disturbance work performed.

S. Hazardous Waste Disposal Log: Complete and submit the Hazardous Waste Disposal Log (TG 13282 Appendix A), including, but not limited to, disposal facility location, date of disposal, description of hazardous waste, approximate weight of hazardous waste and any special handling procedures.

T. Project Hazardous Waste Log: Complete and submit to the Owner's authorized representative the Project Hazardous Waste Log (TG 13282 Appendix B).

U. Hazardous Waste Treatment or Disposal Facility: Submit written evidence that the hazardous waste treatment, storage or disposal facility is approved for lead disposal by the EPA and State or local regulatory agencies.

V. Waste Disposal Manifest Forms: Submit no later than 10 consecutive working days from the date the waste is removed from the work area, copies of all completed hazardous waste manifests from treatment or disposal facility, signed and dated by the initial transporter in accordance with 40 CFR 262.

W. Dump Receipts: Submit no later than 10 consecutive working days from the date the waste is removed from the work area, copies of all dump receipts from the landfill operator for all hazardous waste materials.

PART 2 PRODUCTS

2.1 MATERIALS

A. Asbestos Prohibition: No asbestos containing materials or equipment shall be used in this section. The Contractor shall ensure that all materials and equipment incorporated in the project are asbestos-free.

B. Chemicals: Submit applicable Material Safety Data Sheet for all chemicals used on this project. Use the least toxic product approved by the Owner's authorized representative.

2.2 EQUIPMENT

A. Respirators: Select respirators approved by the National Institute for Occupational Safety and Health (NIOSH), Department of Health and Human Services. Respirators shall comply with the requirements of 29 CFR 1926.62 and HIOSH 12-148.1. For this project, respirators shall

be worn at all times throughout the removal and renovation process or as deemed necessary by the Contractor's Competent Person.

B. Protective Clothing: Furnish personnel exposed to lead dust with appropriate personal protective equipment as required by 29 CFR 1926.62 and HIOSH 12-148.1. For this project, respirators shall be worn at all times throughout the removal process or as deemed necessary by the Contractor's Competent Person.

PART 3 EXECUTION

3.1 POTENTIAL LEAD HAZARDS

A. The disturbance or dislocation of lead-containing materials may cause lead-containing dust to be released into the atmosphere, thereby creating a potential health hazard to the workers and the general public. Apprise all workers, supervisory personnel, subcontractors, consultants and authorized visitors who will be at the job site of the seriousness of the hazard and of proper work procedures that must be followed.

B. Where in the performance of the work, workers, supervisory personnel, subcontractors, or consultants may encounter, disturb, or otherwise function in the immediate vicinity of any identified lead-containing materials, take appropriate continuous measures as necessary to protect all workers and the general public from the potential hazard of exposure to respirable airborne lead dust. Such measures shall include the procedures and methods described in the regulations of applicable Federal, State and local agencies.

3.2 LEAD-CONTAINING MATERIAL

A. Various LCP painted surfaces exist at the site as specified in the *Limited Hazardous Materials Survey Report, Heeia State Park, Banquet Hall Improvements, Kaneohe, Oahu, Hawaii, Job No. 5-OP-28,* dated March 31, 2016, prepared by EnviroServices & Training Center, LLC.

B. Spot remove lead-containing paint only as necessary for the safe renovation of LCP painted structures. Use wet methods or HEPA vacuum attached mechanical equipment to remove lead-containing paint.

3.3 LEAD CONTROL AREA REQUIREMENTS

A. Boundary Requirements:

1. Establish a lead control area to contain renovation operations by demarcating a boundary around the structure to be renovated in accordance with the Contractor's approved Work Procedure and Waste Management Plan. The lead control area shall be isolated by physical boundaries, such as temporary fencing, boundary tape and rope, to prevent unauthorized entry of personnel. If the work practice relating to lead-containing paint will create airborne dust, create a full containment with critical barriers, HEPA filtered exhaust, negative pressure enclosure and decontamination facilities.

2. Post Warning and Danger signs in accordance with 29 CFR 1926.62 and HIOSH 12-148.1. Signs shall be placed at all approaches to lead control area and at the boundary of the lead control area. Signs shall be posted at all locations where airborne lead concentrations may exceed ambient background levels. Locate signs at such a distance that personnel may read the sign and take necessary protective measures to avoid exposure. In addition, post signs with "Authorized Entry Only, Lead Control Area" and "PPE Required" at every entry point.

B. Personal Protection Requirements:

1. No one will be permitted in the lead control area unless they have been given appropriate training, Personal Protective Equipment (PPE) and medical examinations. PPE is required for all employees and persons within the lead control area.

2. Eating, drinking, smoking and application of cosmetics shall be permitted only in areas designated by the Contractor, approved by the Owner's authorized representative, and which are free of dust generated by the renovation. Eating, drinking, smoking and application of cosmetics are not permitted in the lead control area.

3. Where eyes may be exposed to injurious corrosive materials, suitable facilities for quick drenching or flushing of the eyes shall be provided within the work area.

C. Environmental Protection Requirements:

1. Ensure airborne lead levels outside the lead control area are below the Action Level.

2. Perform work without damage to or contamination of the areas adjacent to locations where lead-containing or lead-contaminated material will be disturbed as a result of renovation activities. If any part of the work area is damaged or contaminated during the disturbance of lead paint, restore the damaged or contaminated area to its original condition or better, as determined by the Owner's authorized representative.

3. Any air-conditioning units with intake or exhaust in a lead control area shall be shut down and sealed until that lead control area has been cleared with a level of airborne lead below the background level.

D. Exit Procedures: Whenever personnel exit the lead control area, they shall perform the following procedures and shall not leave the work place wearing any clothing or other equipment worn in the lead control area:

1. Vacuum themselves off with HEPA-filtered vacuum equipment. Use UL-586 labeled HEPA filters;

2. Remove protective clothing in the designated changing area within the lead control area and place them in an approved impermeable disposal bag;

3. Wash hands and face in the designated changing area before exiting to the designated clean area outside of lead control area; and

4. Prevent the migration of mud, dust and/or debris carried on work boots, clothing or equipment from the renovation site into areas beyond the lead control area.

3.4 REMOVAL OF FLAKING LEAD-CONTAINING PAINT

A. Perform lead work as specified herein. Use procedures and equipment required to limit occupational exposure and environmental contamination with lead when lead abatement is performed in accordance with 29 CFR 1926.62 and as specified herein.

B. Dispose of all lead-containing paint and associated waste in compliance with all Federal, State and local requirements.

C. Clean, as needed, all floor surfaces adjacent to the lead control area using a HEPA filtered vacuum.

D. Use 6-mil polyethylene sheeting to cover ground underneath the abatement work area.

E. Use 6-mil polyethylene sheeting to cover any surfaces and equipment that will not be painted, disturbed or utilized during disturbance of lead-containing paint. After completion of work, the Contractor shall repair all damage from fastening and sealing and remove all adhesive residues from surfaces at no additional cost to the Owner.

F. Manual or power sanding, grinding, abrasive or sand blasting of interior and exterior surfaces is not permitted. Select paint removal processes (describe in the Work Procedure and Waste Management Plan) to minimize contamination of work areas with lead-contaminated dust or other lead-contaminated debris/waste.

G. Open flame burning or torching of lead-containing paint is prohibited.

H. The use of heat guns or hot knives that reach temperatures above 650 degrees Fahrenheit, on surfaces containing lead-containing paint, is prohibited.

I. Use of vacuum equipment without HEPA filters in areas containing lead-containing paint is prohibited.

J. The use of chemical paint strippers containing methylene chloride is prohibited.

K. Control of Airborne Lead Level: The Contractor shall control the lead level outside of the work boundary to less than the action level at all times.

L. Control of Visible Emissions: The Contractor shall control lead dust emissions from the project site so that no visible lead dust emissions leave the project work areas during renovation work. Wet methods or other engineering controls shall be used to control the emission of dust and/or debris from the renovation site in accordance with all applicable Federal, State, and local regulations. Emissions in excess of the above shall be cause for immediate shut down of the project until corrective measures are implemented.

M. Control of Water Runoff: Water used to control emissions of dust from the renovation or as part of the renovation activities shall not be allowed to flow uncontrolled from a lead control area, to any adjacent area or to enter the sanitary or storm water sewer system. All water runoff from lead control areas shall pass through a filter berm to remove particulate matter prior to discharge to water sewer system. The Contractor shall use only sufficient water to adequately control dust. Under no conditions shall wastewater be disposed of in storm drains or dumped on the ground.

N. Perform removal of lead containing paint as indicated in Federal, State, and local regulations. The worksite preparation (barriers or containments) shall be job dependent.

3.5 DISTURBANCE OF LEAD-CONTAINING PAINT DURING RENOVATION

A. Disturbance of lead-containing paint as a result of renovation activities shall be kept to a minimum. Water spray, vacuuming and other engineering controls shall be used to minimize airborne lead dust. Care shall be taken to avoid pulverizing, scraping, or crumbling lead painted debris.

B. Dispose of all lead-containing paint and associated waste in compliance with all Federal, State and local requirements.

C. Clean, as needed, all floor surfaces adjacent to the lead control area using a HEPA filtered vacuum.

D. Dry sanding or chipping, and other abrasive dry surface preparation methods on surfaces containing lead-containing paint, are prohibited.

E. The use of heat guns or hot knives that reach temperatures above 650 degrees Fahrenheit, on surfaces containing lead-containing paint, is prohibited.

F. Open flame burning or torching of lead-containing paint is prohibited

G. Use of vacuum equipment without HEPA filters in areas containing lead-containing paint is prohibited.

H. Sandblasting of surfaces containing lead-containing paint is prohibited.

I. The use of chemical paint strippers containing methylene chloride is prohibited.

J. Control of Airborne Lead Level: The Contractor shall control the lead level outside of the work boundary to less than the action level at all times.

K. Control of Visible Emissions: The Contractor shall control lead dust emissions from the project site so that no visible lead dust emissions leave the project work areas during renovation work. Wet methods or other engineering controls shall be used to control the emission of dust and/or debris from the renovation site in accordance with all applicable Federal, State, and local regulations. Emissions in excess of the above shall be cause for immediate shut down of the project until corrective measures are implemented.

L. Control of Water Runoff: Water used to control emissions of dust from the renovation or as part of the renovation activities shall not be allowed to flow uncontrolled from a lead control area, to any adjacent area or to enter the sanitary or storm water sewer system. All water runoff from lead control areas shall pass through a filter berm to remove particulate matter prior to discharge to water sewer system. The Contractor shall use only sufficient water to adequately control dust. Under no conditions shall wastewater be disposed of in storm drains or dumped on the ground.

3.6 WORK PROCEDURE

Perform renovation and removal work in accordance with approved Work Procedure and Waste Management Plan. Use procedures and equipment required to limit occupational exposure and environmental contamination with lead when renovation and removal work are performed in accordance with 29 CFR 1926.62 and as specified herein. Dispose of all material containing lead and associated waste in compliance with Federal, State, and local requirements.

3.7 SITE MONITORING AND RESULTS

A. Personal air monitoring shall be performed by a Competent Person employed by the Contractor.

B. The Contractor's Competent Person shall perform initial personal air monitoring to determine employee exposure during renovation work. During initial personal monitoring, the first two full days of work (two 8-hour work shifts), all workers shall be provided with a minimum of air-purifying half-mask respirators and disposable protective clothing.

C. Personal monitoring samples shall be taken on at least 25 % of the employees or a minimum of 2 employees, whichever is greater, or a representative sample of employees with the greatest potential for exposure as determined by the Owner's authorized representative during each work shift.

D. At the end of the period of initial determination all results shall be submitted to a laboratory for analysis by NIOSH Method 7082.

E. Results from the first two full days (two 8-hour work shifts) of initial air monitoring, signed by the testing lab employee performing the analysis and the Competent Person, shall be provided to the Owner's authorized representative within 48 hours after completion of sampling. Results of initial air monitoring shall be used by the Contractor's Competent Person to determine appropriate worker protection requirements for similar work activities. Determination shall be submitted to Owner's authorized representative within 48 hours.

F. Regardless of initial air monitoring results, continue personal air monitoring during the entire renovation operations.

G. If the personal air monitoring tests covering a period of two full work days (two 8-hour work shifts) show airborne lead concentrations below the action level, the use of HEPA-filtered air

purifying respirators may not be required by the Contractor's Competent Person. Other elements of protective clothing shall continue to be worn throughout the renovation operations.

H. If exposure to lead at or in excess of 30 micrograms per cubic meter of air as an 8-hour time weighted average is indicated, the Contractor's Competent Person will immediately notify the Contractor and Owner's authorized representative. The Contractor will provide and require all persons exposed to this concentration of airborne lead dust to wear, at a minimum, half mask air purifying respirators with HEPA filters. In addition, the Contractor's work procedures will be immediately reviewed by the Owner's authorized representative and the Contractor and modifications in the Contractor's work performance shall be implemented to lower the concentration of airborne lead.

I. Results of air monitoring shall be submitted to the Owner's authorized representative within three (3) working days of collection, signed by the testing lab employee who performed the analysis and the Competent Person.

J. Environmental and work area air monitoring of airborne lead concentrations shall be performed by the Owner's authorized representative in accordance with 29 CFR 1926.62 and as specified herein.

K. The Owner's authorized representative shall collect area air samples outside the work area prior to the start of work in order to establish the background level of lead in the air. The samples shall be analyzed by the Environmental and Work Area Monitoring Laboratory for the airborne concentration of lead. This concentration shall be the background level.

L. The Owner's authorized representative shall perform area air monitoring during the entire renovation operation. The Contractor shall allow access to the work area and assist the authorized representative as needed.

M. Sufficient area air monitoring shall be conducted at the border of the lead control area to ensure unprotected personnel are not exposed to lead concentrations above 30 micrograms per cubic meter of air at all times. As a minimum, conduct area monitoring daily during each shift in which renovation operations are performed in areas immediately adjacent to the lead control area. At least one sample on each shift shall be taken on the downwind side of the lead control area.

N. If the outside boundary of the lead control area is determined to have air lead levels above the background levels the Contractor shall be required to adequately correct the conditions causing the increased lead levels. Any work necessary to correct the condition will be completed by the Contractor at no additional cost to the Owner.

O. If the outside boundary of the lead control area is determined to have air lead levels at or above 30 micrograms per cubic meter of air, the Contractor shall immediately stop work and correct the conditions causing the increased level.

P. Renovation work shall resume only when approval is given by the Owner's authorized representative.

3.8 CLEANUP

A. Clean surfaces and surrounding ground within the lead control area daily. Do not allow paint chips, dust and debris to accumulate.

B. Restrict and minimize the spread of dust and debris. Keep waste from being distributed over the general area. Do not dry sweep or use compressed air to clean the area.

C. When the operation has been completed, the area will be cleaned of all visible lead paint contamination. The Owner's authorized representative will visually inspect the affected areas for residual lead paint chips and the Contractor shall re-clean areas showing residual paint chips and debris.

D. If re-cleaning is required, the Owner's authorized representative will visually inspect for lead debris after the re-cleaning. This process will be repeated until the Owner's authorized representative deems the area free of visible paint chips and debris.

E. Do not remove the lead control area barriers or roped-off perimeter and warning signs prior to the Owner's receipt of the Owner's authorized representative's lead clearance certification.

3.9 WASTE CHARACTERIZATION

A. TCLP testing of the gross solid renovation debris shall be performed by the Contractor to characterize the debris as either non-hazardous or hazardous waste. Metal items to be demolished and removed shall be recycled.

B. The Contractor shall not concentrate, treat, or intermix wastes from outside this project with the debris and wastes generated by this project.

C. For lead-containing paint wastes generated by renovation operations, including used disposal PPE, lead paint chips and waste from paint stripping operations, TCLP testing of the waste shall be provided and paid for by the Contractor as specified herein.

D. All TCLP test samples shall be collected by the Contractor in accordance with SW 846, "Test Methods for Evaluating Solid Waste – Physical/Chemical Methods."

E. All TCLP test samples shall be analyzed for lead concentration using EPA Method 1311/6010 by the TCLP Testing Laboratory.

F. Submit results of TCLP tests to the Owner's authorized representative within 3 working days of collection, signed by the testing lab employee performing the analysis and the Contractor's Competent Person.

3.10 DISPOSAL

A. Disposal of Non-Hazardous Painted Construction Debris (TCLP for Lead Not Exceeding EPA Limit of 5.0 Milligrams per Liter):

1. Remove non-hazardous lead waste including debris, scraps, waste materials, rubbish, and trash from the site and dispose of such waste at a landfill approved for such purposes.

2. The Contractor shall submit to the Owner's authorized representative documentation that the lead-containing waste material removed from the work area has been accepted by the landfill owner.

B. Disposal of Hazardous Painted Construction Debris (TCLP for Lead Exceeding EPA Limit of 5.0 Milligrams per Liter):

1. Collect lead-contaminated wastes, scraps, debris and any other lead-contaminated materials and place in U.S. Department of Transportation approved and appropriately labeled containers.

2. Store lead wastes and debris in U.S. Department of Transportation approved containers in an interim storage area assigned by the Owner's authorized representative at the site. All hazardous wastes shall be removed from the site to an EPA approved disposal facility within 90 days of the removal work (as applicable).

3. Handle, store, transport, and dispose of lead or lead-contaminated waste in accordance with 40 CFR 260, 40 CFR 261, 40 CFR 262, 40 CFR 264, and 40 CFR 265. Comply with land disposal restriction notification requirements as required by 40 CFR 268.

4. The Contractor shall submit written evidence that the hazardous waste treatment, storage, or disposal facility (TSD) is approved for lead disposal by the EPA and State or local regulatory agencies. Submit one copy of the completed manifest, signed and dated by the initial transporter in accordance with 40 CFR 262 within 30 days of transport.

5. The Contractor shall complete the Hazardous Waste Disposal Log and the Project Hazardous Waste Log.

6. The Contractor shall submit disposal manifest and receipts showing acceptance of all waste material by the approval treatment or disposal facility within 30 days or disposal.

3.11 CERTIFICATION

A. The Contractor or his authorized representative shall certify in writing that the regions both inside and outside of the lead control area have airborne lead concentrations below the background level, that the respiratory protection for the employees was adequate, and that the work procedures were performed in accordance with 29 CFR 1926.62 and this Specification.

B. Upon inspection and approval of the area by the Owner's authorized representative, the Contractor shall certify that there were no visible accumulations of lead-contaminated paint, dust and debris remaining on the work-site.

C. The Contractor shall not remove the lead control area boundary and warning signs prior to the submittal and approval by the Owner's authorized representative of the Contractor's

certification that there were no visible accumulations of lead contaminated paint, dust and debris remaining on the work-site.

D. The Contractor shall re-clean areas showing residual paint chips, debris or wastes. Chips, debris and wastes shall be disposed of properly, in accordance with this Specification and all applicable Federal, State and local regulations.

3.12 MEASUREMENT AND PAYMENT

A. Payment for transportation and disposal of all lead-related wastes will not be measured and paid for separately, but shall be incidental to applicable items under renovation and removal work in the contract. The final payment will not be made until a signed copy of the manifest from the treatment or disposal facility certifying the amount of lead-contaminated material delivered is submitted to the Owner's authorized representative.

B. The Contractor shall provide and pay for all additional testing which may be required as a precondition of waste disposal, and these testing costs will be incidental to the lump sum price for renovation and removal work.

C. The Contractor shall submit 3 copies of an Abatement Report as specified in 40 CFR 745.227(10). Final payment shall not be made until the report is received and approved by the Owner's authorized representative. The report shall also include, but not be limited to, current and updated versions of the following as described in the Submittals section of this specification:

1. Waste Management Plan;
2. Laboratory Qualifications;
3. Manufacturer's Catalog Data;
4. Material Safety Data Sheets;
5. Rental Equipment Notification;
6. Lead-Based Paint Disturbance/Removal Plan;
7. Contractor's Competent Person Qualifications;
8. Employee EPA Lead Worker/Supervisor Certifications;
9. Personal Air Monitoring and TCLP Testing Results;
10. Log of Lead Disturbance Work;
11. Hazardous Waste Disposal Log;
12. Project Hazardous Waste Log;
13. Hazardous Waste Treatment or Disposal Facility Approval;

14. Waste Disposal Manifest Forms; and

15. Dump Receipts.

END OF SECTION