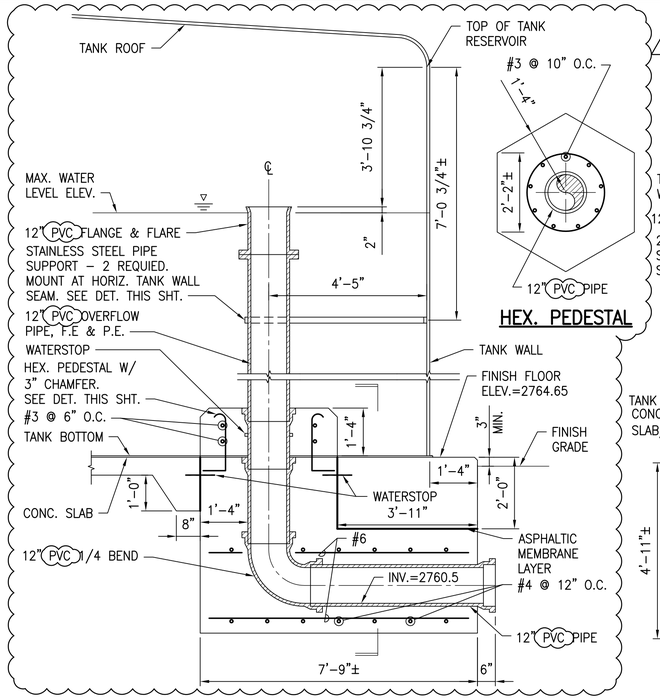

1 C-39 OVERFLOW LINE
1/2" = 1'-0"

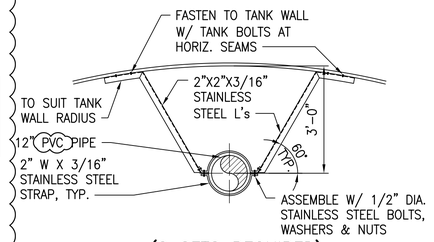

(2 SETS REQUIRED) OVERFLOW PIPE SUPPORT BRACKET

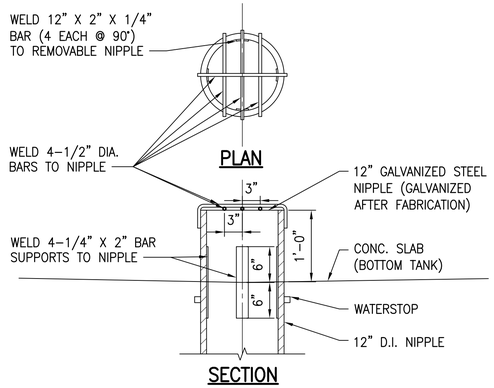

4 C-39 REMOVABLE OUTLET NIPPLE
NTS

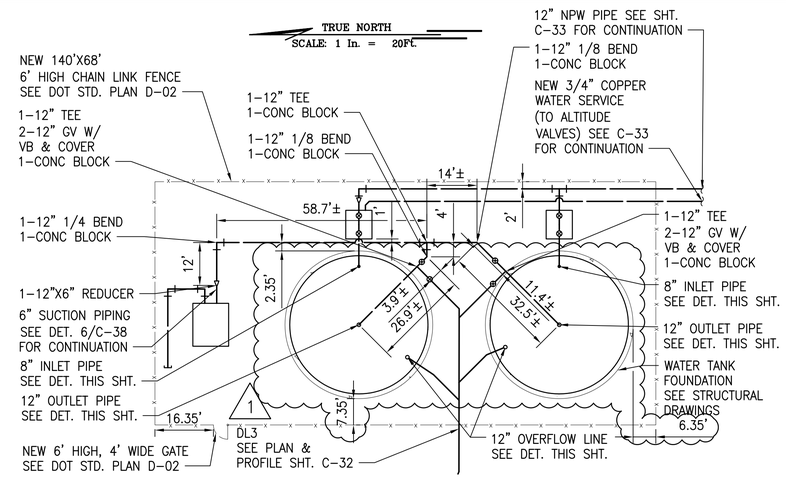

6 C-39 TANK AND BOOSTER PUMP STATION CONNECTION DETAIL
1" = 20'

NOTES:
1. ALL PIPES AND FITTINGS LABELED ON THIS DETAIL SHALL BE D.I.

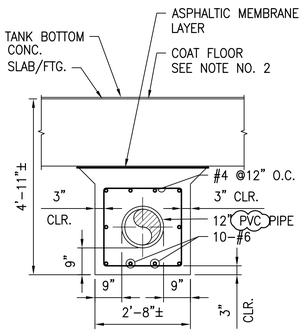

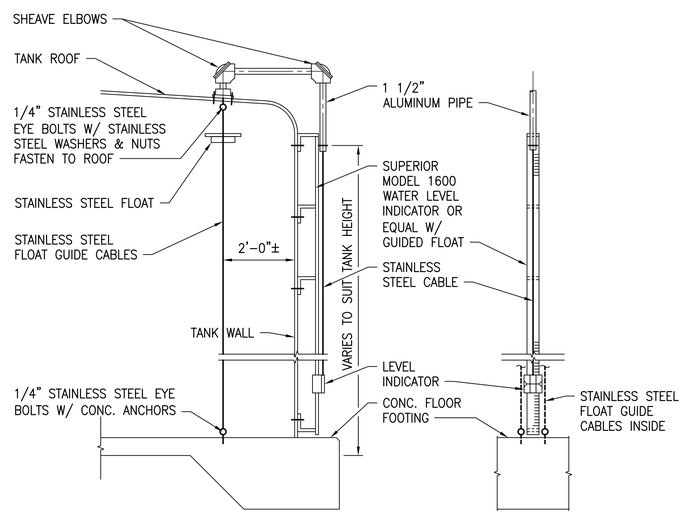

5 C-39 LIQUID LEVEL INDICATOR DETAILS
NTS

NOTES:
1. ORIENTATION OF PIPING AND APPURTENANCES SHALL BE PER CIVIL PLANS.
2. AFTER COMPLETION OF RESERVOIR, CLEAN CONC. FLOOR THOROUGHLY & APPLY SIKAGUARD 62 FLOOR SEALANT OR EQUAL.

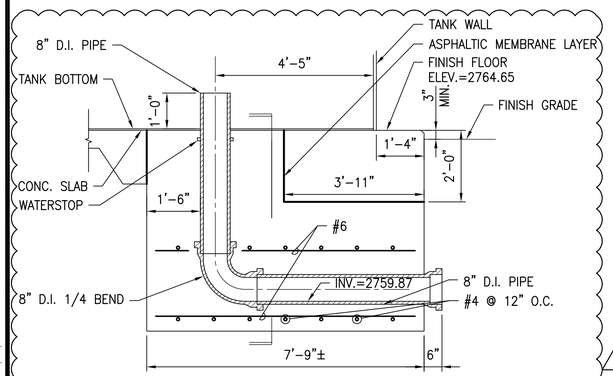

2 C-39 INLET LINE
1/2" = 1'-0"

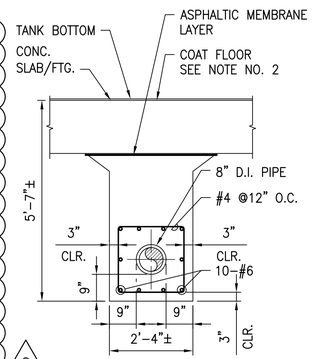

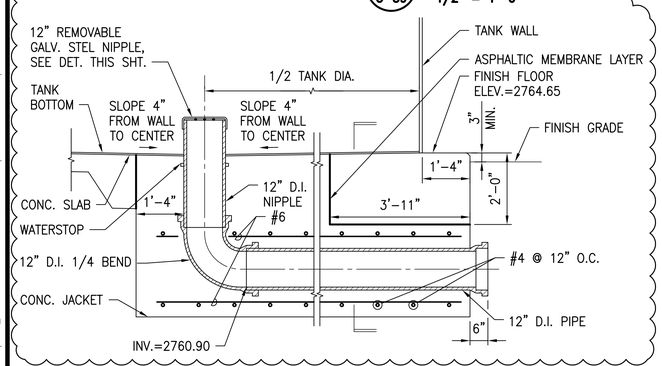

3 C-39 OUTLET LINE
1/2" = 1'-0"

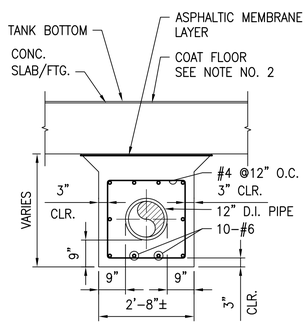

GRAPHICAL SCALE:

20' 10' 0 20' 40'
SCALE: 1" = 20'

1' 6" 0 1' 2' 3' 4' 5'
SCALE: 1/2" = 1'-0"

FINAL DESIGN SUBMITTAL

ROBYN R. MCKINNEY LICENSED PROFESSIONAL ENGINEER NO. 13480-C HAWAII, USA

4/30/2018
EXPIRATION DATE OF THE LICENSE

THIS WORK WAS PREPARED BY ME OR UNDER MY SUPERVISION AND CONSTRUCTION OF THIS PROJECT WILL BE UNDER MY OBSERVATION. (OBSERVATION OF CONSTRUCTION AS DEFINED IN CHAPTER 16-115, SUBCHAPTER 1 DEFINITIONS OF THE HAWAII ADMINISTRATIVE RULES, PROFESSIONAL ENGINEERS, ARCHITECTS, SURVEYORS, AND LANDSCAPE ARCHITECTS)

NOTE: CONTRACTOR TO CHECK AND VERIFY DIMENSIONS AT JOB BEFORE PROCEEDING WITH WORK.

REVISION	DATE	DESCRIPTION	MADE BY	APPROVED
2	6/20/16	CHANGED OVERFLOW PIPE FROM D.I. TO PVC. REVISED PIPE DETAILS	MGC	
1	5/24/16	UPDATED WATER TANK FOUNDATION LAYOUT	KAS	

SSFM International
SSFM INTERNATIONAL, INC.
99 Aupuni Street, Suite 202
Hilo, Hawaii 96720

WAIMEA HOMESTEAD COMMUNITY AGRICULTURAL PARK

PU'UKAPU, WAIMEA, SOUTH KOHALA, HAWAII ISLAND
OWNER AND DEVELOPER: DEPARTMENT OF HAWAIIAN HOME LANDS
MANAGED BY: DEPARTMENT OF AGRICULTURE
PROJECT NO. DOAH18
TAX MAP KEY: (3) 6-4-038:011 (POR.)

CIVIL DETAILS - 5

DRAWN BY: KAS, MGC	ENGINEER: RM	CHECKED BY: AWD
APPROVED:		

W:_CIVIL 3D PROJECTS\2015_071.000 DA WAIMEA NUI AGRI PARK\01 CIVIL DRAWINGS\C-39 CIVIL DETAILS 5.DWG 6/20/2016 3:59 PM MCORONADO

FILE	POCKET	FOLDER	NO.