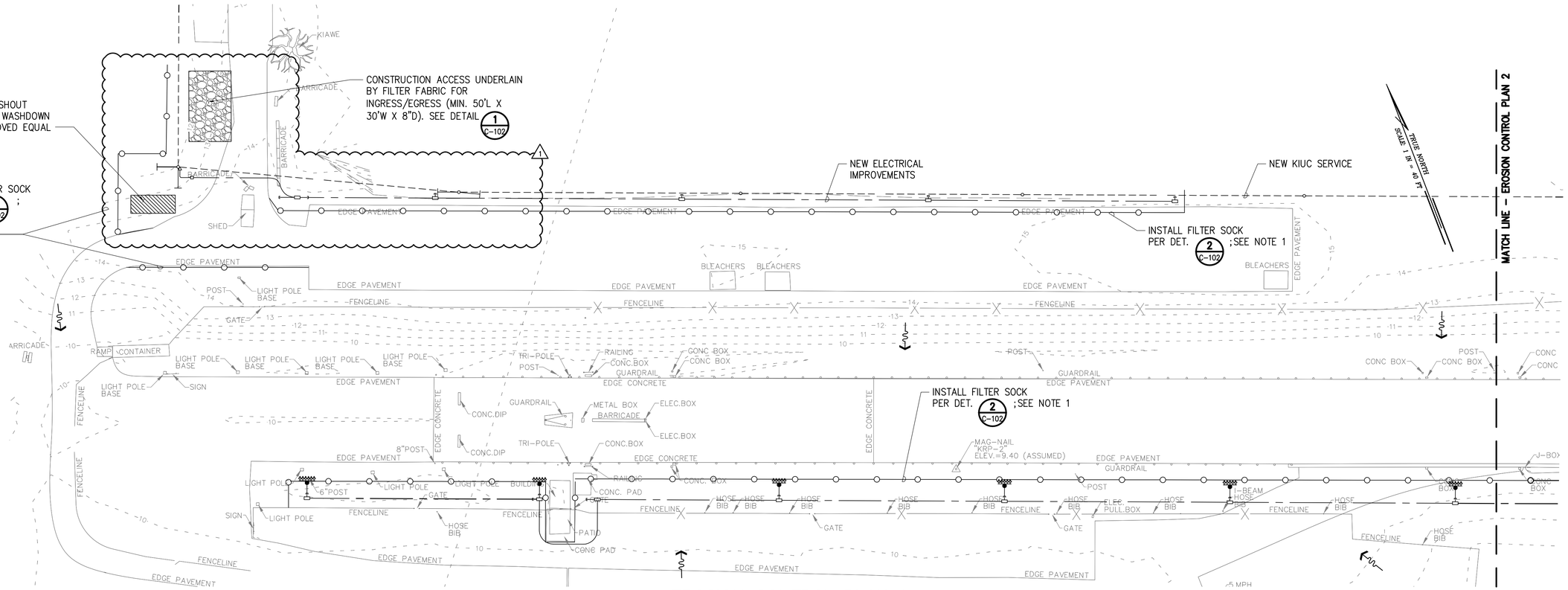

EROSION CONTROL PLAN 1

SCALE: 1"=40'

LEGEND

- FILTER SOCK
- CONCRETE WASHDOWN BIN
- CONSTRUCTION ACCESS
- FLOW DIRECTION

NOTES:

1. THE CONTRACTOR SHALL INSTALL TEMPORARY FILTER SOCKS AS SHOWN ON PLAN AROUND THE AREA OF WORK AWARDED/ANTICIPATED AND AS DIRECTED BY THE ENGINEER.

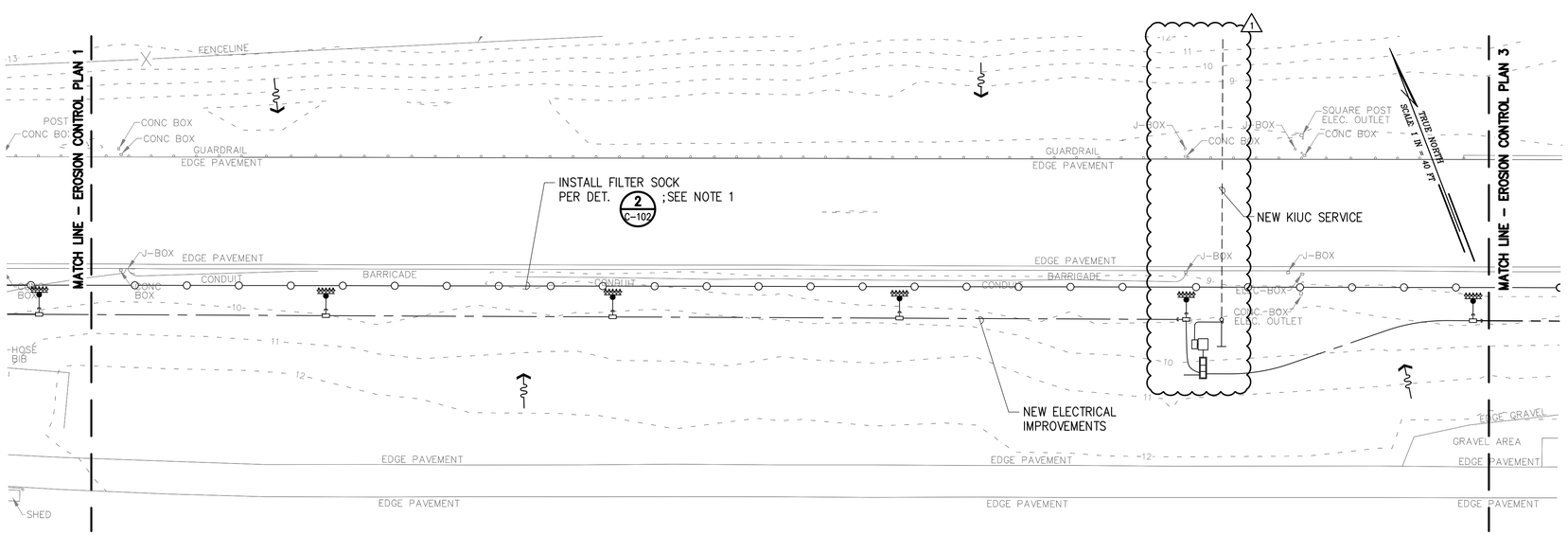

EROSION CONTROL PLAN 2

SCALE: 1"=40'

GRAPHIC SCALE

40 0 20 40 80 160

(IN FEET)
1 inch = 40 ft.

REVISION NO.	SYM.	DESCRIPTION	SHT./OF	DATE	APPROVED
	1	REVISED KIUC, ELECTRICAL, AND BMP LOCATION		5-11-16	

KYLE H. KANESHIRO
LICENSED PROFESSIONAL ENGINEER
No. 10268-C
HAWAII, U.S.A.

EXP. DATE 4/30/18

THIS WORK WAS PREPARED BY ME OR UNDER MY SUPERVISION AND CONSTRUCTION OF THIS PROJECT WILL BE UNDER MY OBSERVATION.

STATE OF HAWAI'I
DEPARTMENT OF LAND AND NATURAL RESOURCES
ENGINEERING DIVISION

MĀNĀ DRAG RACING STRIP IMPROVEMENTS PAHSE 2
ELECTRICAL UPGRADES
KAUA'I, HAWAI'I

EROSION CONTROL PLAN 1 & 2

DESIGNED:	JN	SUBMITTED:	
DRAWN:	JN	DATE:	APRIL 2016
CHECKED:	KHK	SCALE:	AS SHOWN

APPROVED: _____ CHIEF ENGINEER _____ DATE

DRAWING NO. C-101

L:\1 PROJECTS\63 - DLNR\16307 - Mana Elect Imp\DRAWING\EROSION CONTROL.dwg - 5/13/2016 9:34 AM

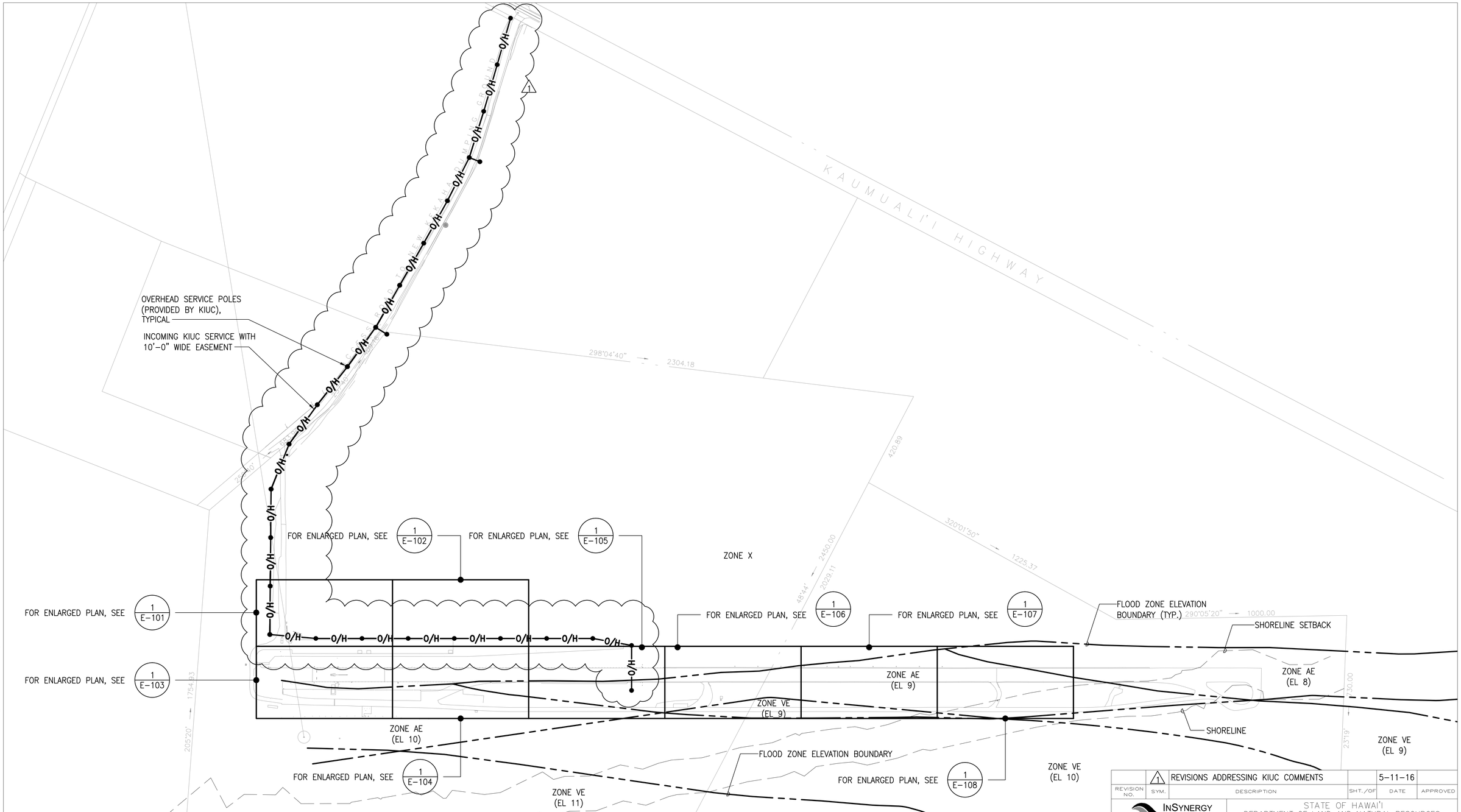

1 E-100 **OVERALL SITE PLAN**
SCALE: 1"=200'-0"

REVISION NO.	SYM.	DESCRIPTION	SHT./OF	DATE	APPROVED
	1	REVISIONS ADDRESSING KIUC COMMENTS		5-11-16	

InSynergy Engineering
MECHANICAL ★ ELECTRICAL ★ FIRE PROTECTION
829 Fort Street Mall Suite 500, Honolulu, Hawaii 96813
Phone: (808) 521-0773 Fax: (808) 521-0863

GARRET A. MASUDA
LICENSED PROFESSIONAL ENGINEER
No. 9756-E
HAWAII, U.S.A.
EXP. 04-30-2018

THIS WORK WAS PREPARED BY ME OR UNDER MY SUPERVISION AND CONSTRUCTION OF THIS PROJECT WILL BE UNDER MY OBSERVATION

STATE OF HAWAI'I
DEPARTMENT OF LAND AND NATURAL RESOURCES
ENGINEERING DIVISION

MĀNĀ DRAG RACING STRIP IMPROVEMENTS PHASE 2
ELECTRICAL UPGRADES
KAUA'I, HAWAI'I

OVERALL SITE PLAN

DESIGNED:	KH	SUBMITTED:	
DRAWN:	KH	DATE:	APRIL 2016
CHECKED:	GM	SCALE:	AS SHOWN

APPROVED: _____ CHIEF ENGINEER _____ DATE

DRAWING NO. E-100

JOB NO. 500CK30B SHEET NO. 8A OF 30 SHEETS

Z:\#Projects (numbered)\2013\13072\Drawing Files\Electrical\3g2_e0010-E100.dwg - 5/11/2016 11:29 AM

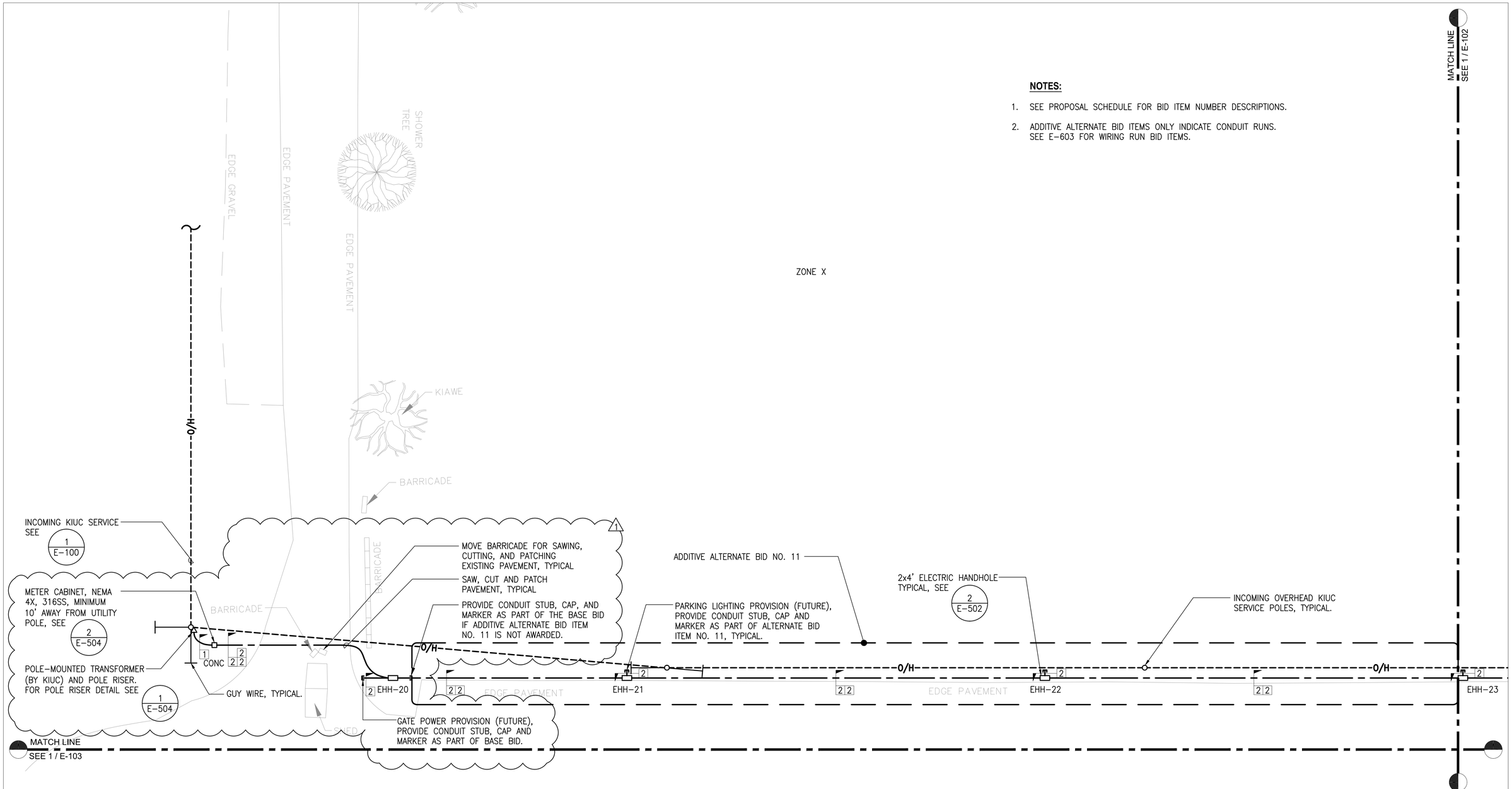

NOTES:

1. SEE PROPOSAL SCHEDULE FOR BID ITEM NUMBER DESCRIPTIONS.
2. ADDITIVE ALTERNATE BID ITEMS ONLY INDICATE CONDUIT RUNS. SEE E-603 FOR WIRING RUN BID ITEMS.

1 / E-101 ENLARGED ELECTRICAL PLAN - 1

SCALE: 1"=20'-0"

0 10' 20' 30' 40' 50' 60'

SCALE: 1" = 20'

REVISION NO.	SYM.	DESCRIPTION	SHT./OF	DATE	APPROVED
	1	REVISIONS ADDRESSING KIUC COMMENTS		5-11-16	

InSynergy Engineering
MECHANICAL ▲ ELECTRICAL ▲ FIRE PROTECTION
828 Fort Street Mall Suite 500, Honolulu, Hawaii 96813
Phone: (808) 521-3773 Fax: (808) 521-3963

GARRET A. MASUDA
LICENSED PROFESSIONAL ENGINEER
No. 9756-E
HAWAII, U.S.A.

EXP. 04-30-2018

THIS WORK WAS PREPARED BY ME OR UNDER MY SUPERVISION AND CONSTRUCTION OF THIS PROJECT WILL BE UNDER MY OBSERVATION

STATE OF HAWAI'I
DEPARTMENT OF LAND AND NATURAL RESOURCES
ENGINEERING DIVISION

MĀNĀ DRAG RACING STRIP IMPROVEMENTS PHASE 2
ELECTRICAL UPGRADES
KAUA'I, HAWAI'I

ENLARGED ELECTRICAL PLAN – 1

DESIGNED:	KH	SUBMITTED:	
DRAWN:	KH	DATE:	APRIL 2016
CHECKED:	GM	SCALE:	AS SHOWN

APPROVED: CHIEF ENGINEER DATE

DRAWING NO. E-101

Z:\#Projects (numbered)\2013\13072\Drawing Files\Electrical\3g2_e0010-E101.dwg - 5/13/2016 8:01 AM

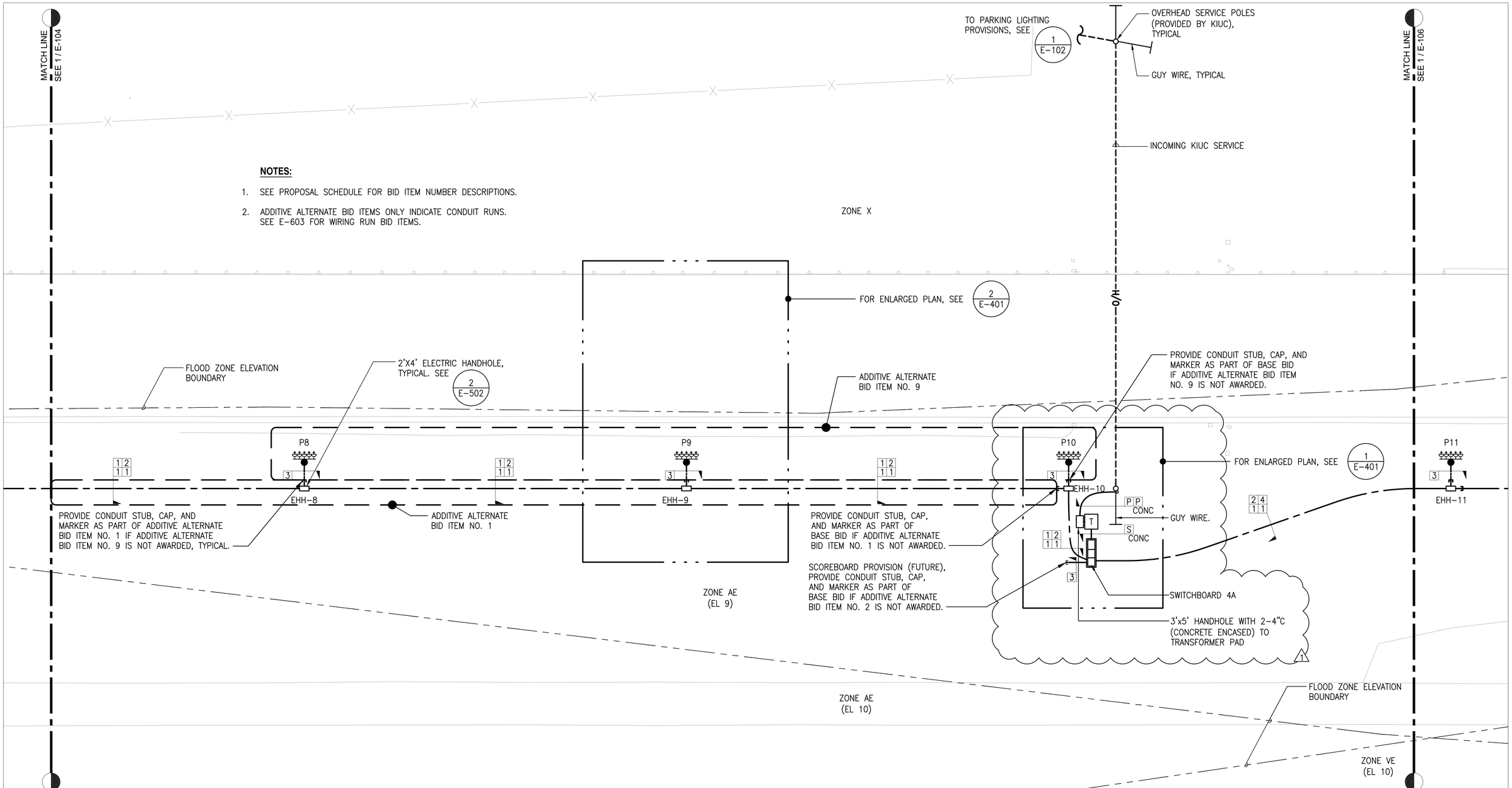

NOTES:

1. SEE PROPOSAL SCHEDULE FOR BID ITEM NUMBER DESCRIPTIONS.
2. ADDITIVE ALTERNATE BID ITEMS ONLY INDICATE CONDUIT RUNS. SEE E-603 FOR WIRING RUN BID ITEMS.

1 / E-105 ENLARGED ELECTRICAL PLAN - 5

SCALE: 1"=20'-0"

N

0 10' 20' 30' 40' 50' 60'

SCALE: 1" = 20'

REVISION NO.	SYM.	DESCRIPTION	SHT./OF	DATE	APPROVED
	1	REVISIONS ADDRESSING KIUC COMMENTS		5-11-16	

InSynergy Engineering
MECHANICAL ▲ ELECTRICAL ▲ FIRE PROTECTION
828 Fort Street Mall Suite 500, Honolulu, Hawaii 96813
Phone: (808) 521-2372 Fax: (808) 521-0863

GARRET A. MASUDA
LICENSED PROFESSIONAL ENGINEER
No. 9756-E
HAWAII, U.S.A.

EXP. 04-30-2018

THIS WORK WAS PREPARED BY ME OR UNDER MY SUPERVISION AND CONSTRUCTION OF THIS PROJECT WILL BE UNDER MY OBSERVATION

STATE OF HAWAI'I
DEPARTMENT OF LAND AND NATURAL RESOURCES
ENGINEERING DIVISION

MĀNĀ DRAG RACING STRIP IMPROVEMENTS PHASE 2
ELECTRICAL UPGRADES
KAUA'I, HAWAI'I

ENLARGED ELECTRICAL PLAN – 5

DESIGNED:	KH	SUBMITTED:	
DRAWN:	KH	DATE:	APRIL 2016
CHECKED:	GM	SCALE:	AS SHOWN
APPROVED: CHIEF ENGINEER		DATE	DRAWING NO. E-105

Z:\#Projects (numbered)\2013\13072\Drawing Files\Electrical\3g2_e0010-E105.dwg - 5/13/2016 8:01 AM

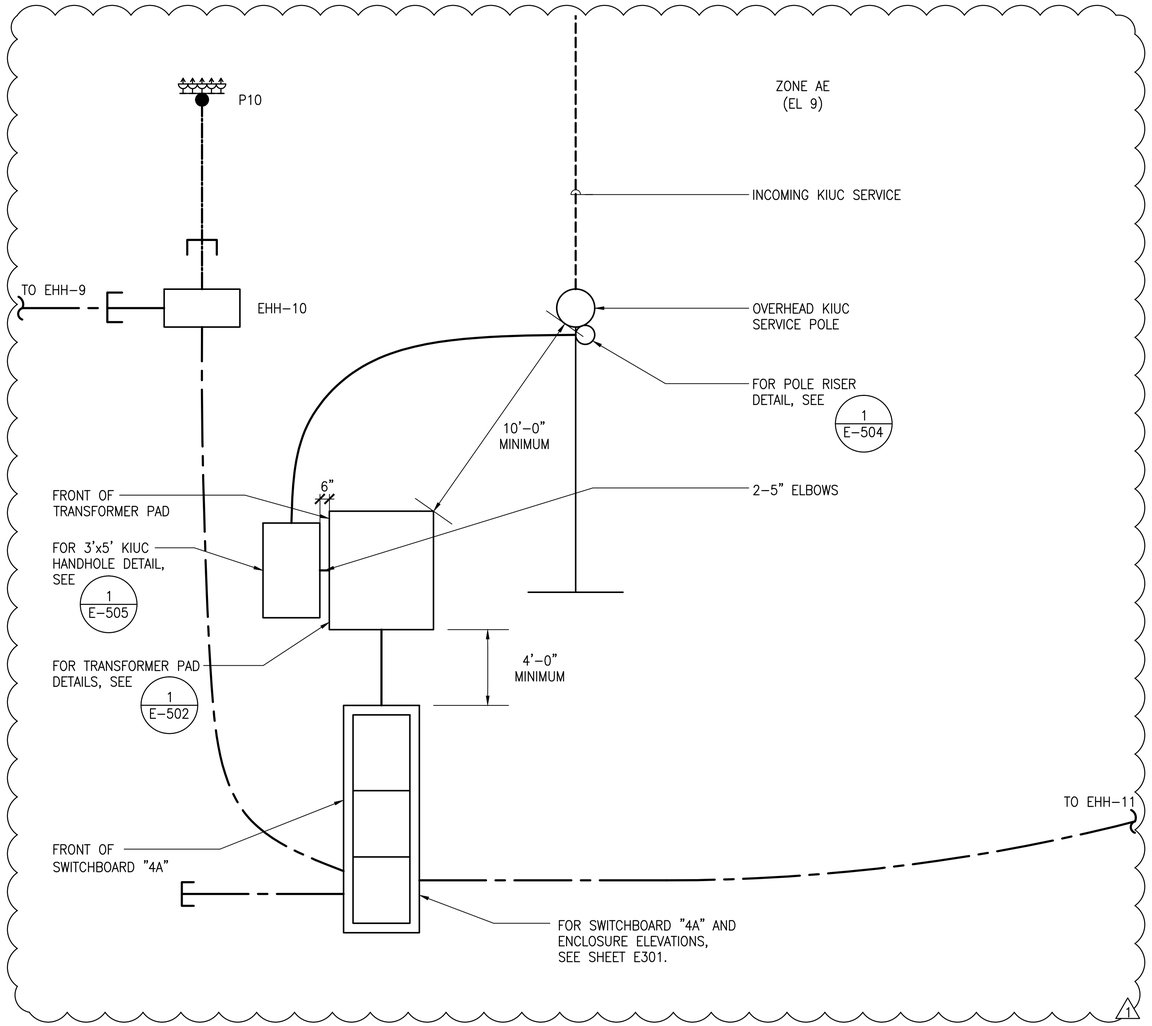

1 E-401 ELECTRICAL EQUIPMENT LAYOUT

SCALE: 1/4"=1'-0"

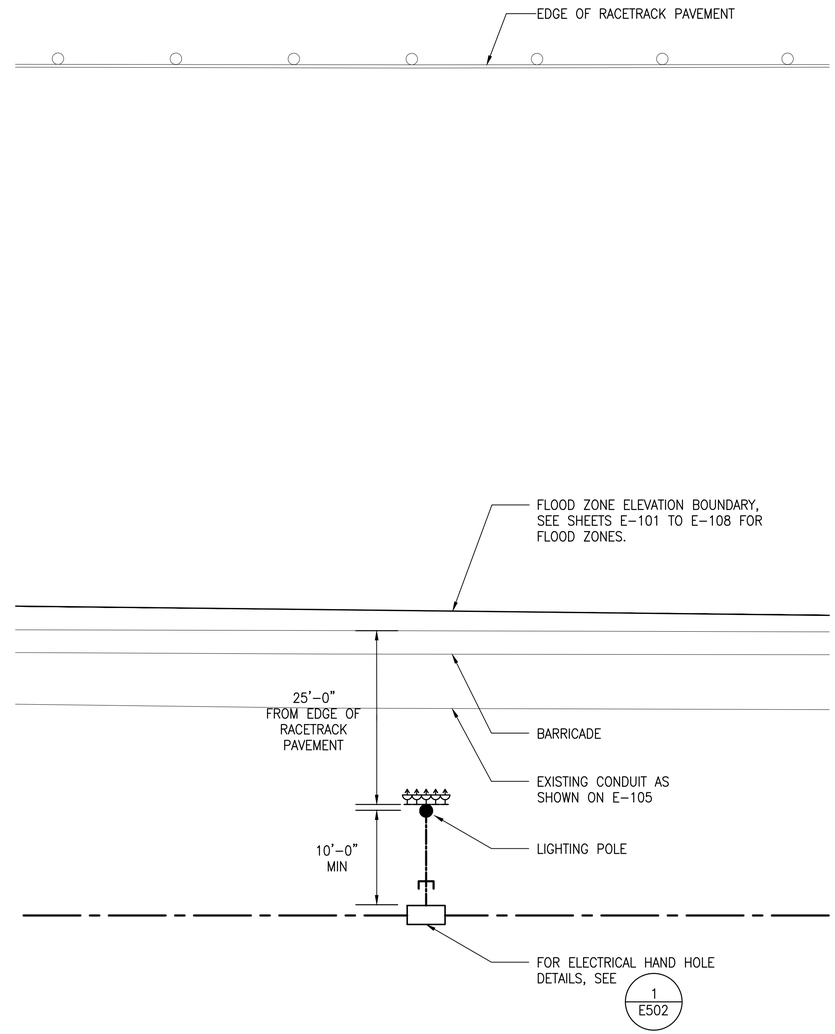

2 E-401 ENLARGED TYPICAL LIGHT POLE LAYOUT

SCALE: 1/8"=1'-0"

N

0 2' 4' 6' 8' 10' 12'
SCALE: 1/4" = 1'-0"

0 4' 8' 12' 16' 20' 24'
SCALE: 1/8" = 1'-0"

REVISION NO.	SYM.	DESCRIPTION	SHT./OF	DATE	APPROVED
	1	REVISIONS ADDRESSING KIUC COMMENTS		5-11-16	

InSynergy Engineering
MECHANICAL ▲ ELECTRICAL ▲ FIRE PROTECTION
828 Fort Street Mall Suite 500, Honolulu, Hawaii 96813
Phone: (808) 521-2772 Fax: (808) 521-0863

GARRET A. MASUDA
LICENSED PROFESSIONAL ENGINEER
No. 9756-E
HAWAII, U.S.A.
EXP. 04-30-2018

THIS WORK WAS PREPARED BY ME OR UNDER MY SUPERVISION AND CONSTRUCTION OF THIS PROJECT WILL BE UNDER MY OBSERVATION

STATE OF HAWAI'I
DEPARTMENT OF LAND AND NATURAL RESOURCES
ENGINEERING DIVISION

MĀNĀ DRAG RACING STRIP IMPROVEMENTS PHASE 2
ELECTRICAL UPGRADES
KAUA'I, HAWAI'I

ENLARGED ELECTRICAL PLANS

DESIGNED:	KH	SUBMITTED:	
DRAWN:	KH	DATE:	APRIL 2016
CHECKED:	GM	SCALE:	AS SHOWN
APPROVED:		DRAWING NO.	E-401
CHIEF ENGINEER		DATE	

Z:\#Projects (numbered)\2013\13072\Drawing Files\Electrical\3g2_e0010-E401.dwg - 5/11/2016 1:28 PM

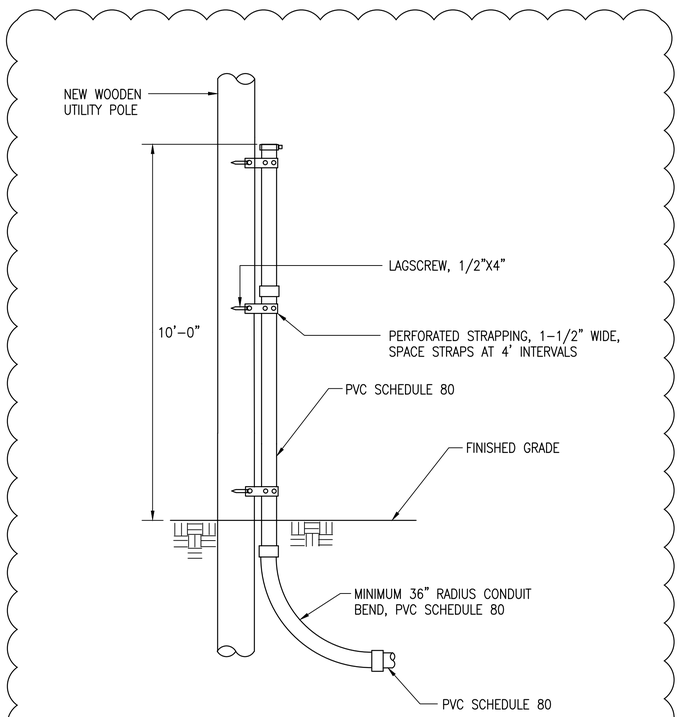

NOTES:

1. CONTRACTOR SHALL COORDINATE REQUIREMENTS WITH KIUC.
2. SEE ONE LINE DIAGRAMS FOR RISER POLE SIZE.

1 / E-504 **RISER POLE DETAIL**
NOT TO SCALE

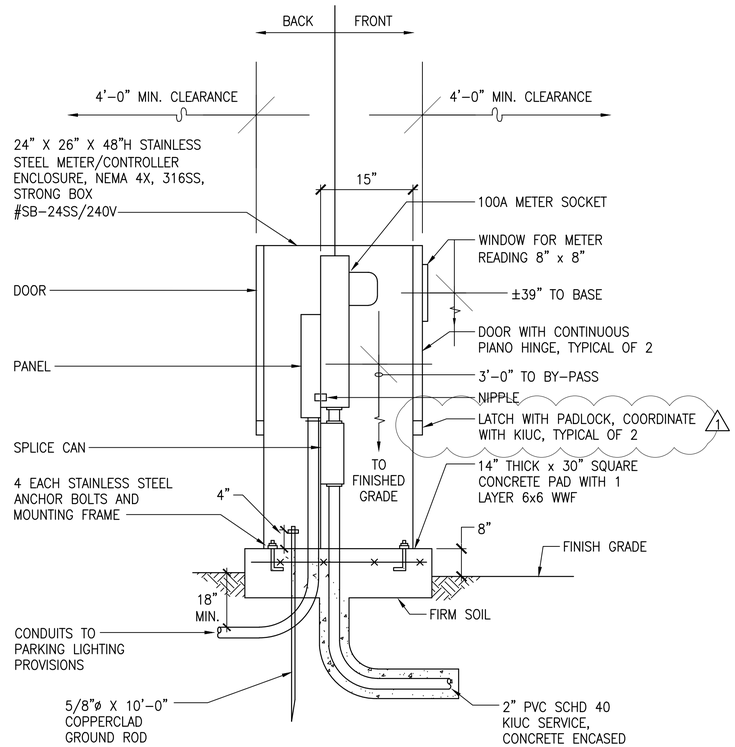

NOTES:

1. CONTRACTOR SHALL SUBMIT SHOP DRAWINGS FOR APPROVAL BY THE ENGINEER AND KIUC PRIOR TO ORDERING ANY EQUIPMENT.
2. A KIUC PURCHASED KEY BOX WITH KEY IS REQUIRED TO BE MOUNTED ON CABINET FOR KIUC'S ACCESS TO METER.

2 / E-504 **METER CABINET DETAIL**
NOT TO SCALE

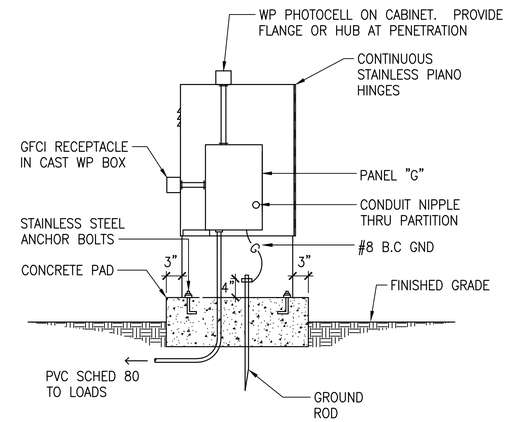

BACK ELEVATION
SCALE: 3/4" = 1'-0"

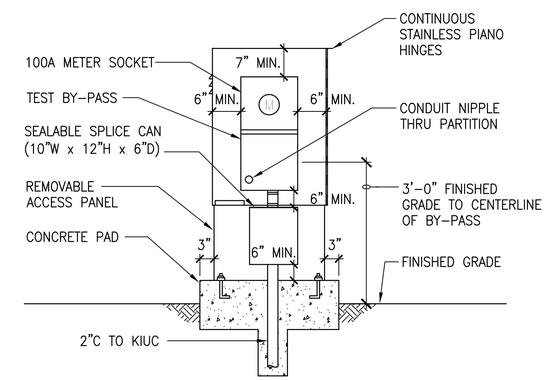

FRONT ELEVATION
SCALE: 3/4" = 1'-0"

REVISION NO.	SYM.	DESCRIPTION	SHT./OF	DATE	APPROVED
	1	REVISIONS ADDRESSING KIUC COMMENTS		5-11-16	

InSynergy Engineering
MECHANICAL ▲ ELECTRICAL ▲ FIRE PROTECTION
828 Fort Street Mall Suite 500, Honolulu, Hawaii 96813
Phone: (808) 521-0773 Fax: (808) 521-0983

GARRET A. MASUDA
LICENSED PROFESSIONAL ENGINEER
No. 9756-E
HAWAII, U.S.A.
EXP. 04-30-2018

THIS WORK WAS PREPARED BY ME OR UNDER MY SUPERVISION AND CONSTRUCTION OF THIS PROJECT WILL BE UNDER MY OBSERVATION

STATE OF HAWAI'I
DEPARTMENT OF LAND AND NATURAL RESOURCES
ENGINEERING DIVISION

MĀNĀ DRAG RACING STRIP IMPROVEMENTS PHASE 2
ELECTRICAL UPGRADES
KAUA'I, HAWAI'I

METER ENCLOSURE AND RISER DETAILS

DESIGNED:	KH	SUBMITTED:	
DRAWN:	KH	DATE:	APRIL 2016
CHECKED:	GM	SCALE:	AS SHOWN
APPROVED:		DRAWING NO.	E-504

CHIEF ENGINEER DATE

Z:\#Projects (numbered)\2013\13072\Drawing Files\Electrical\3g2_e0010-E504.dwg - 5/11/2016 1:29 PM

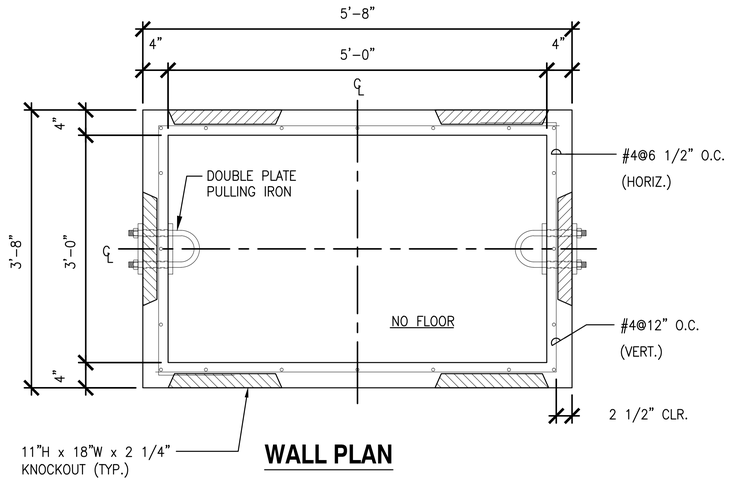

WALL PLAN

NOT TO SCALE

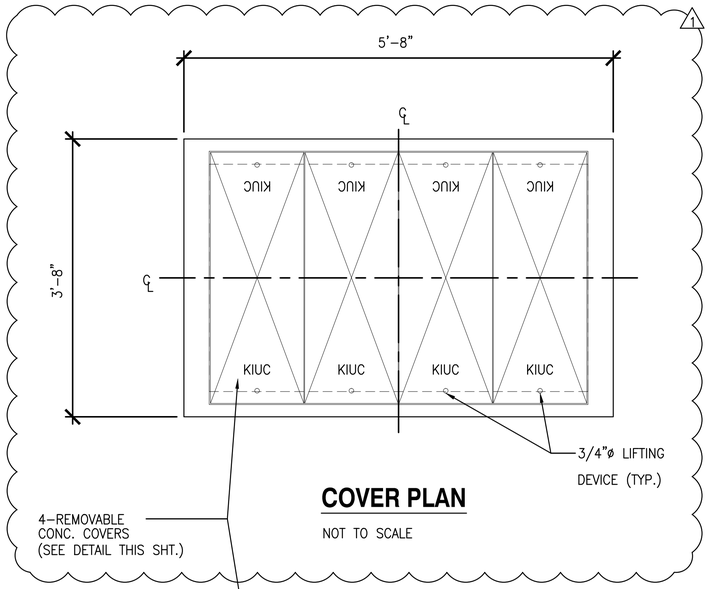

COVER PLAN

NOT TO SCALE

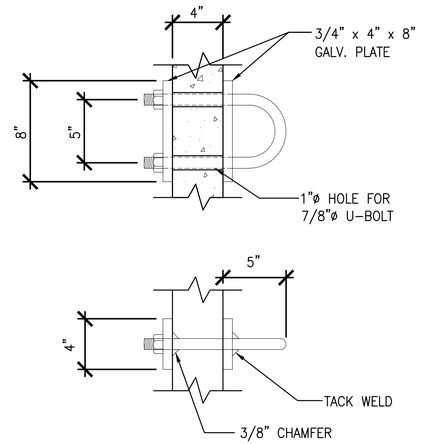

PULLING IRON DETAILS

NOT TO SCALE

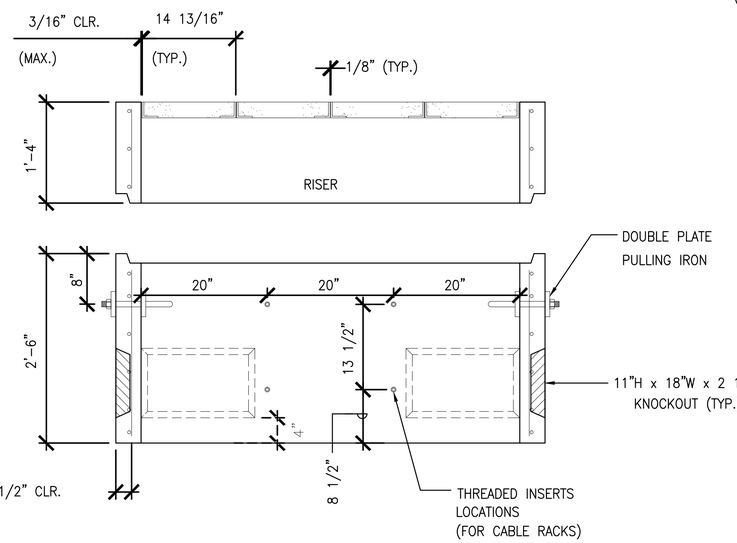

SECTION "A-A"

NOT TO SCALE

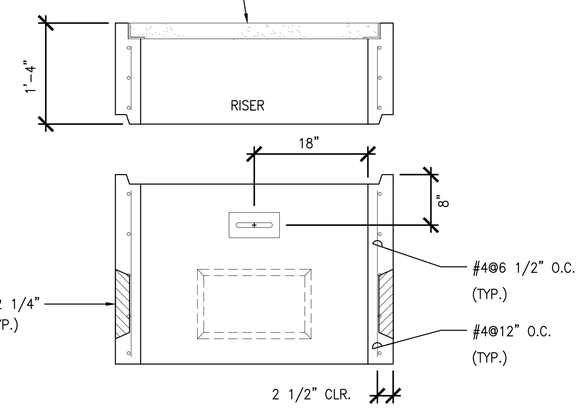

SECTION "B-B"

NOT TO SCALE

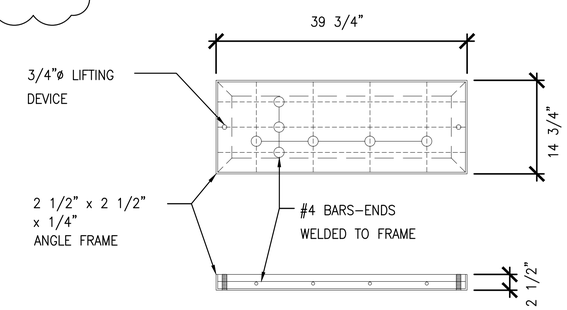

PULLING IRON DETAILS

NOT TO SCALE

1 / E505 **3'-0" X 5'-0" KIUC HANDHOLE**

NOT TO SCALE

REVISION NO.	SYM.	DESCRIPTION	SHT./OF	DATE	APPROVED
	1	REVISIONS ADDRESSING KIUC COMMENTS		5-11-16	

INSYNERGY ENGINEERING
MECHANICAL ▲ ELECTRICAL ▲ FIRE PROTECTION
929 Fort Street Mall Suite 500, Honolulu, Hawaii 96813
Phone: (808) 521-2773 Fax: (808) 521-2883

GARRET A. MASUDA
LICENSED PROFESSIONAL ENGINEER
No. 9756-E
HAWAII, U.S.A.

EXP. 04-30-2018

THIS WORK WAS PREPARED BY ME OR UNDER MY SUPERVISION AND CONSTRUCTION OF THIS PROJECT WILL BE UNDER MY OBSERVATION

STATE OF HAWAI'I
DEPARTMENT OF LAND AND NATURAL RESOURCES
ENGINEERING DIVISION

MĀNĀ DRAG RACING STRIP IMPROVEMENTS PHASE 2
ELECTRICAL UPGRADES
KAUA'I, HAWAI'I

3'-0" X 5'-0" KIUC
HANDHOLE DETAILS

DESIGNED:	KH	SUBMITTED:	
DRAWN:	KH	DATE:	APRIL 2016
CHECKED:	GM	SCALE:	AS SHOWN

APPROVED: _____ CHIEF ENGINEER _____ DATE

DRAWING NO. E-505

Z:\#Projects (numbered)\2013\13072\Drawing Files\Electrical\3g2_e0010-E505.dwg - 5/11/2016 1:29 PM

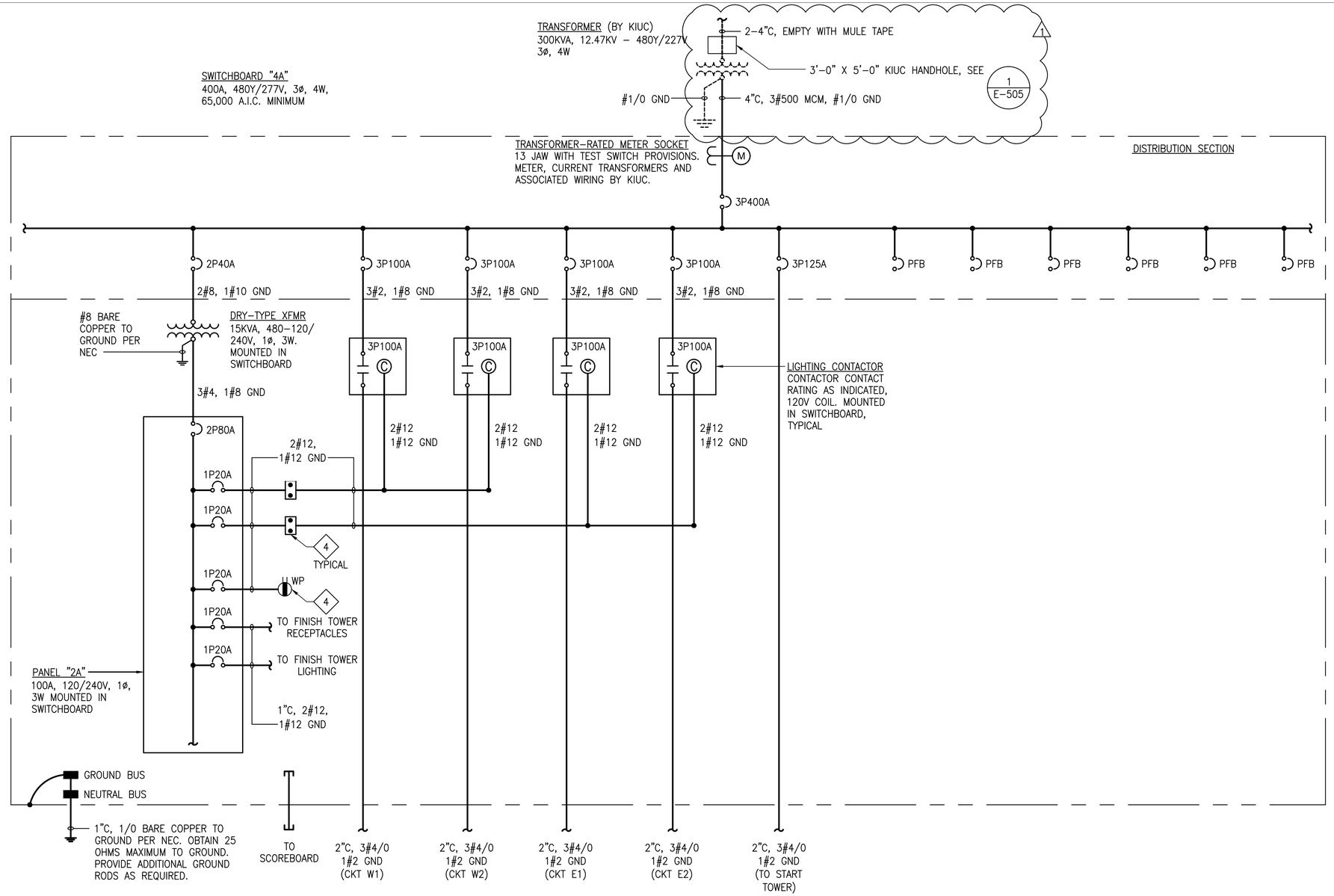

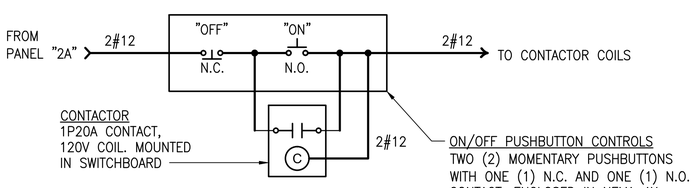

2 / E601 PUSH-BUTTON CONTROLS WIRING DIAGRAM

NOT TO SCALE

1 / E601 SWITCHBOARD 4A ONE-LINE DIAGRAM - NEW WORK

NOT TO SCALE

NOTES:

1. PROVIDE LABELLING FOR EACH CIRCUIT BREAKER, PANELBOARD, LIGHTING CONTACTOR AND ON/OFF PUSHBUTTON CONTROLS. LABELLING SHALL CONSIST OF A 0.125 INCH THICK BLACK LAMINATED PLASTIC PLATE WITH WHITE CORE. ENGRAVE MINIMUM 0.25 INCH HIGH LETTERING IN PLATE TO EXPOSE WHITE CORE. SECURE LABEL TO SWITCHBOARD WITH STAINLESS STEEL FASTENERS.
2. PROVIDE TYPEWRITTEN DIRECTORIES FOR BREAKERS LOCATED IN PANELBOARD.
3. FOR CONTINUATION OF CIRCUITS, SEE SWITCHBOARD 4A DISTRIBUTION DIAGRAM ON SHEET E–602.

◇4 MOUNT DEVICE ON EXTERIOR OF SWITCHBOARD.

REVISION NO.	SYM.	DESCRIPTION	SHT./OF	DATE	APPROVED
	1	REVISIONS ADDRESSING KIUC COMMENTS		5–11–16	

INSYNERGY ENGINEERING
MECHANICAL ▲ ELECTRICAL ▲ FIRE PROTECTION
928 Fort Street Mall Suite 500, Honolulu, Hawaii 96813
Phone: (808) 521-0773 – Fax: (808) 521-3993

GARRET A. MASUDA
LICENSED PROFESSIONAL ENGINEER
No. 9756-E
HAWAII, U.S.A.
EXP. 04–30–2018

THIS WORK WAS PREPARED BY ME OR UNDER MY SUPERVISION AND CONSTRUCTION OF THIS PROJECT WILL BE UNDER MY OBSERVATION

STATE OF HAWAI'I
DEPARTMENT OF LAND AND NATURAL RESOURCES
ENGINEERING DIVISION

MĀNĀ DRAG RACING STRIP IMPROVEMENTS PHASE 2
ELECTRICAL UPGRADES
KAUA'I, HAWAI'I

SWITCHBOARD ONE–LINE DIAGRAM

DESIGNED:	KH	SUBMITTED:	
DRAWN:	KH	DATE:	APRIL 2016
CHECKED:	GM	SCALE:	AS SHOWN
APPROVED:		DRAWING NO.	E–601
CHIEF ENGINEER		DATE	

Z:\#Projects (numbered)\2013\13072\Drawing Files\Electrical\3g2_e0010-E601.dwg - 5/11/2016 1:29 PM

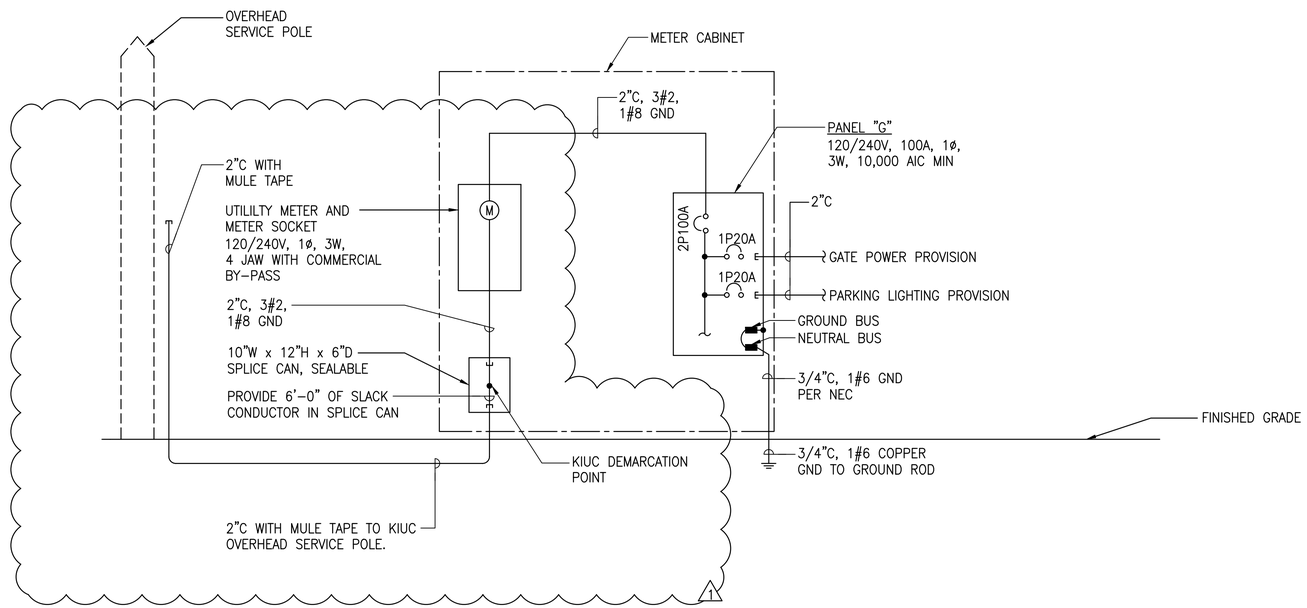

1
E602

METER CABINET ONE-LINE DIAGRAM

NOT TO SCALE

REVISION NO.	SYM.	DESCRIPTION	SHT./OF	DATE	APPROVED
	1	REVISIONS ADDRESSING KIUC COMMENTS		5-11-16	

INSYNERGY ENGINEERING
MECHANICAL ▲ ELECTRICAL ▲ FIRE PROTECTION
828 Fort Street Mall Suite 500, Honolulu, Hawaii 96813
Phone: (808) 521-2773 Fax: (808) 521-0860

GARRET A. MASUDA
LICENSED PROFESSIONAL ENGINEER
No. 9756-E
HAWAII, U.S.A.

EXP. 04-30-2018

THIS WORK WAS PREPARED BY ME OR UNDER MY SUPERVISION AND CONSTRUCTION OF THIS PROJECT WILL BE UNDER MY OBSERVATION

STATE OF HAWAI'I
DEPARTMENT OF LAND AND NATURAL RESOURCES
ENGINEERING DIVISION

MĀNĀ DRAG RACING STRIP IMPROVEMENTS PHASE 2
ELECTRICAL UPGRADES
KAUA'I, HAWAI'I

METER CABINET ONE-LINE DIAGRAM

DESIGNED:	KH	SUBMITTED:	
DRAWN:	KH	DATE:	APRIL 2016
CHECKED:	GM	SCALE:	AS SHOWN
APPROVED:			DRAWING NO.
CHIEF ENGINEER		DATE	E-602

Z:\#Projects (numbered)\2013\13072\Drawing Files\Electrical\3g2_e0010-E602.dwg - 5/11/2016 1:30 PM

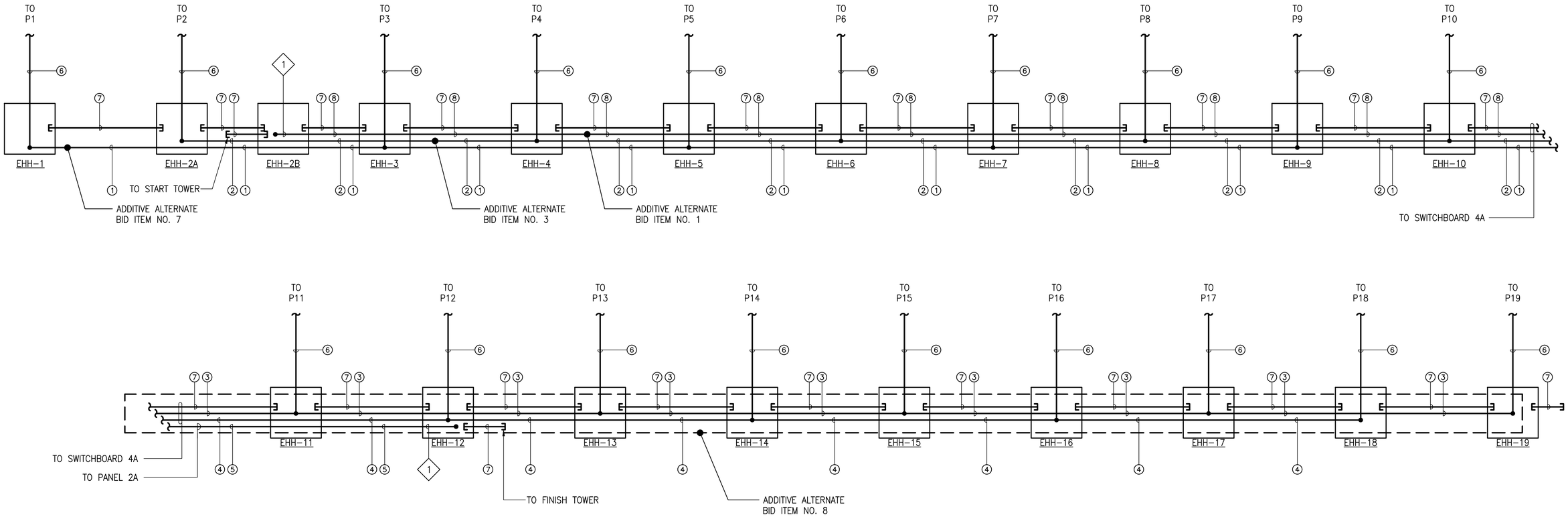

1 / E603 **SWITCHBOARD 4A DISTRIBUTION DIAGRAM**
NOT TO SCALE

NOTES:

1. COIL 10' OF SLACK CONDUCTOR INSIDE HANDHOLE.
2. ADDITIVE ALTERNATE BID ITEMS ONLY INDICATE WIRING RUNS. SEE E-101 TO E-108 FOR CONDUIT RUN BID ITEMS.

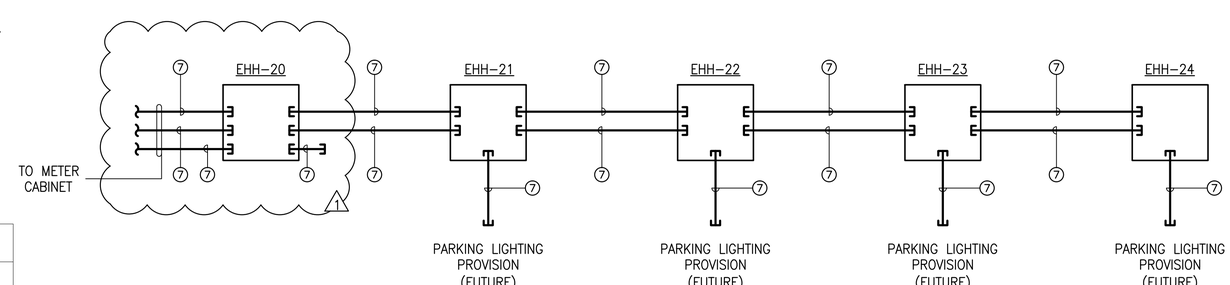

2 / E603 **SPECTATOR AREA DISTRIBUTION DIAGRAM**
NOT TO SCALE

SYMBOL LEGEND

1	CIRCUIT W1
2	CIRCUIT W2
3	CIRCUIT E1
4	CIRCUIT E2
5	FINISH TOWER
6	(1) 1 1/2"C, 3#3, 1#8 GND
7	(1) 2"C WITH PULLSTRING
8	START TOWER
9	NOT USED.
10	NOT USED.

REVISION NO.	SYM.	DESCRIPTION	SHT./OF	DATE	APPROVED
	1	REVISIONS ADDRESSING KIUC COMMENTS		5-11-16	

InSynergy Engineering
MECHANICAL ▲ ELECTRICAL ▲ FIRE PROTECTION
828 Fort Street Mall Suite 300, Honolulu, Hawaii 96813
Phone: (808) 521-0773 Fax: (808) 521-0883

GARRET A. MASUDA
LICENSED PROFESSIONAL ENGINEER
No. 9756-E
HAWAII, U.S.A.
EXP. 04-30-2018

THIS WORK WAS PREPARED BY ME OR UNDER MY SUPERVISION AND CONSTRUCTION OF THIS PROJECT WILL BE UNDER MY OBSERVATION

STATE OF HAWAI'I
DEPARTMENT OF LAND AND NATURAL RESOURCES
ENGINEERING DIVISION

MĀNĀ DRAG RACING STRIP IMPROVEMENTS PHASE 2
ELECTRICAL UPGRADES
KAUA'I, HAWAI'I

DISTRIBUTION DIAGRAM

DESIGNED:	KH	SUBMITTED:	
DRAWN:	KH	DATE:	APRIL 2016
CHECKED:	GM	SCALE:	AS SHOWN
APPROVED:			DRAWING NO.
CHIEF ENGINEER		DATE	E-603

Z:\#Projects (numbered)\2013\13072\Drawing Files\Electrical\3g2_e0010-E603.dwg - 5/11/2016 1:30 PM