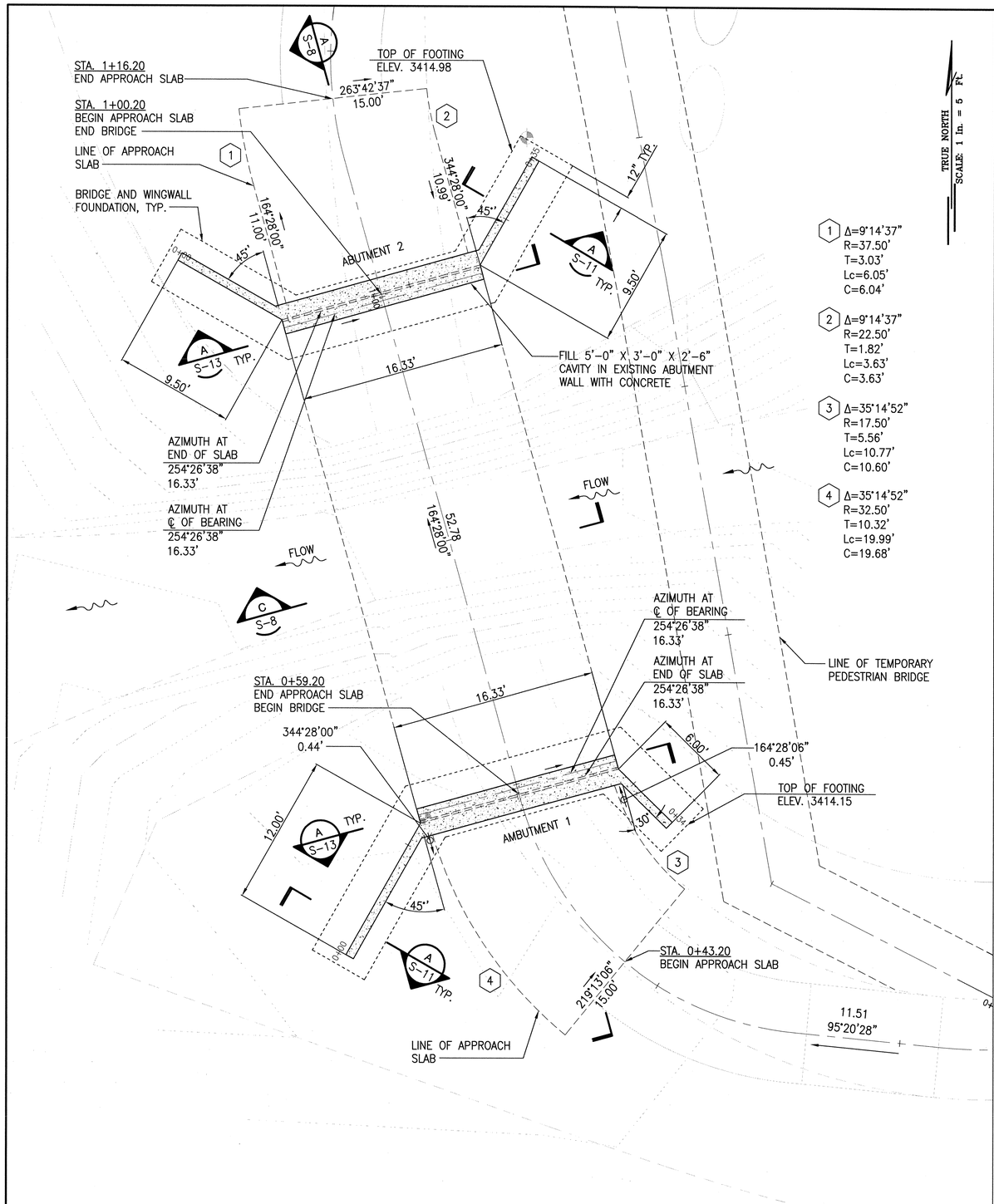

1 S-5 BRIDGE #1 - FOUNDATION PLAN

SCALE: 1" = 5'

5' 0 5'

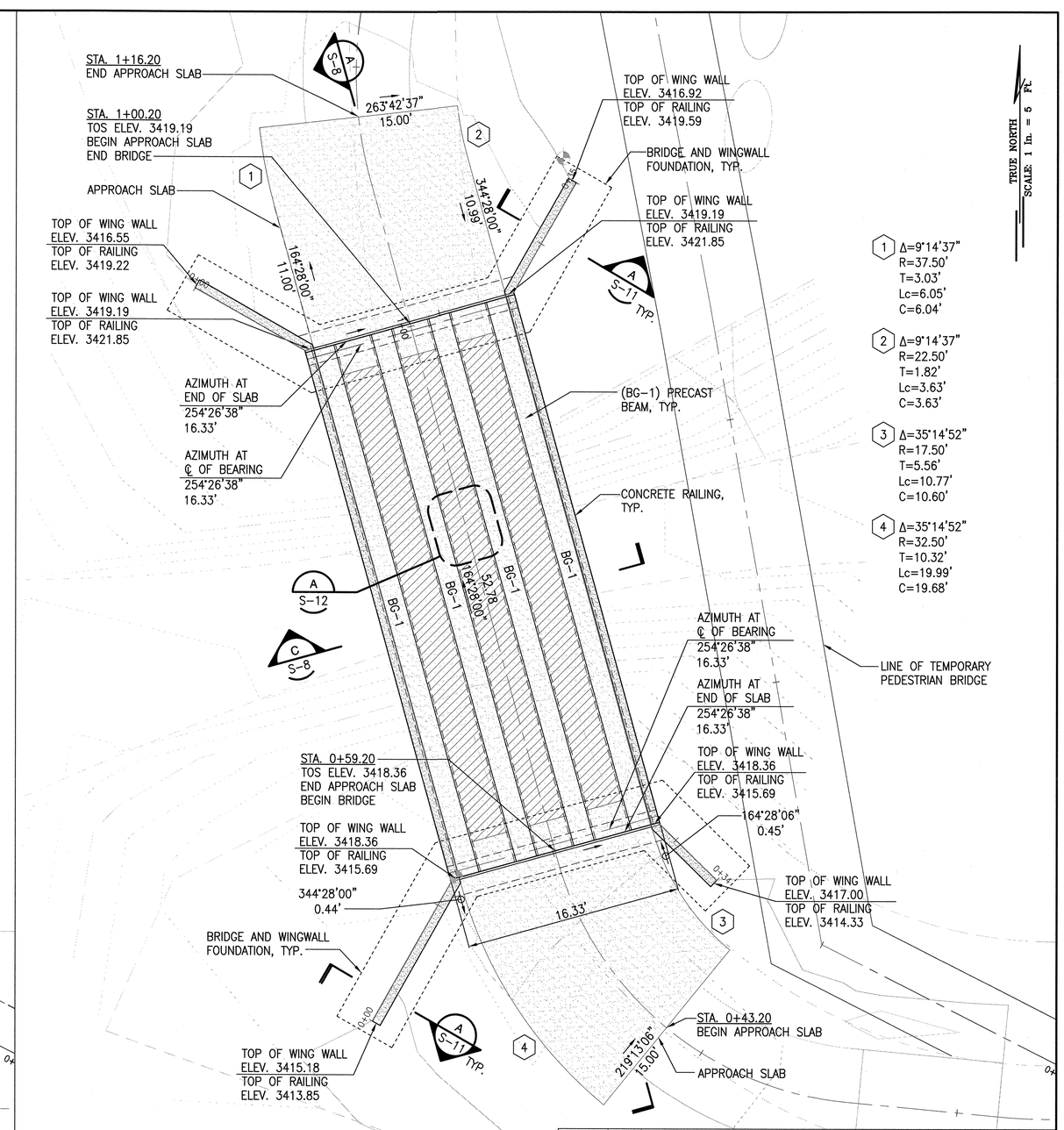

2 S-5 BRIDGE #1 - BRIDGE DECK FRAMING PLAN

SCALE: 1" = 5'

5' 0 5'

REVISION NO.	SYM.	DESCRIPTION	SHT./OF	DATE	APPROVED

MYRON G. OKUBO
LICENSED PROFESSIONAL ENGINEER
NO. 4320-S
HAWAII U.S.A.

04/30/18
EXPIRATION DATE OF THE LICENSE

THIS WORK WAS PREPARED BY ME OR UNDER MY SUPERVISION AND CONSTRUCTION OF THIS PROJECT WILL BE UNDER MY OBSERVATION.

STATE OF HAWAII
DEPARTMENT OF LAND AND NATURAL RESOURCES
ENGINEERING DIVISION

CAMP 10 ACCESS ROAD BRIDGES
WAIMEA, KAUAI, HAWAII

BRIDGE #1 - PLANS

DESIGNED: LM
DRAWN: NS/LC
CHECKED: MO
SUBMITTED:
DATE: APRIL 4, 2016
SCALE: AS SHOWN

APPROVED:
CHIEF ENGINEER
APR 26 2016
DATE

DRAWING NO. S-5

JOB NO. D01CK62A

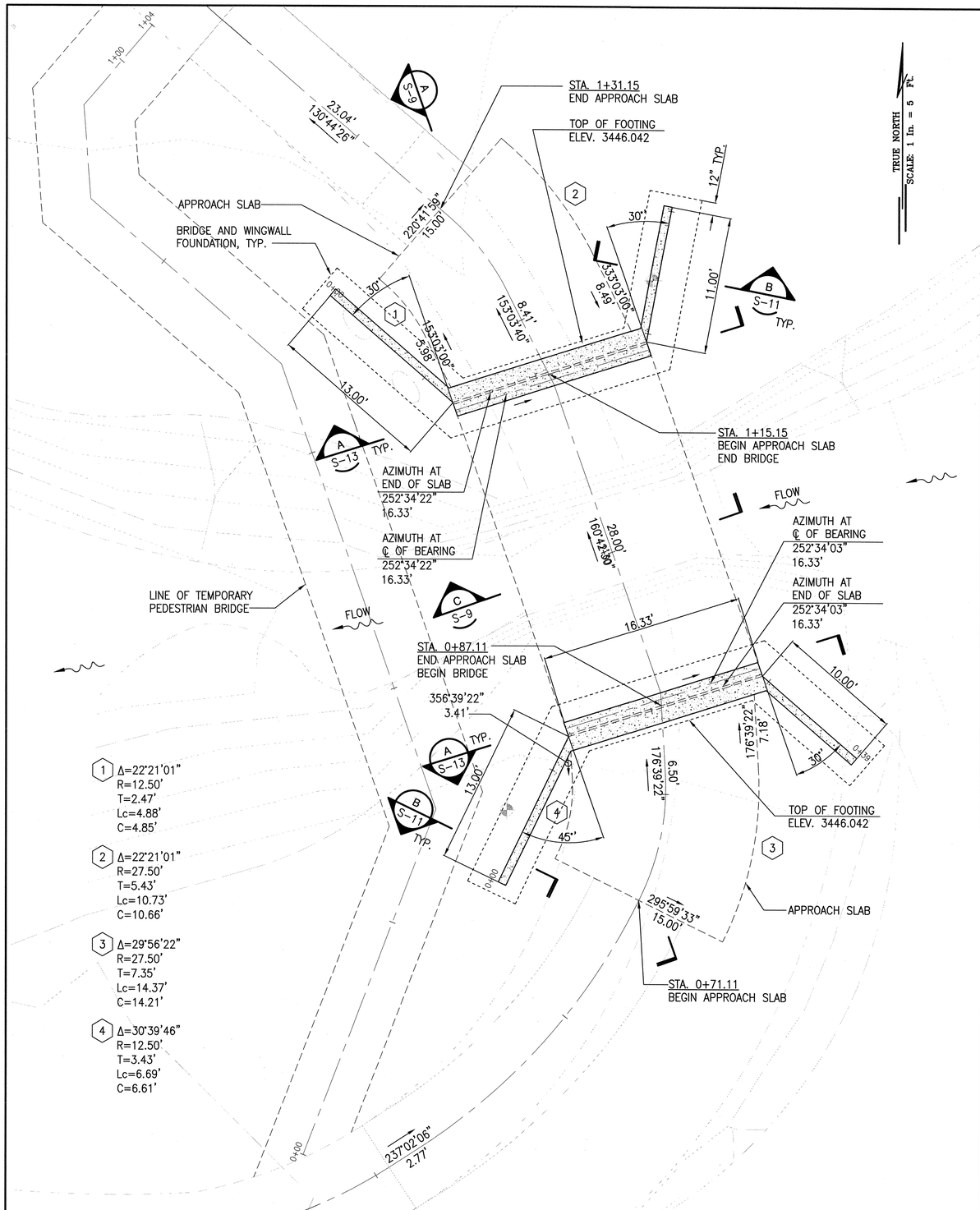

1 S-6 BRIDGE #2 - FOUNDATION PLAN

SCALE: 1" = 5'

5' 0 5'

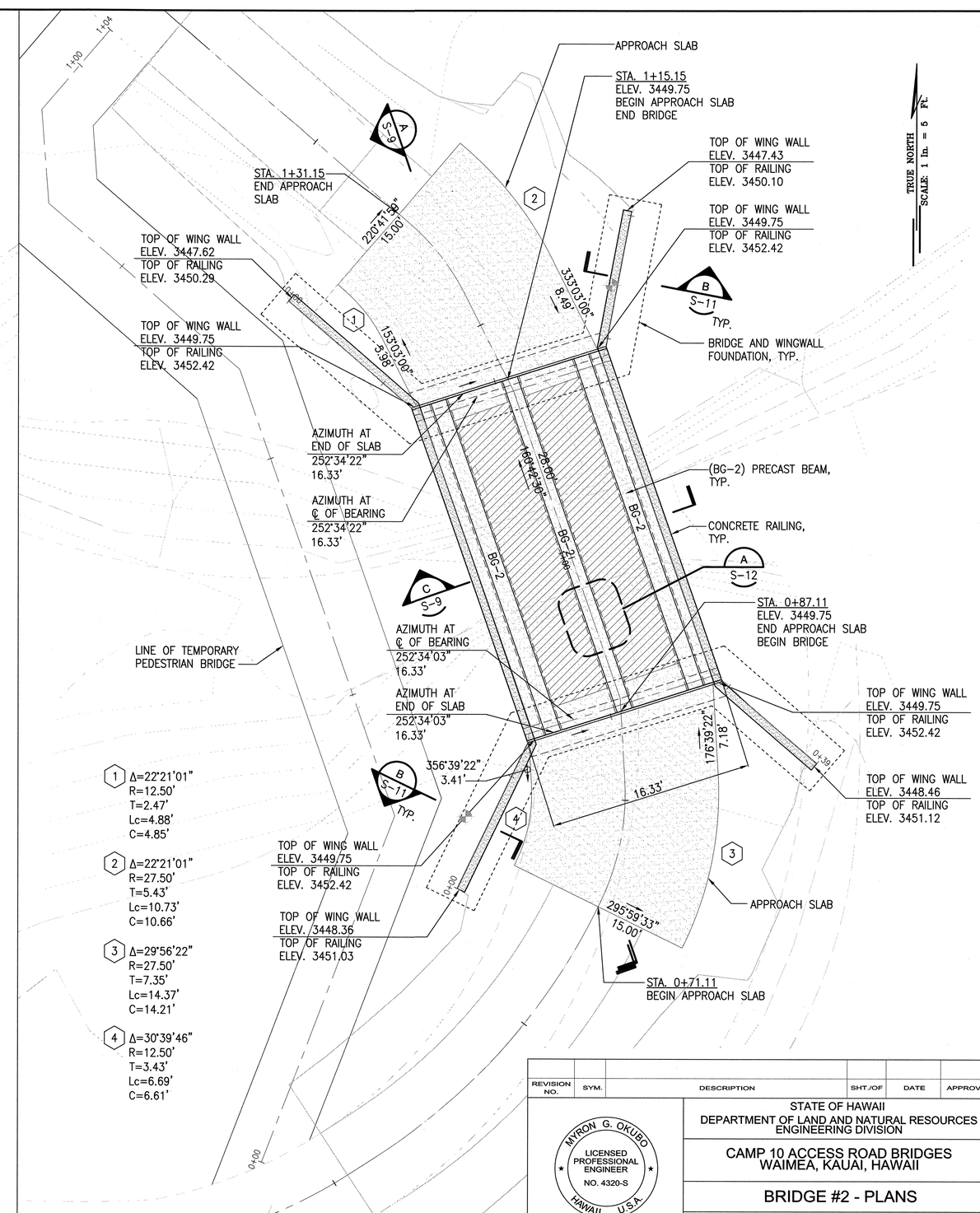

2 S-6 BRIDGE #2 - BRIDGE DECK FRAMING PLAN

SCALE: 1" = 5'

5' 0 5'

REVISION NO.	SYM.	DESCRIPTION	SHT./OF	DATE	APPROVED

MYRON G. OKUBO
LICENSED PROFESSIONAL ENGINEER
NO. 4320-S
HAWAII U.S.A.

04/30/18
EXPIRATION DATE OF THE LICENSE

THIS WORK WAS PREPARED BY ME OR UNDER MY SUPERVISION AND CONSTRUCTION OF THIS PROJECT WILL BE UNDER MY OBSERVATION.

STATE OF HAWAII
DEPARTMENT OF LAND AND NATURAL RESOURCES
ENGINEERING DIVISION

CAMP 10 ACCESS ROAD BRIDGES
WAIMEA, KAUAI, HAWAII

BRIDGE #2 - PLANS

DESIGNED: LM	SUBMITTED:
DRAWN: NS/LC	DATE: APRIL 4, 2016
CHECKED: MO	SCALE: AS SHOWN
APPROVED: CHIEF ENGINEER	APR 2 6 2016 DATE

DRAWING NO. S-6

JOB NO. D01CK62A

SHEET NO. 24 OF 32 SHEETS

C:\USERS\CDEOCARES\DESKTOP\2014\SSFM 22X34 PROFILE SHEET TEMPLATE.DWG 02/13/14 13:32 CBD

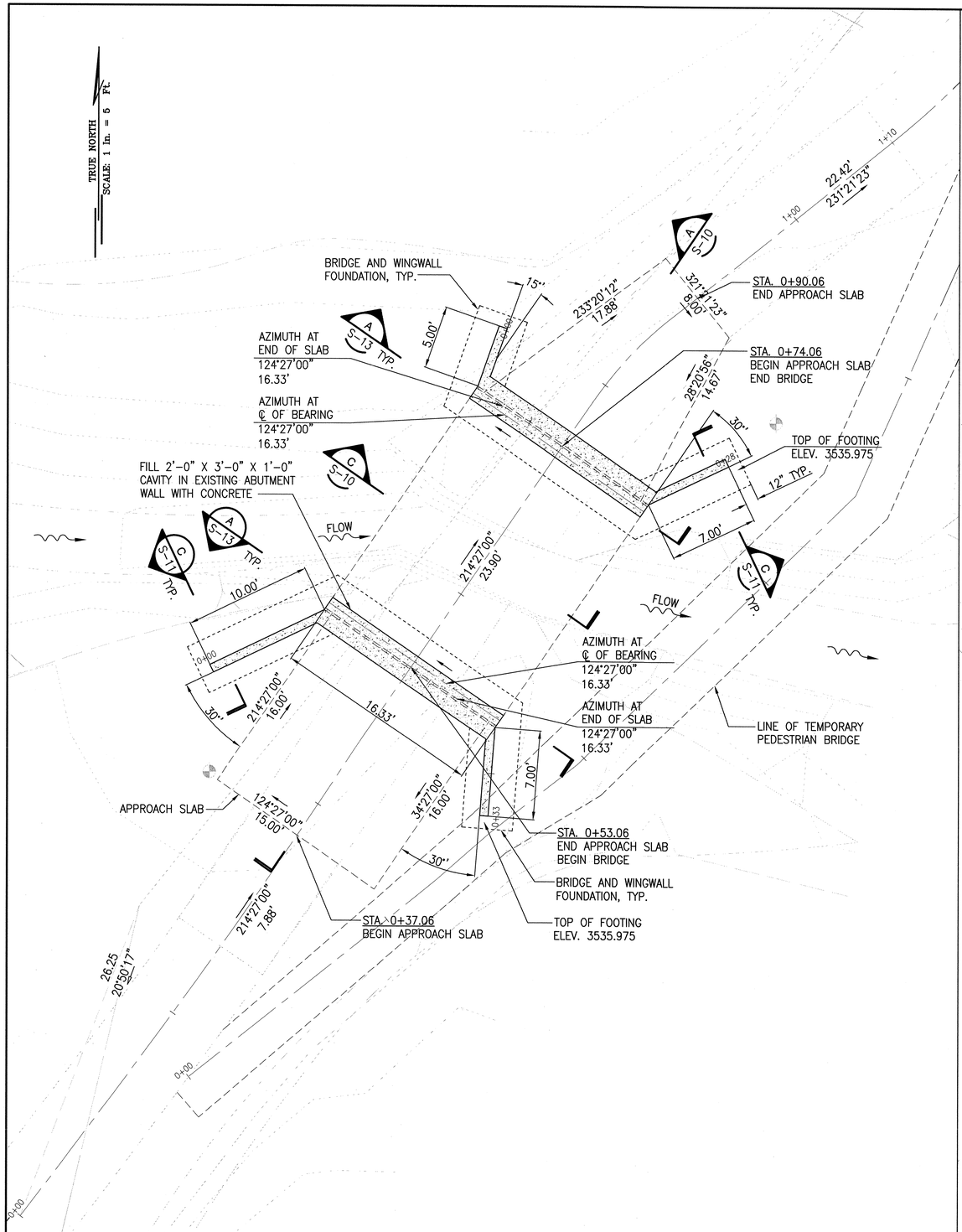

1 BRIDGE #3- FOUNDATION PLAN

S-7 SCALE: 1" = 5'

5' 0 5'

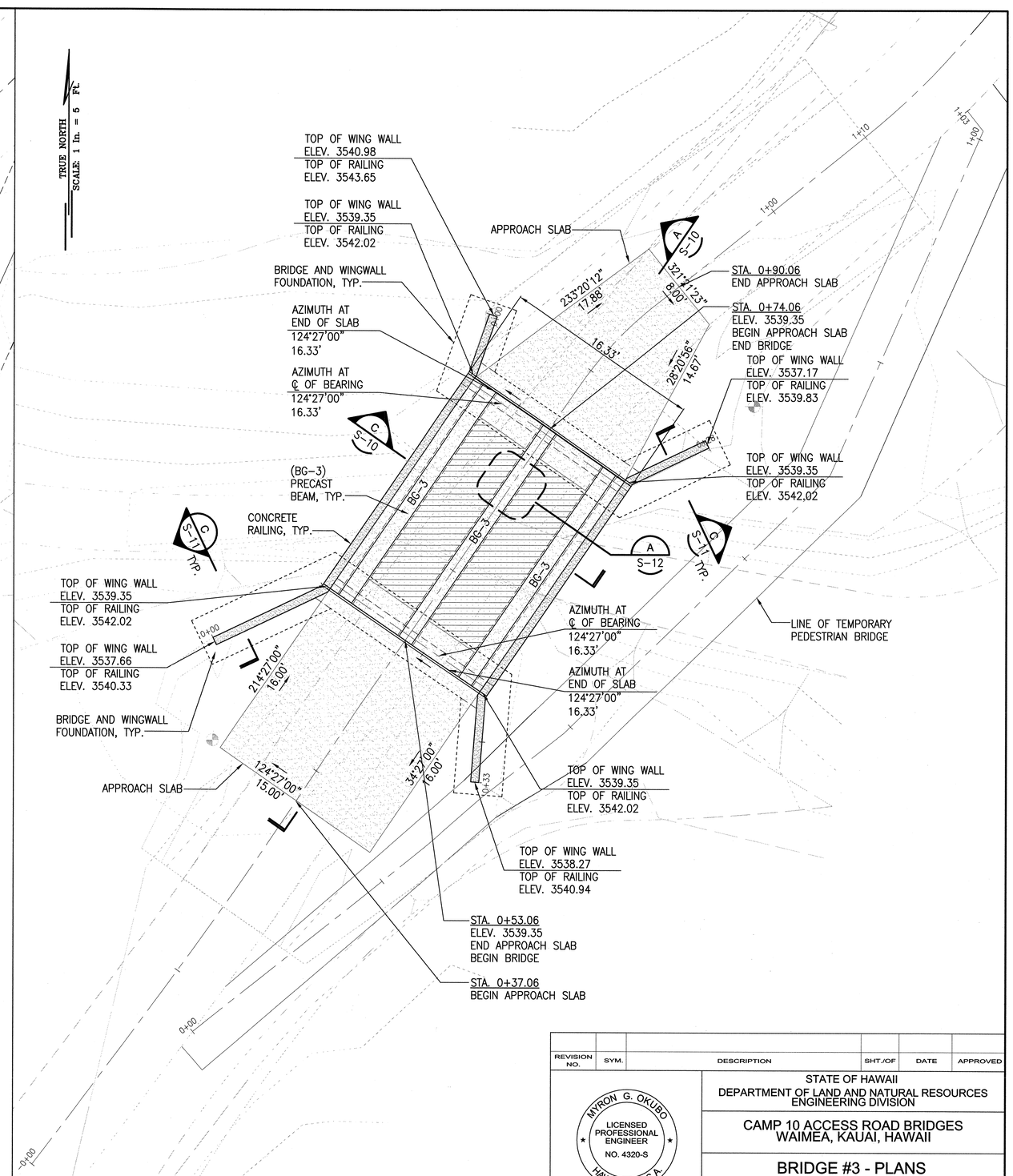

2 BRIDGE #3 - BRIDGE DECK FRAMING PLAN

S-7 SCALE: 1" = 5'

5' 0 5'

REVISION NO.	SYM.	DESCRIPTION	SHT./OF	DATE	APPROVED

MYRON G. OKUBO
LICENSED PROFESSIONAL ENGINEER
NO. 4320-S
HAWAII U.S.A.

04/30/18
EXPIRATION DATE OF THE LICENSE

THIS WORK WAS PREPARED BY ME OR UNDER MY SUPERVISION AND CONSTRUCTION OF THIS PROJECT WILL BE UNDER MY OBSERVATION.

STATE OF HAWAII
DEPARTMENT OF LAND AND NATURAL RESOURCES
ENGINEERING DIVISION

CAMP 10 ACCESS ROAD BRIDGES
WAIMEA, KAUAI, HAWAII

BRIDGE #3 - PLANS

DESIGNED: LM	SUBMITTED:
DRAWN: NS/LC	DATE: APRIL 4, 2016
CHECKED: MO	SCALE: AS SHOWN
APPROVED: CHIEF ENGINEER	APR 26 2016 DATE
	DRAWING NO. S-7

JOB NO. D01CK62A SHEET NO. 25 OF 32 SHEETS

W:_CIVIL 3D PROJECTS\2015_077.000 DLNR CAMP 10 ACCESS RD\01 CIVIL DRAWINGS\BRIDGE 3 PNP.DWG 01/07/16 17:22 CTC

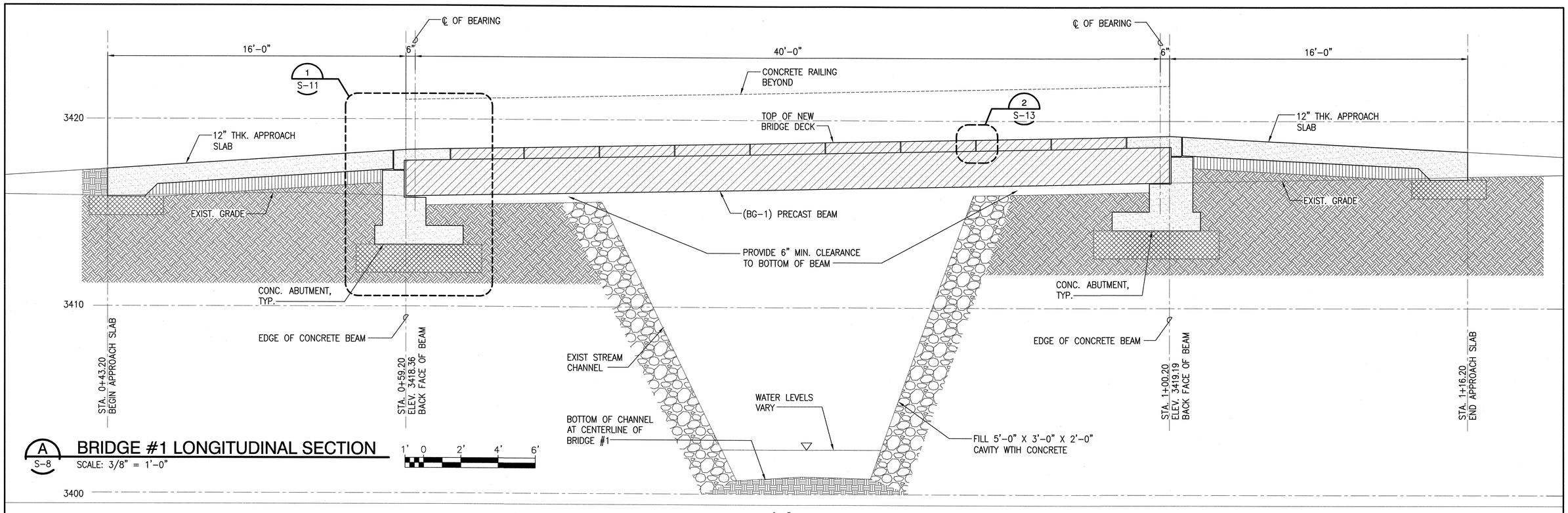

A S-8 BRIDGE #1 LONGITUDINAL SECTION

SCALE: 3/8" = 1'-0"

1' 0 2' 4' 6'

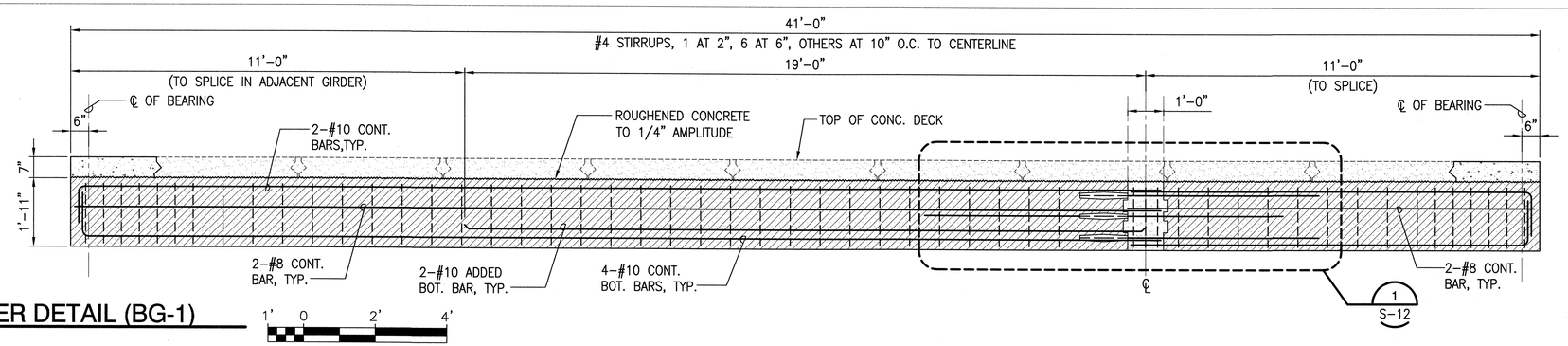

B S-8 BRIDGE #1 GIRDER DETAIL (BG-1)

SCALE: 1/2" = 1'-0"

1' 0 2' 4'

NOTES:

1. CONTRACTOR HAS OPTION TO SPLICE GIRDER USING TYPE 2 MECHANICAL SPLICE CAPABLE OF DEVELOPING THE ULTIMATE STRENGTH OF THE REINFORCING STEEL ALTERNATE SPLICE AT EACH END OF BRIDGE.
2. PROVIDE 1-3/8" CAMBER AT MIDSPAN.

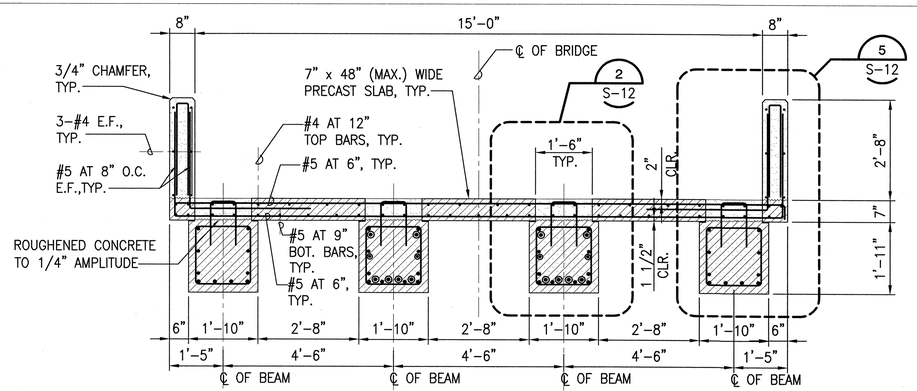

C S-8 BRIDGE #1 CROSS SECTION

SCALE: 1/2" = 1'-0"

1' 0 2' 4'

NOTE:

CONTRACTOR TO TAKE ADEQUATE PRECAUTIONS TO STABILIZE THE GIRDERS DURING TRANSPORT, ERECTION, AND PLACEMENT OF DECK PANELS.

REVISION NO.	SYM.	DESCRIPTION	SHT./OF	DATE	APPROVED

MYRON G. OKUBO LICENSED PROFESSIONAL ENGINEER NO. 4320-S HAWAII U.S.A.

04/30/18 EXPIRATION DATE OF THE LICENSE

THIS WORK WAS PREPARED BY ME OR UNDER MY SUPERVISION AND CONSTRUCTION OF THIS PROJECT WILL BE UNDER MY OBSERVATION.

STATE OF HAWAII
DEPARTMENT OF LAND AND NATURAL RESOURCES
ENGINEERING DIVISION

CAMP 10 ACCESS ROAD BRIDGES
WAIMEA, KAUAI, HAWAII

BRIDGE #1 - SECTIONS AND DETAILS

DESIGNED: LM | SUBMITTED:
DRAWN: NS/LC | DATE: APRIL 4, 2016
CHECKED: MO | SCALE: AS SHOWN
APPROVED: CHIEF ENGINEER | APR 26 2018 DATE | DRAWING NO. S-8

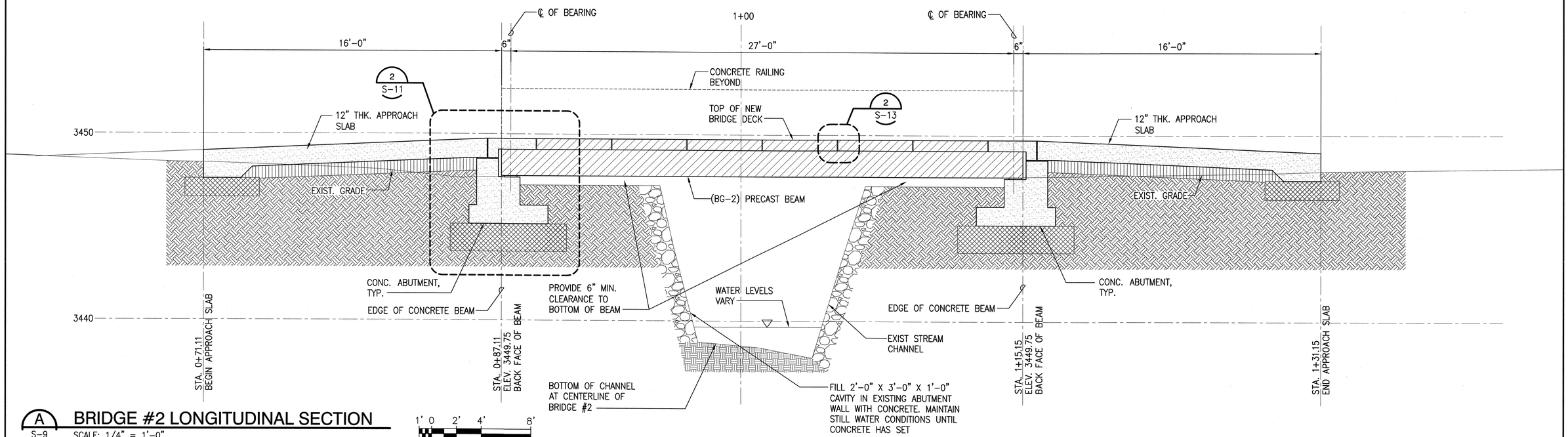

A / S-9 BRIDGE #2 LONGITUDINAL SECTION

SCALE: 1/4" = 1'-0"

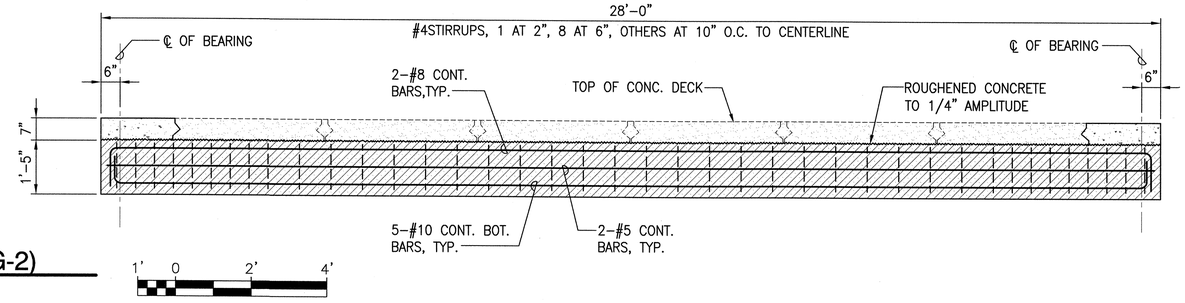

B / S-9 BRIDGE #2 GIRDER DETAIL (BG-2)

SCALE: 1/2" = 1'-0"

NOTE:

1. PROVIDE 5/8" CAMBER AT MIDSPAN.

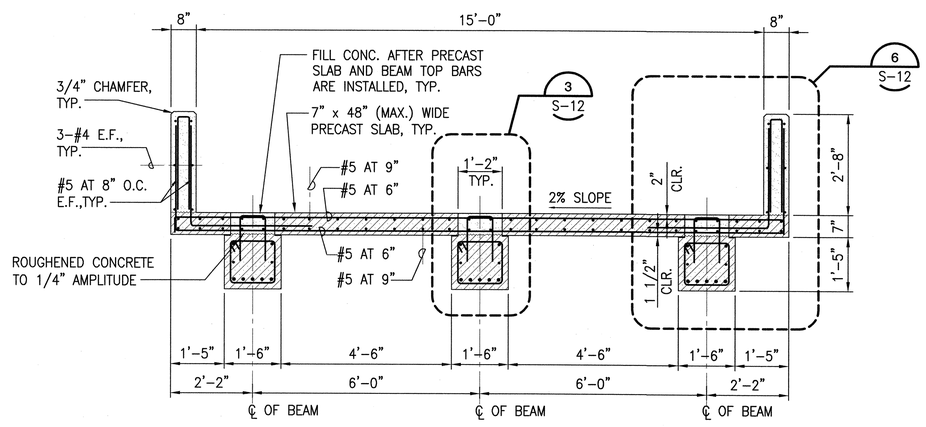

C / S-9 BRIDGE #2 CROSS SECTION

SCALE: 1/2" = 1'-0"

NOTE:

CONTRACTOR TO TAKE ADEQUATE PRECAUTIONS TO STABILIZE THE GIRDERS DURING TRANSPORT, ERECTION, AND PLACEMENT OF DECK PANELS.

REVISION NO.	SYM.	DESCRIPTION	SHT./OF	DATE	APPROVED

MYRON G. OKUBO LICENSED PROFESSIONAL ENGINEER NO. 4320-S HAWAII U.S.A.

04/30/18
EXPIRATION DATE OF THE LICENSE

THIS WORK WAS PREPARED BY ME OR UNDER MY SUPERVISION AND CONSTRUCTION OF THIS PROJECT WILL BE UNDER MY OBSERVATION.

STATE OF HAWAII
DEPARTMENT OF LAND AND NATURAL RESOURCES
ENGINEERING DIVISION

CAMP 10 ACCESS ROAD BRIDGES
WAIMEA, KAUAI, HAWAII

BRIDGE #2 - SECTIONS AND DETAILS

DESIGNED: LM	SUBMITTED:
DRAWN: NS/LC	DATE: APRIL 4, 2016
CHECKED: MO	SCALE: AS SHOWN
APPROVED: CHIEF ENGINEER	APR 26 2016 DATE

DRAWING NO. S-9

JOB NO. D01CK62A SHEET NO. 27 OF 32 SHEETS

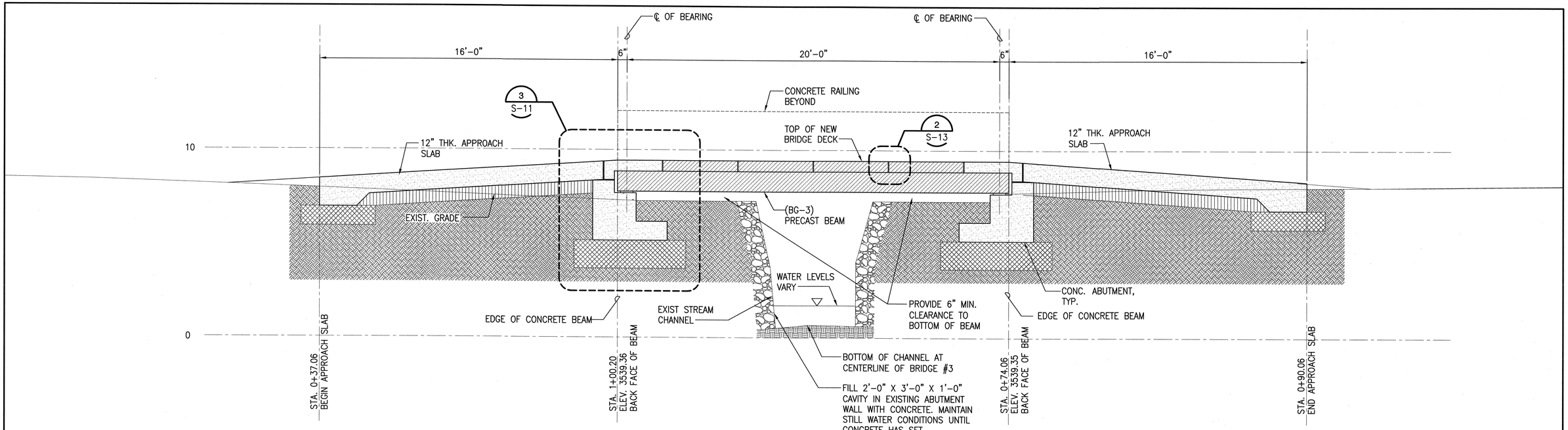

A / S-10 BRIDGE #3 LONGITUDINAL SECTION

SCALE: 3/8" = 1'-0"

1' 0 2' 4' 6'

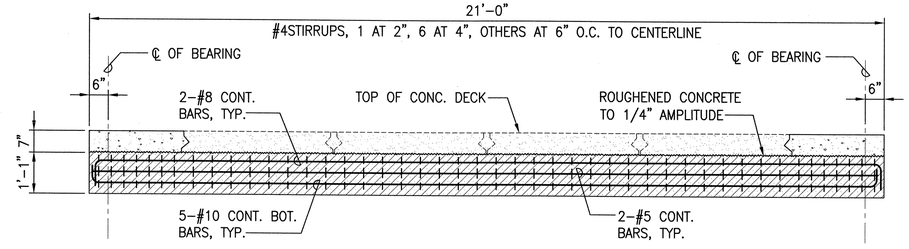

NOTE:

1. PROVIDE 1/2" CAMBER AT MIDSPAN.

B / S-10 BRIDGE #3 GIRDER DETAIL (BG-3)

SCALE: 1/2" = 1'-0"

1' 0 2' 4'

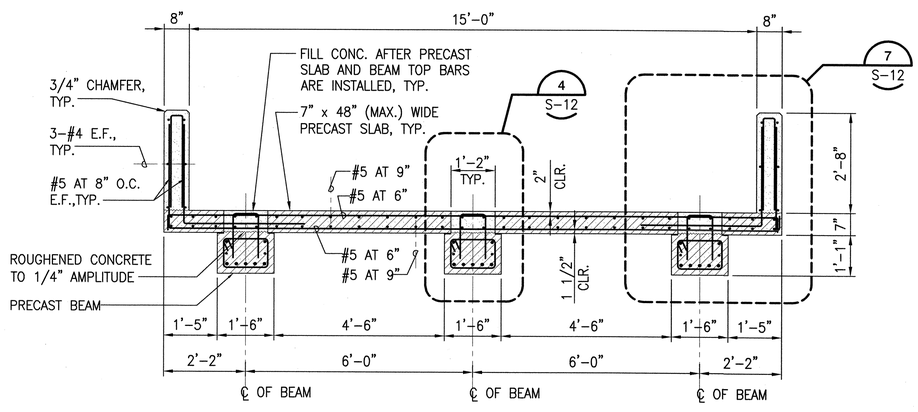

C / S-10 BRIDGE #3 CROSS SECTION

SCALE: 1/2" = 1'-0"

1' 0 2' 4'

NOTE:

CONTRACTOR TO TAKE ADEQUATE PRECAUTIONS TO STABILIZE THE GIRDERS DURING TRANSPORT, ERECTION, AND PLACEMENT OF DECK PANELS.

REVISION NO.	SYM.	DESCRIPTION	SHT./OF	DATE	APPROVED

MYRON G. OKUBO
LICENSED PROFESSIONAL ENGINEER
NO. 4320-S
HAWAII U.S.A.

04/30/18
EXPIRATION DATE OF THE LICENSE

THIS WORK WAS PREPARED BY ME OR UNDER MY SUPERVISION AND CONSTRUCTION OF THIS PROJECT WILL BE UNDER MY OBSERVATION.

STATE OF HAWAII
DEPARTMENT OF LAND AND NATURAL RESOURCES
ENGINEERING DIVISION

CAMP 10 ACCESS ROAD BRIDGES
WAIMEA, KAUAI, HAWAII

BRIDGE #3 - SECTIONS AND DETAILS

DESIGNED: LM	SUBMITTED:
DRAWN: NS/LC	DATE: APRIL 4, 2016
CHECKED: MO	SCALE: AS SHOWN
APPROVED: CHIEF ENGINEER	APR 2 6 2016 DATE
	DRAWING NO. S-10

JOB NO. D01CK62A

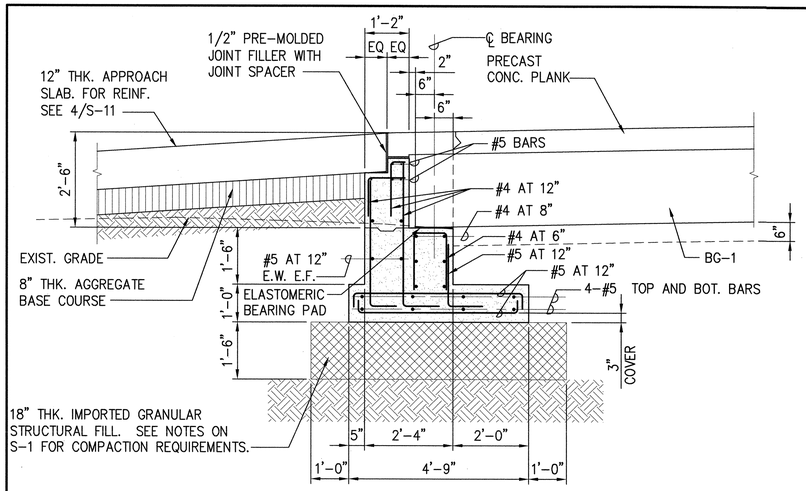

1 TYP. ABUTMENT DETAIL AT BRIDGE #1

S-11 SCALE: 1/2" = 1'-0"

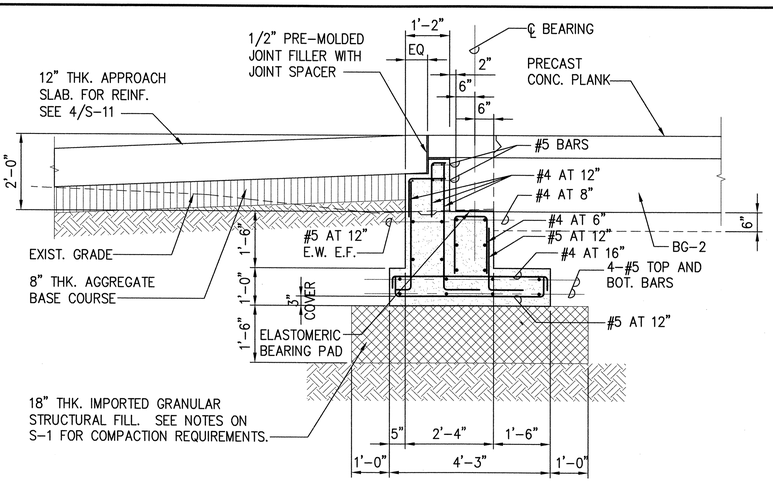

2 TYP. ABUTMENT DETAIL AT BRIDGE #2

S-11 SCALE: 1/2" = 1'-0"

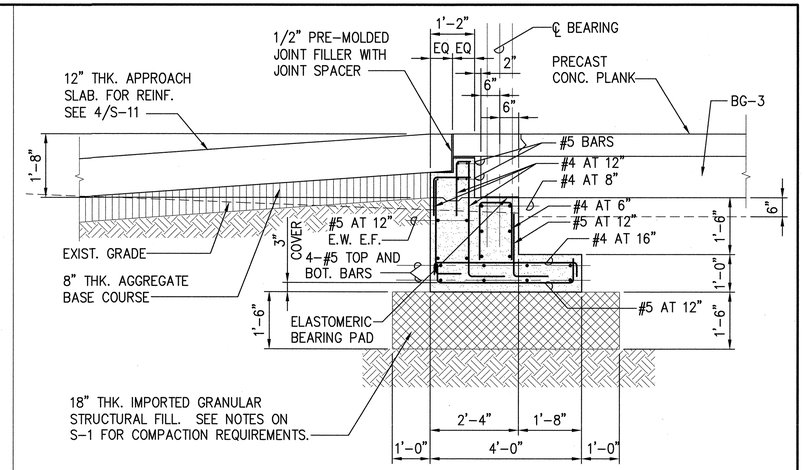

3 TYP. ABUTMENT DETAIL AT BRIDGE #3

S-11 SCALE: 1/2" = 1'-0"

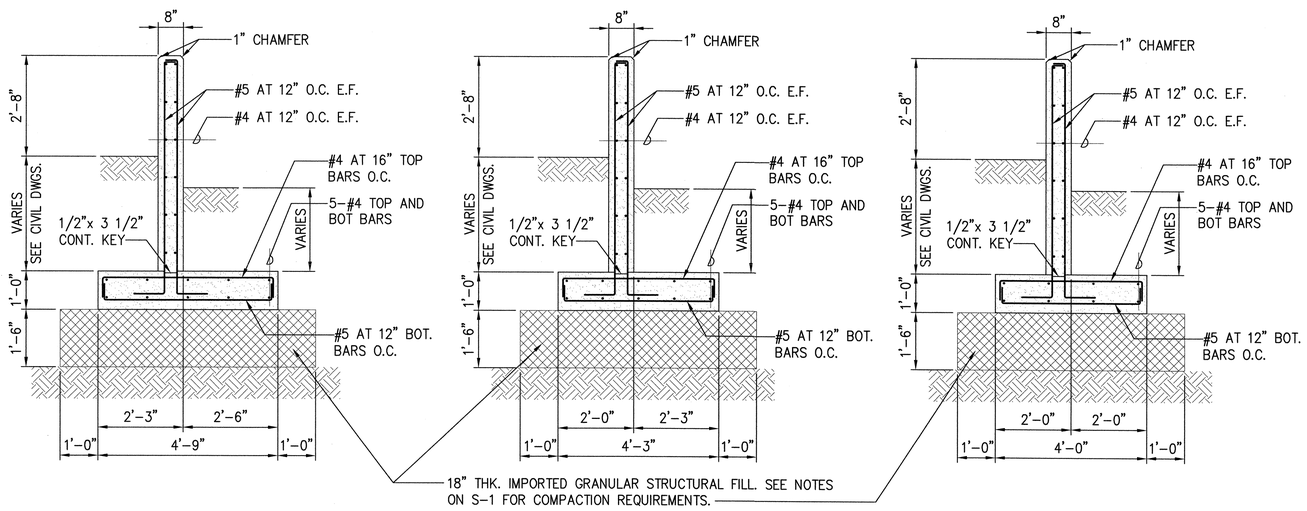

A SECTION

S-11 SCALE: 1/2" = 1'-0"

B SECTION

S-11 SCALE: 1/2" = 1'-0"

C SECTION

S-11 SCALE: 1/2" = 1'-0"

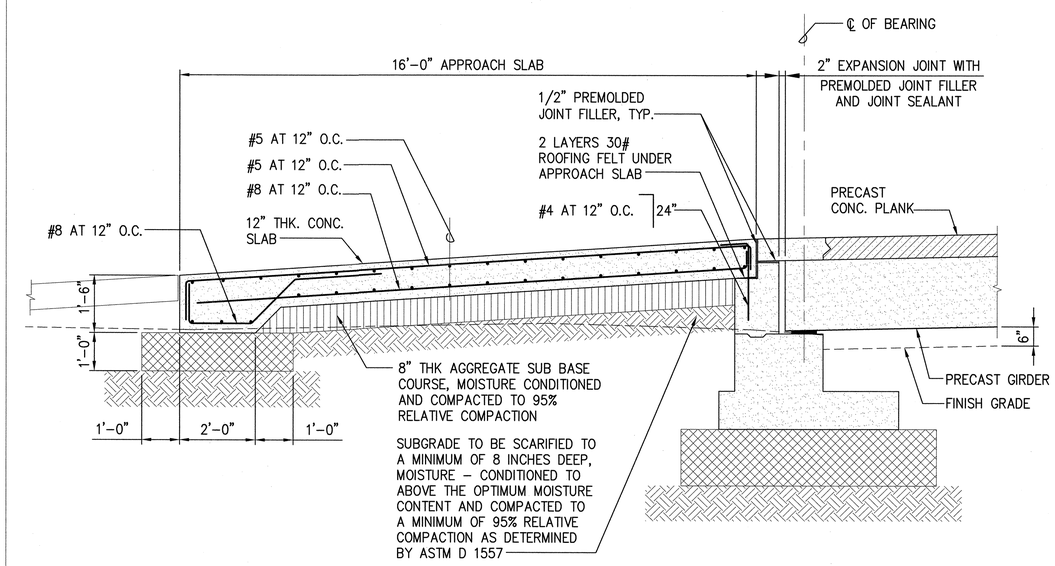

4 TYP. APPROACH SLAB DETAIL

S-11 SCALE: 1/2" = 1'-0"

NOTE: SPACE RAILING JOINTS AT MAXIMUM 8'-0" ON CENTER

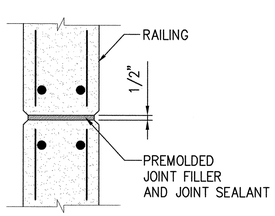

5 TYP. JOINT AT RAILING

S-11 SCALE: 1 1/2" = 1'-0"

GRAPHIC SCALE:

1' 0 2' 4'

SCALE: 1/2" = 1'-0"

6" 0 6" 12" 18"

SCALE: 1 1/2" = 1'-0"

REVISION NO.	SYM.	DESCRIPTION	SHT./OF	DATE	APPROVED

MYRON G. OKUBO LICENSED PROFESSIONAL ENGINEER NO. 4320-S HAWAII U.S.A.

04/30/18 EXPIRATION DATE OF THE LICENSE

THIS WORK WAS PREPARED BY ME OR UNDER MY SUPERVISION AND CONSTRUCTION OF THIS PROJECT WILL BE UNDER MY OBSERVATION.

STATE OF HAWAII
DEPARTMENT OF LAND AND NATURAL RESOURCES
ENGINEERING DIVISION

CAMP 10 ACCESS ROAD BRIDGES
WAIMEA, KAUAI, HAWAII

BRIDGE DETAILS

DESIGNED: LM | SUBMITTED:
DRAWN: NS/LC | DATE: APRIL 4, 2016
CHECKED: MO | SCALE: AS SHOWN

APPROVED: CHIEF ENGINEER | APR 2 6 2016 DATE

DRAWING NO. S-11

JOB NO. D01CK62A SHEET NO. 29 OF 32 SHEETS

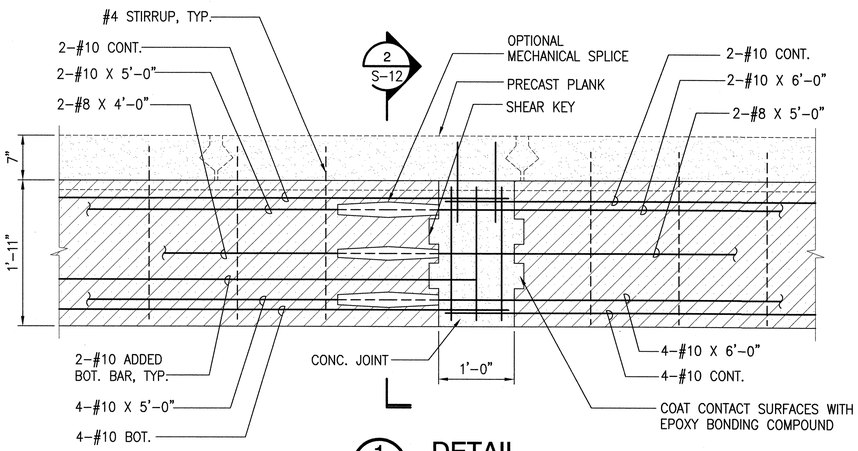

1 S-12 DETAIL
SCALE: 1" = 1'-0"

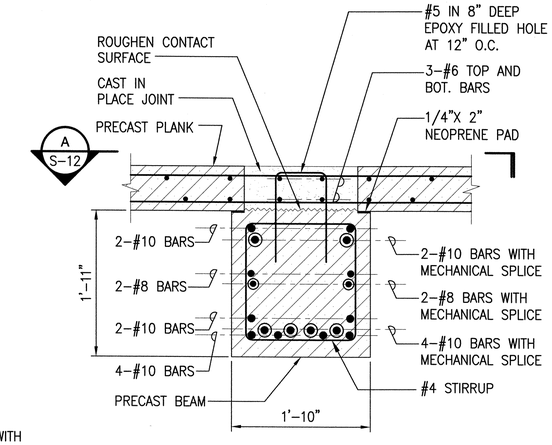

2 S-12 SECTION
SCALE: 1" = 1'-0"

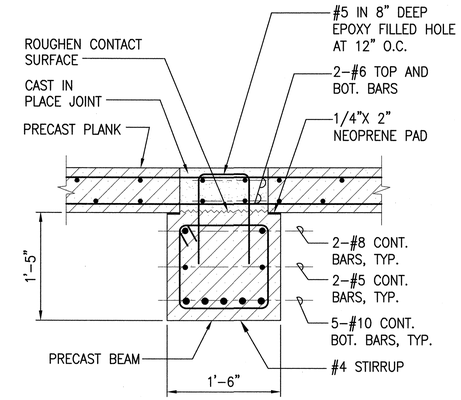

3 S-12 DETAIL
SCALE: 1" = 1'-0"

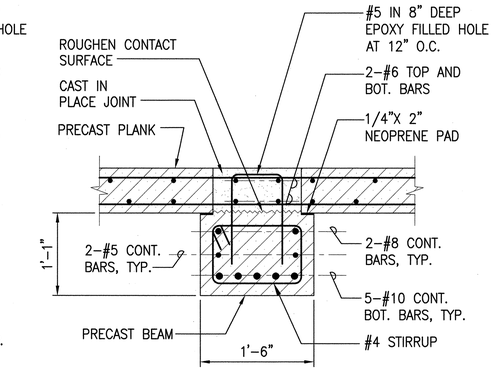

4 S-12 DETAIL
SCALE: 1" = 1'-0"

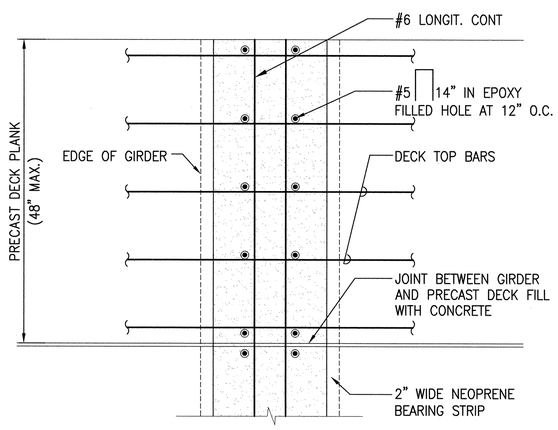

A S-12 TYPICAL SECTION
SCALE: 1" = 1'-0"

NOTE:

PLACE CONCRETE FOR RAILING AFTER PLANKS HAVE BEEN PLACED.

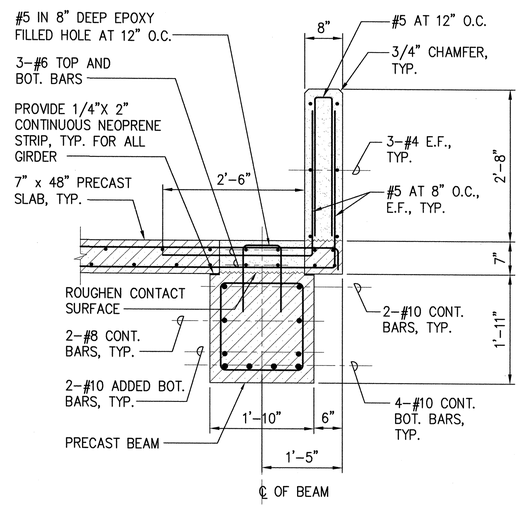

5 S-12 DETAIL
SCALE: 3/4" = 1'-0"

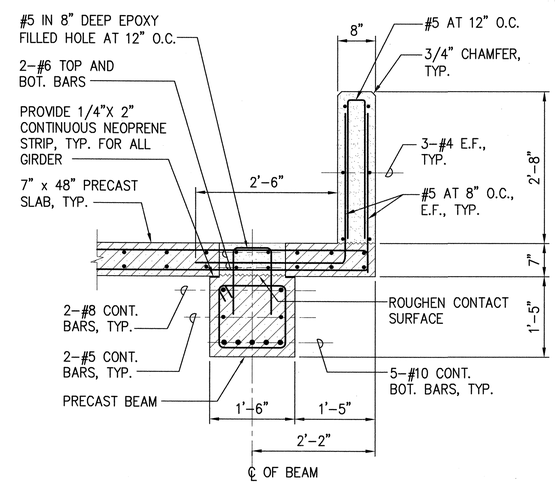

6 S-12 DETAIL
SCALE: 3/4" = 1'-0"

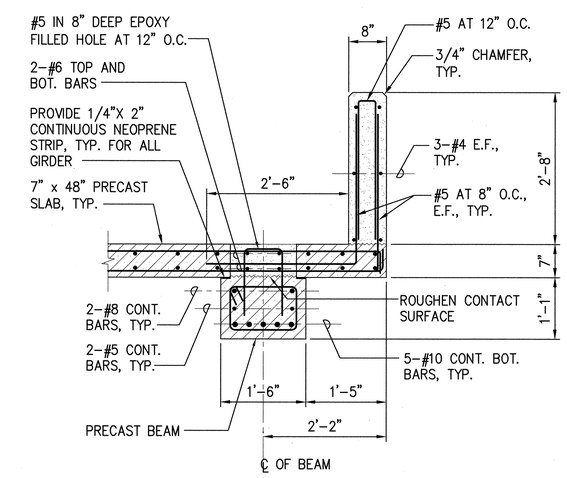

7 S-12 DETAIL
SCALE: 3/4" = 1'-0"

GRAPHIC SCALE:

1' 0 1'
SCALE: 1" = 1'-0"

1' 0 1' 2'
SCALE: 3/4" = 1'-0"

REVISION NO.	SYM.	DESCRIPTION	SHT./OF	DATE	APPROVED

MYRON G. OKUBO
LICENSED PROFESSIONAL ENGINEER
NO. 4320-S
HAWAII U.S.A.

04/30/18
EXPIRATION DATE OF THE LICENSE

THIS WORK WAS PREPARED BY ME OR UNDER MY SUPERVISION AND CONSTRUCTION OF THIS PROJECT WILL BE UNDER MY OBSERVATION.

STATE OF HAWAII
DEPARTMENT OF LAND AND NATURAL RESOURCES
ENGINEERING DIVISION

CAMP 10 ACCESS ROAD BRIDGES
WAIMEA, KAUAI, HAWAII

BRIDGE DETAILS

DESIGNED: LM
DRAWN: NS/LC
CHECKED: MO
SUBMITTED:
DATE: APRIL 4, 2016
SCALE: AS SHOWN

APPROVED:
CHIEF ENGINEER
APR 26 2016
DATE

DRAWING NO. S-12

JOB NO. D01CK62A SHEET NO. 30 OF 32 SHEETS

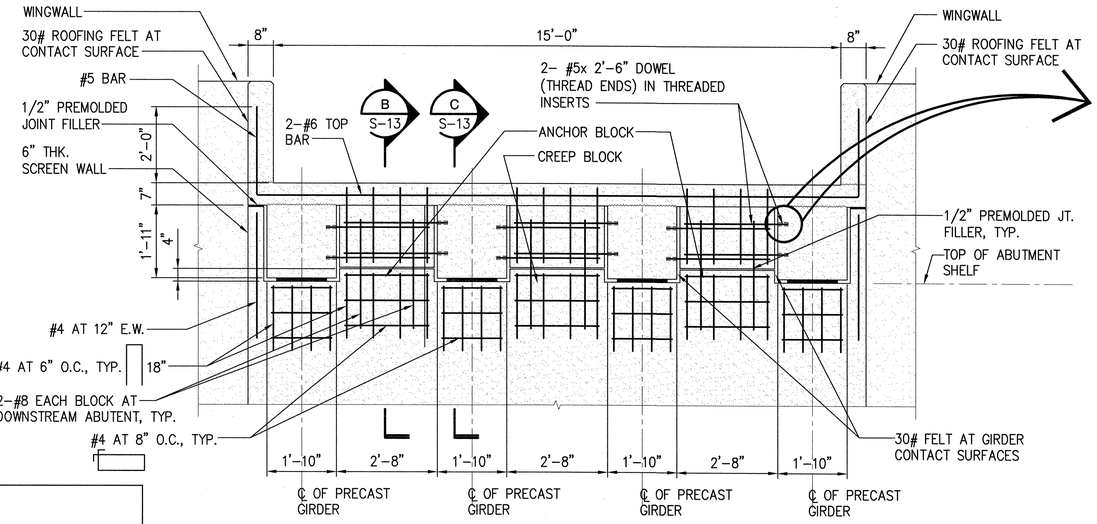

NOTE:

BRIDGE #1 ABUTMENT SHOWN. BRIDGE #2 AND BRIDGE #3 ABUTMENTS SIMILAR.

A S-13 TYPICAL SECTION THROUGH ANCHOR BLOCK AT ABUTMENT

SCALE: 1/2" = 1'-0"

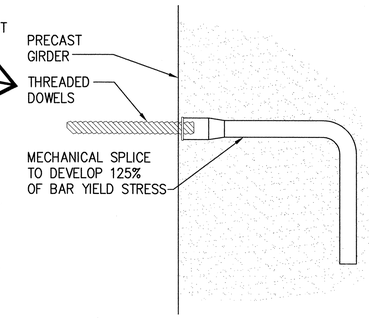

THREADED INSERT DETAIL

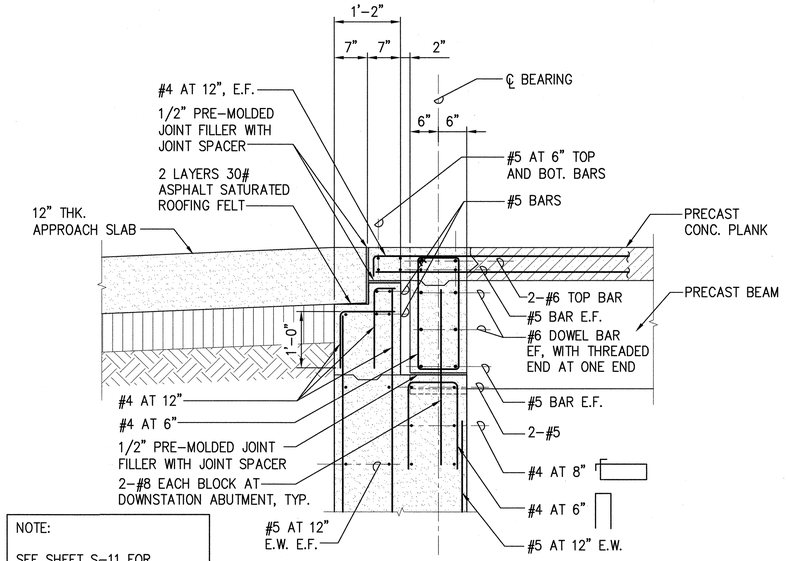

NOTE:

SEE SHEET S-11 FOR BALANCE OF REINFORCEMENT.

B S-13 TYPICAL BLOCK DETAIL

SCALE: 3/4" = 1'-0"

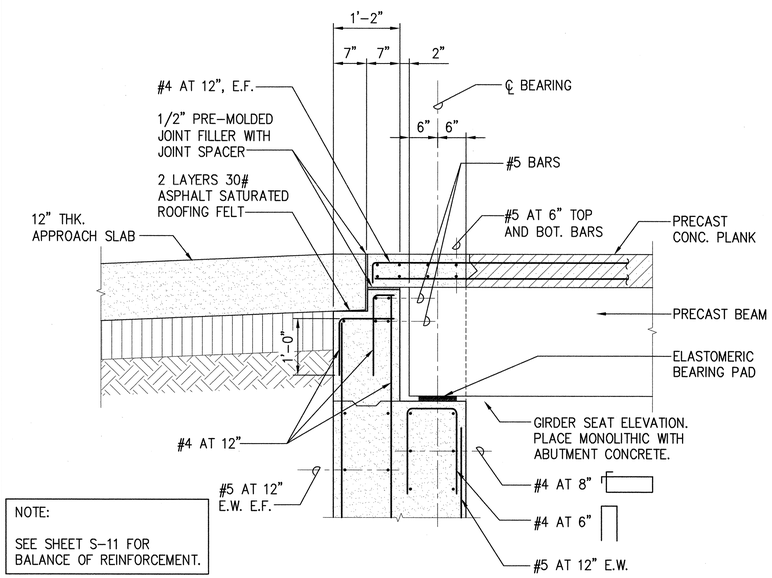

NOTE:

SEE SHEET S-11 FOR BALANCE OF REINFORCEMENT.

C S-13 CONDITION AT END OF GIRDER

SCALE: 3/4" = 1'-0"

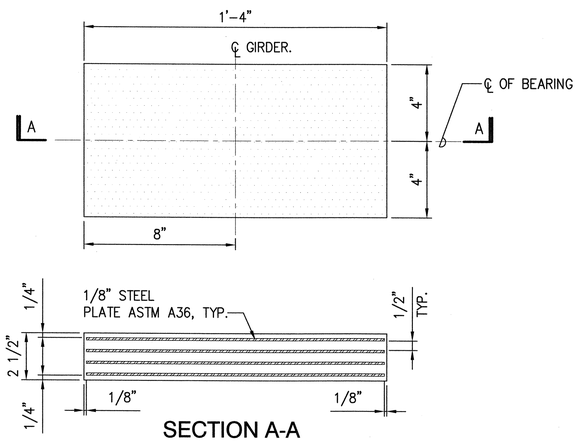

SECTION A-A

NOTE:

ELASTOMERIC BEARING PAD TO CONSIST OF NEOPRENE 60 HARDNESS WITH STEEL LAMINATIONS.

1 S-13 ELASTOMERIC BEARING PAD DETAILS

SCALE: 3" = 1'-0"

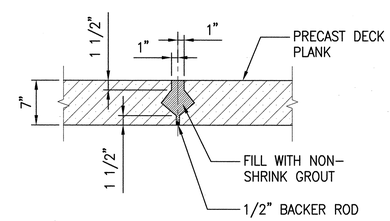

2 S-13 JOINT BETWEEN DECK PLANKS

SCALE: 1" = 1'-0"

GRAPHIC SCALE:

1' 0 2' 4'
SCALE: 1/2" = 1'-0"

1' 0 1'
SCALE: 1" = 1'-0"

1' 0 1' 2'
SCALE: 3" = 1'-0"

3" 0 3" 6" 9"
SCALE: 3" = 1'-0"

REVISION NO.	SYM.	DESCRIPTION	SHT./OF	DATE	APPROVED

MYRON G. OKUBO
LICENSED PROFESSIONAL ENGINEER
NO. 4320-S
HAWAII U.S.A.

04/30/18
EXPIRATION DATE OF THE LICENSE

THIS WORK WAS PREPARED BY ME OR UNDER MY SUPERVISION AND CONSTRUCTION OF THIS PROJECT WILL BE UNDER MY OBSERVATION.

STATE OF HAWAII
DEPARTMENT OF LAND AND NATURAL RESOURCES
ENGINEERING DIVISION

CAMP 10 ACCESS ROAD BRIDGES
WAIMEA, KAUAI, HAWAII

BRIDGE DETAILS

DESIGNED: LM
DRAWN: NS/LC
CHECKED: MO
APPROVED:
CHIEF ENGINEER

SUBMITTED:
DATE: APRIL 4, 2016
SCALE: AS SHOWN
APR 26 2016
DATE

DRAWING NO. S-13

JOB NO. D01CK62A

SHEET NO. 31 OF 32 SHEETS

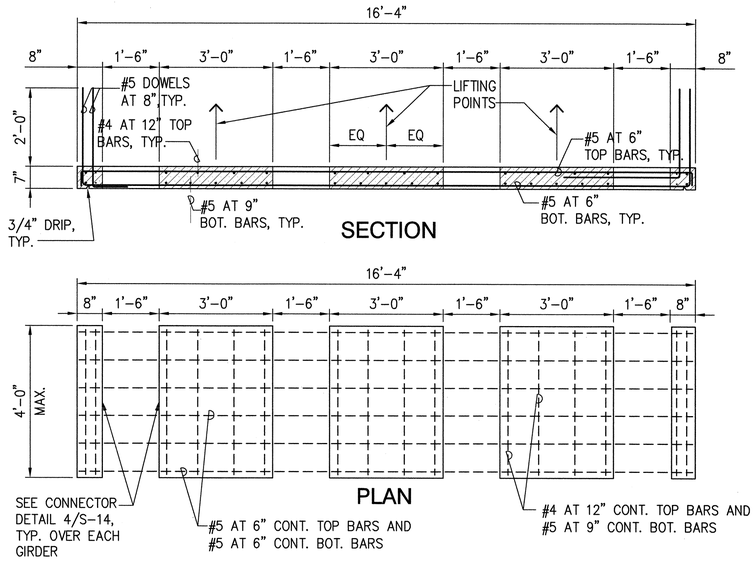

NOTES:

1. SEE 2/S-13 FOR JOINTS BETWEEN PANELS.
2. CONTRACTOR TO USE STRONGBACK OR OTHER LIFTING DEVICE TO TRANSPORT PRECAST DECK PANELS.

1 TYPICAL 7"x 48" MAX. PRECAST CONCRETE DECK FOR BRIDGE #1

S-14 SCALE: 1/2" = 1'-0"

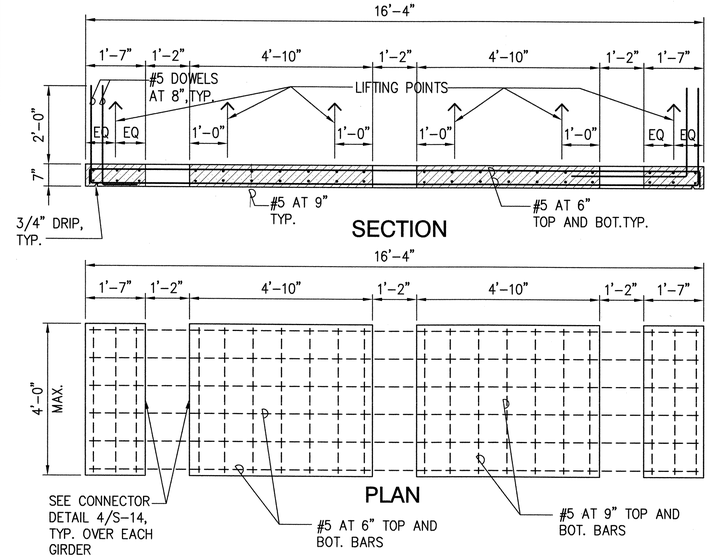

NOTES:

1. SEE 2/S-13 FOR JOINTS BETWEEN PANELS.
2. CONTRACTOR TO USE STRONGBACK OR OTHER LIFTING DEVICE TO TRANSPORT PRECAST DECK PANELS.

2 TYPICAL 7"x 48" MAX. PRECAST CONCRETE DECK FOR BRIDGE #2

S-14 SCALE: 1/2" = 1'-0"

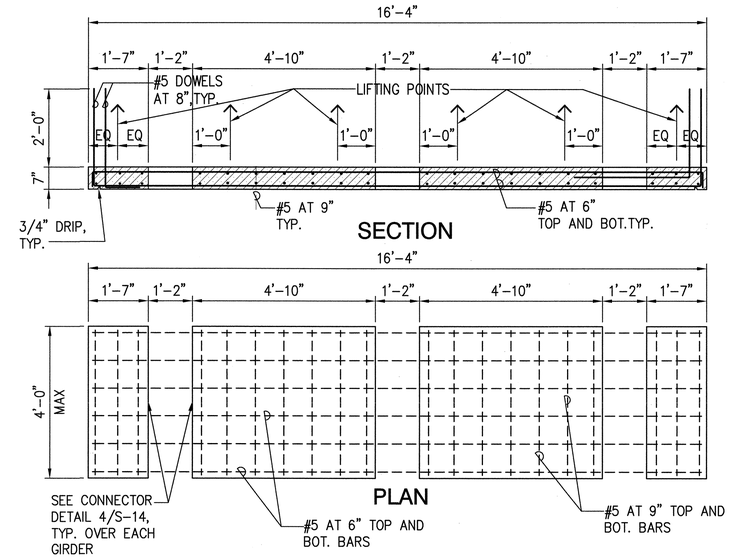

NOTES:

1. SEE 2/S-13 FOR JOINTS BETWEEN PANELS.
2. CONTRACTOR TO USE STRONGBACK OR OTHER LIFTING DEVICE TO TRANSPORT PRECAST DECK PANELS.

3 TYPICAL 7"x 48" MAX. PRECAST CONCRETE DECK FOR BRIDGE #3

S-14 SCALE: 1/2" = 1'-0"

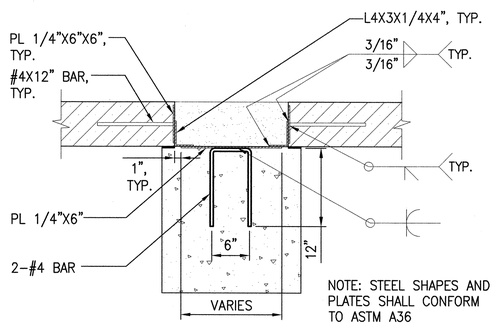

4 CONNECTION DETAIL

S-14 SCALE: 1" = 1'-0"

SUGGESTED CONSTRUCTION SEQUENCE:

1. THE FOLLOWING CONSTRUCTION SEQUENCE IS PROVIDED FOR GENERAL INFORMATION FOR THE CONTRACTOR. THE CONTRACTOR IS RESPONSIBLE FOR THE ACTUAL SEQUENCE OF CONSTRUCTION, AND ASSOCIATED MEANS AND METHODS TO COMPLETE THE WORK.
2. CONSTRUCT ABUTMENTS AND WINGWALLS FOR BRIDGE.
3. REMOVE SUPERSTRUCTURE OF EXISTING BRIDGE.
4. PLACE GIRDERS ON ABUTMENTS.
5. PLACE CONCRETE FOR END DIAPHRAGMS UP TO DIAPHRAGM CONSTRUCTION JOINT.
6. PLACE PRECAST PLANK ON DECK AND SECURE TO BEAM WITH L4X3 CONNECTOR BEFORE PLACING ADJACENT PLANK.
7. PLACE CONCRETE FOR LONGITUDINAL JOINT OVER GIRDER
8. GROUT TRANSVERSE DECK JOINT BETWEEN PRECAST PLANKS
9. CONSTRUCT BRIDGE RAILINGS
10. CONSTRUCT APPROACH SLAB

GRAPHIC SCALE:

1' 0 2' 4'

SCALE: 1/2" = 1'-0"

REVISION NO.	SYM.	DESCRIPTION	SHT./OF	DATE	APPROVED

MYRON G. OKUBO
LICENSED PROFESSIONAL ENGINEER
NO. 4320-S
HAWAII U.S.A.

04/30/18
EXPIRATION DATE OF THE LICENSE

THIS WORK WAS PREPARED BY ME OR UNDER MY SUPERVISION AND CONSTRUCTION OF THIS PROJECT WILL BE UNDER MY OBSERVATION.

STATE OF HAWAII
DEPARTMENT OF LAND AND NATURAL RESOURCES
ENGINEERING DIVISION

CAMP 10 ACCESS ROAD BRIDGES
WAIMEA, KAUAI, HAWAII

TYPICAL DETAILS

DESIGNED: LM	SUBMITTED:
DRAWN: NS/LC	DATE: APRIL 4, 2016
CHECKED: MO	SCALE: AS SHOWN
APPROVED: CHIEF ENGINEER	APR 2 6 2016 DATE

DRAWING NO. S-14

JOB NO. D01CK62A SHEET NO. 32 OF 32 SHEETS