Pomaikai Elementary School

South Kamehameha Avenue

Benchmark
PI Monument
6044.91 S
2726.22 E
Elev.=159.68' M.S.L.

39°49'15", 531.30'
("PP-2" To ℄ Walkway "B"
Sta. 9+50.37)

Maui Lani Subdivision

Control Pt.
"PP-2" (Mag Nail)
7170.53 S
4567.11 E
Elev.=153.39' M.S.L.

Amamuli Street

True North
1" = 120'

301°26'53" - 2158.09'
(PI Mon. To PP-2")

℄

6' High Chain Link Fence (Ph. 1)

Drainage Ditch & Berm (Ph. 1)

Berm Improvements

Project Limit

Phase 1
(N.I.C)

SBF1
(Ph. 1)

SBF2
(Ph. 2)

SBF3
(Ph. 1)

SBF4
(Ph. 2)

YBBF1
Bronco/Little League Field

YBBF2
Pony/Junior Field

Concession #2

YBBF3
Mustang/Li-Major Field

YBBF4
Mustang/Li-Major Field

℄ Walkway "B"

Retention Basin
(Ph. 1)

Retention Basin

R/W

Fence

Phase 3

Conc. Walkway

Soccer Field # 3

Soccer Field # 2

Soccer Field # 1

Restroom 2

Overflow Parking on Grass

Kuihelani Highway (State)

Cattle Gate,
See Inset 1, This Sht.
and Detail Sht. C-54

Speed Bump,
See Inset 2, This Sht.

Access Road (Ph. 1)

Well Site & Tank

Approx. Location
Archeological Site #6578

Phase 2
(N.I.C)

Access Road (Ph. 2)

Gravel Road Connection

Amended Gravel Emergency Access Road See Erosion Control Plan, Sht. C-6

Exist. 25' Waterline Easement in Favor of the Dept. of Water Supply

Approx. Location
Archeological Site #5504

Inset 1

Scale: 1" = 20'

66'

Cattle Gate Post
6145 S
2572 E

Cattle Gate Post
6128 S
2508 E

Inset 2

Scale: 1" = 20'

22 LF AC Speed Bump
6265 S
2701 E

Abbreviations

SBF – Softball Field
YBBF – Youth Baseball Field
Add. – Additive

Legend

Property Line
Exist. Easement
Project Limit
N.I.C. (Ph. 1 & Ph. 2)
Concrete Walkway
W4 Water Line & Size
SFM Sewer Force Main
D18 Drain Line & Size
W4 Existing Water Line & Size
SFM Existing Sewer Force Main
D18 Existing Drain Line & Size

Phase 3 Parking Stall Summary

Overflow Stalls	154
Total Parking Stall Count	154

General Site Plan

Scale: 1" = 120'

Graphic Scale:
1" = 120' 120' 60' 0' 120' 240'
Scale In Feet

REVISION NO.	SYM.	DESCRIPTION	SHT./OF	DATE	APPROVED
1	1	ADD. 1: REV. CATTLE GATE	1/17	1/20/16	

GORDON T. RING
LICENSED PROFESSIONAL ENGINEER
No. 9300-C
HAWAII, U.S.A.

THIS WORK WAS PREPARED BY ME OR UNDER MY SUPERVISION AND CONSTRUCTION OF THIS PROJECT WILL BE UNDER MY OBSERVATION.

SIGNATURE 4/30/16 EXP. DATE

R. M. TOWILL CORPORATION
Planning • Engineering • Environmental Services • Photogrammetry • Surveying • Construction Management
808 942 1133 2024 North King Street Suite 200 Honolulu, Hawaii 96819-3466

STATE OF HAWAII
DEPARTMENT OF LAND AND NATURAL RESOURCES
ENGINEERING DIVISION

CENTRAL MAUI REGIONAL SPORTS COMPLEX
PHASE 3
WAILUKU, MAUI, HAWAII

GENERAL SITE PLAN

DESIGNED: GR/NN/JP		SUBMITTED:	
DRAWN: GR/NN/JP		DATE: DECEMBER 2015	
CHECKED: GTR		SCALE: AS SHOWN	
APPROVED: CHIEF ENGINEER	JAN 20 2016 DATE	DRAWING NO.	C-3

JOB NO. F93C817D

SHEET NO. 5 OF 90 SHEETS

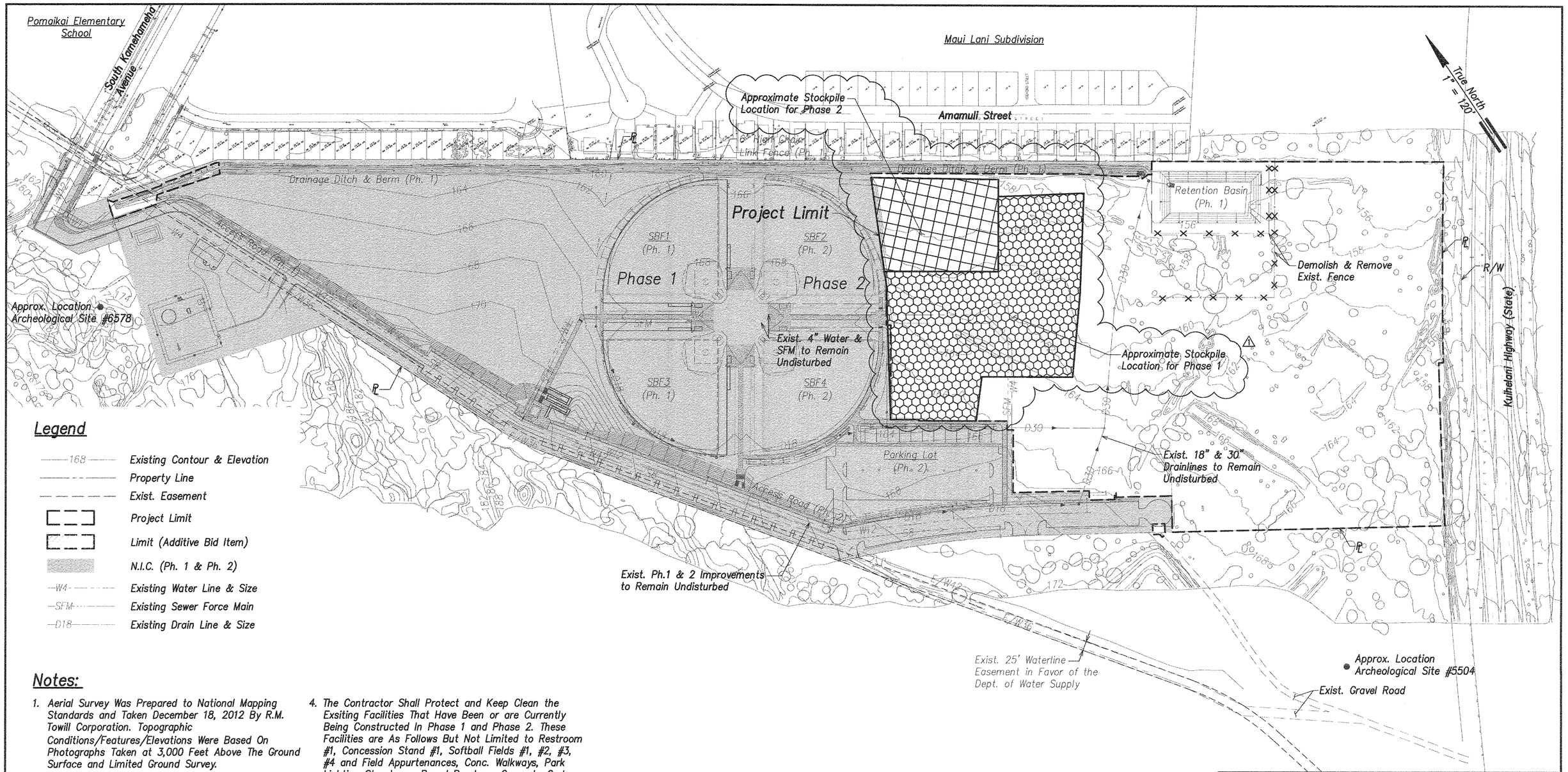

Legend

- 168 — Existing Contour & Elevation
- Property Line
- Exist. Easement
- Project Limit
- Limit (Additive Bid Item)
- N.I.C. (Ph. 1 & Ph. 2)
- W4 — Existing Water Line & Size
- SFM — Existing Sewer Force Main
- D18 — Existing Drain Line & Size

Notes:

1. Aerial Survey Was Prepared to National Mapping Standards and Taken December 18, 2012 By R.M. Towill Corporation. Topographic Conditions/Features/Elevations Were Based On Photographs Taken at 3,000 Feet Above The Ground Surface and Limited Ground Survey.
2. The Contractor Shall Be Responsible For Verifying Existing Conditions Prior to the Start of Clearing & Grubbing. Starting Clearing & Grubbing Indicates Acceptance of All Grades.
3. The Contractor Shall Be Responsible For Clearing, Grubbing, and Disposal Of All Weeds, Brush, Roots, Trees, Debris, and Any Other Deleterious Material Within The Project Site. Material Shall Be Dumped at a State of Hawaii Approved Dump Site.
4. The Contractor Shall Protect and Keep Clean the Exsiting Facilities That Have Been or are Currently Being Constructed In Phase 1 and Phase 2. These Facilities are As Follows But Not Limited to Restroom #1, Concession Stand #1, Softball Fields #1, #2, #3, #4 and Field Appurtenances, Conc. Walkways, Park Lighting Structures, Paved Roadway, Concrete Curb and Gutters, All Mechanical Equipment Including Booster Pump, Irrigation Tank, and Irrigation Well Facility Including Pump and Appurtenances.
5. The Phase 2 stockpile area shown on this sheet is currently under construction. When complete, the Phase 2 & Exist. Phase 1 stockpiles are anticipated to contain approximately 7,000 CY of material. Actual material quantity will vary. The contractor shall be responsible for balancing the earthwork quantities onsite by adjusting the depth of the retention basin. The Contractor shall account for any potential stockpile discrepancies in their bid. No additional change orders will be issued due to variations associated with the Phase 1 or 2 stockpile. △1

Existing Conditions and Demolition Plan

Scale: 1" = 120'

Graphic Scale:

1" = 120' — 120' 60' 0' 120' 240' — Scale In Feet

REVISION NO.	SYM.	DESCRIPTION	SHT./OF	DATE	APPROVED
1	△1	ADD. 1: ADDED PH. 1 STOCKPILE LIMITS	2/17	1/20/16	

GORDON T. RING — LICENSED PROFESSIONAL ENGINEER No. 9300-C — HAWAII, U.S.A.

THIS WORK WAS PREPARED BY ME OR UNDER MY SUPERVISION AND CONSTRUCTION OF THIS PROJECT WILL BE UNDER MY OBSERVATION.

SIGNATURE — 4/30/16 EXP. DATE

R. M. TOWILL CORPORATION
Planning • Engineering • Environmental Services • Photogrammetry • Surveying • Construction Management
808 842 1133 2024 North King Street Suite 200 Honolulu, Hawaii 96819-3456

STATE OF HAWAII
DEPARTMENT OF LAND AND NATURAL RESOURCES
ENGINEERING DIVISION

CENTRAL MAUI REGIONAL SPORTS COMPLEX
PHASE 3
WAILUKU, MAUI, HAWAII

EXISTING CONDITIONS AND DEMOLITION PLAN

DESIGNED: GR/NN/JP		SUBMITTED:	
DRAWN: GR/NN/JP		DATE: DECEMBER 2015	
CHECKED: GTR		SCALE: AS SHOWN	
APPROVED: CHIEF ENGINEER	JAN 20 2016 DATE		DRAWING NO. C-4

JOB NO. F93C817D

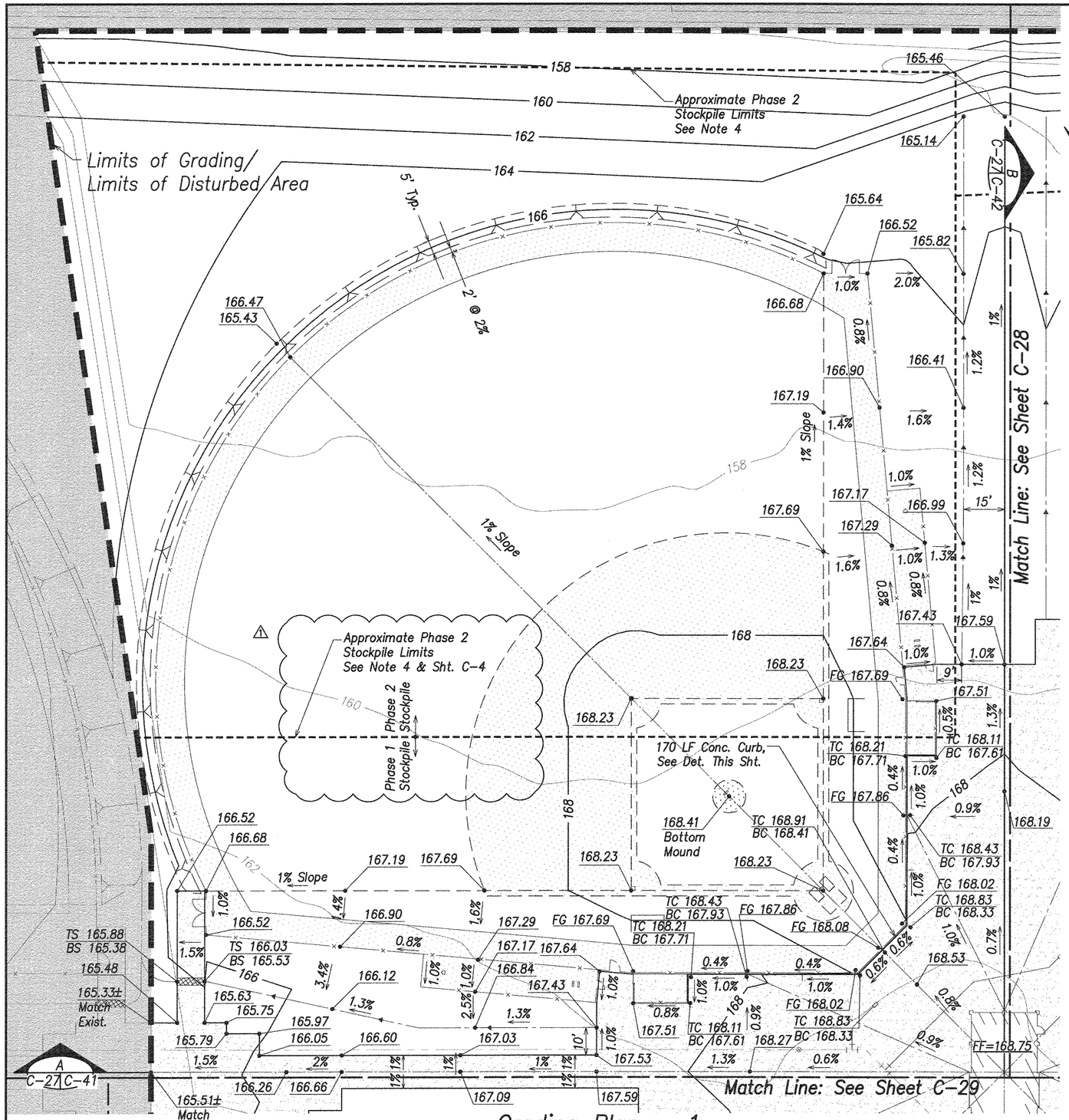

Grading Plan – 1

Scale: 1" = 20'

Legend

Property Line	Exist. Contour
Exist. Easement	Finished Contour
Grading Limit	Top Bank
N.I.C. (Ph. 1 & Ph. 2)	Bottom Bank
Concrete Walkway	Slope
D18 Drain Line & Size	FF=166 Finish Floor Elevation
D18 Existing Drain Line & Size	165.36 Finish Spot Elevation
× 157.5 Existing Spot Elevation and Location	TC 165.36 / BC 164.86 Top Curb/ Bottom Curb Elevation
	TS 165.36 / BS 164.86 Top Sidewalk/ Bottom Sidewalk Elevation
	FG 164.53 Field Grade Elevation
	6" Conc. Curb

Earthwork Summary

(For Permit Purposes Only)

	Area to be Graded (Acres)	Area to be Disturbed (Acres)	Excavation (cy.)	Embankment (cy.)	Approx. Stockpile From Ph. 1 & Ph. 2	Net Excavation (cy.)
Base Bid (Incl. Youth Fields, Soccer Fields, Retention Basin and Overflow Parking	27.4	27.4	70,000	77,000	7,000	0

Notes:

1. Quantities shown for permitting purposes only. Contractor is responsible for verifying quantities.
2. Earthwork quantities are calculated to the finished subgrades shown on the plans and includes 1 foot of soil losses due to clearing and grubbing. Quantities do not include overexcavation of unsuitable material and/or losses due to shrinkage.
3. Finish grades for areas to be hydroseeded include topsoil layer.
4. The Phase 2 stockpile area shown on this sheet is currently under construction. When complete, the Phase 2 & Exist. Phase 1 stockpiles are anticipated to contain approximately 7,000 CY of material. Actual material quantity will vary. The contractor shall be responsible for balancing the earthwork quantities onsite by adjusting the depth of the retention basin. The Contractor shall account for any potential stockpile discrepancies in their bid. No additional change orders will be issued due to variations associated with the Phase 1 or 2 stockpile.

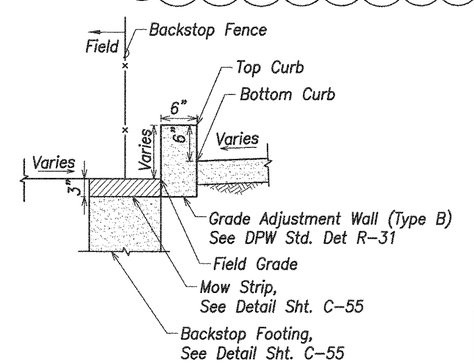

Typ. Curb Section

Scale: 1" = 1'

Note:
For all Concrete Curbs, Provide Contraction Joints at 5' Apart & Expansion Joints at 50' Apart.

Graphic Scale:
1" = 20' 20' 10' 0' 20' 40'
Scales In Feet

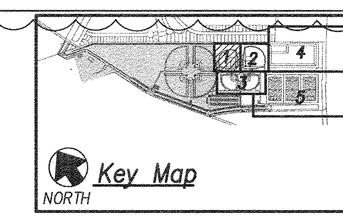

Key Map

REVISION NO.	SYM.	DESCRIPTION	SHT./OF	DATE	APPROVED
1	△1	ADD. 1: ADDED PH. 1 STOCKPILE LIMITS, REV EARTHWORK	3/17	1/20/16	

GORDON T. RING
LICENSED PROFESSIONAL ENGINEER
No. 9300-C
HAWAII, U.S.A.

THIS WORK WAS PREPARED BY ME OR UNDER MY SUPERVISION AND CONSTRUCTION OF THIS PROJECT WILL BE UNDER MY OBSERVATION.

SIGNATURE 4/30/16 EXP. DATE

R. M. TOWILL CORPORATION

STATE OF HAWAII
DEPARTMENT OF LAND AND NATURAL RESOURCES
ENGINEERING DIVISION

CENTRAL MAUI REGIONAL SPORTS COMPLEX
PHASE 3
WAILUKU, MAUI, HAWAII

GRADING PLAN – 1

DESIGNED: GR/NN/JP	SUBMITTED:
DRAWN: GR/NN/JP	DATE: DECEMBER 2015
CHECKED: GTR	SCALE: AS SHOWN
APPROVED: CHIEF ENGINEER	JAN 20 2016 DATE
	DRAWING NO. C-27

Limits of Grading/
Limits of Disturbed Area

Match Line: Sheet C-27

Match Line: Sheet C-30

Match Line: See Sheet C-29

Approximate Phase 1 Stockpile Limits See Sht. C-27 Note 4 & Sht. C-4

Phase 1 Stockpile

168.70 Bottom Mound

209 LF 6" Conc. Curb See Det. Sht. C-27

1% Slope

Exist. DMH

5' Typ.

True North 1" = 20'

Legend

Property Line	
Exist. Easement	
Grading Limit	
N.I.C. (Ph. 1 & Ph. 2)	
Concrete Walkway	
D18	Drain Line & Size
D18	Existing Drain Line & Size
× 157.5	Existing Spot Elevation and Location
180	Exist. Contour
180	Finished Contour
	Top Bank
	Bottom Bank
Y Y Y	Slope
FF=166	Finish Floor Elevation
165.36	Finish Spot Elevation
TC 165.36 BC 164.86	Top Curb/ Bottom Curb Elevation
FG 164.53	Field Grade Elevation
	6" Conc. Curb

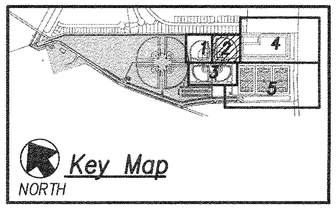

Grading Plan – 2

Scale: 1" = 20'

Graphic Scale:
1" = 20'
20' 10' 0' 20' 40'
Scales In Feet

REVISION NO.	SYM.	DESCRIPTION	SHT./OF	DATE	APPROVED
1	⚠	ADD. 1: ADDED PH. 1 STOCKPILE LIMITS	4/17	1/20/16	GP

GORDON T. RING
LICENSED PROFESSIONAL ENGINEER
No. 9300-C
HAWAII, U.S.A.

THIS WORK WAS PREPARED BY ME OR UNDER MY SUPERVISION AND CONSTRUCTION OF THIS PROJECT WILL BE UNDER MY OBSERVATION.

SIGNATURE 4/30/16 EXP. DATE

R. M. TOWILL CORPORATION
Parks · Celebrity · Landmark Series · Fishponds · Group · Celebrity Sponsor
808 842 1133 2024 North King Street, Suite 200 Honolulu, Hawaii 96819-3484

STATE OF HAWAII
DEPARTMENT OF LAND AND NATURAL RESOURCES
ENGINEERING DIVISION

CENTRAL MAUI REGIONAL SPORTS COMPLEX
PHASE 3
WAILUKU, MAUI, HAWAII

GRADING PLAN – 2

DESIGNED:	GR/NN/JP	SUBMITTED:	-- GP
DRAWN:	GR/NN/JP	DATE:	DECEMBER 2015
CHECKED:	GTR	SCALE:	AS SHOWN
APPROVED: CHIEF ENGINEER		JAN 20 2016 DATE	DRAWING NO. C-28

JOB NO. F93C817D

SHEET NO.17 OF 90 SHEETS

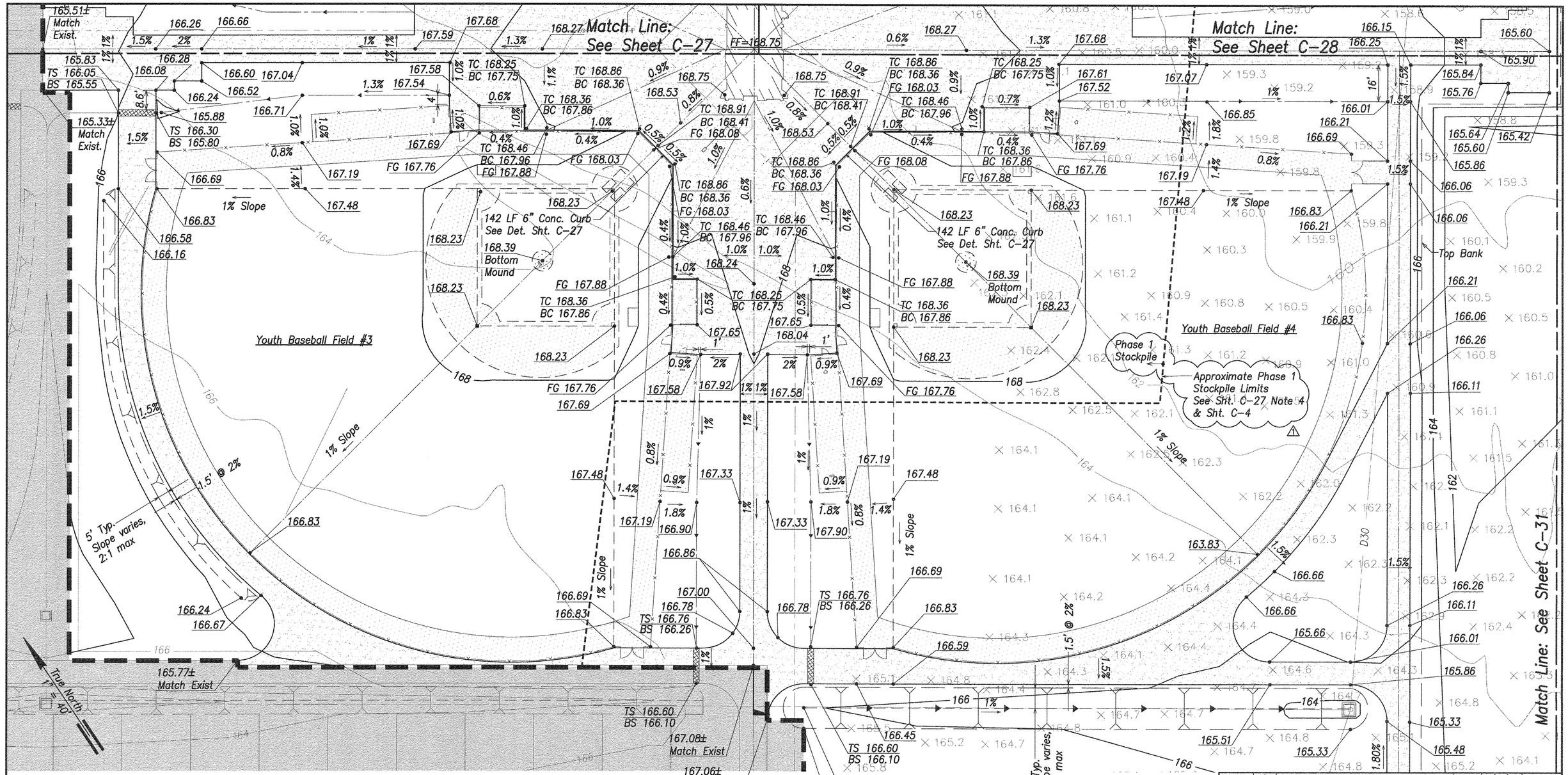

Legend

Property Line	
Exist. Easement	
Grading Limit	
N.I.C. (Ph. 1 & Ph. 2)	
Concrete Walkway	
D18	Drain Line & Size
D18	Existing Drain Line & Size
× 157.5	Existing Spot Elevation and Location
180	Exist. Contour
180	Finished Contour
	Top Bank
	Bottom Bank
Y Y Y	Slope
FF=166	Finish Floor Elevation
165.36	Finish Spot Elevation
	6" Conc. Curb
TC 165.36 / BC 164.86	Top Curb/ Bottom Curb Elevation
FG 164.53	Field Grade Elevation
TS 165.36 / BS 164.86	Top Sidewalk/ Bottom Sidewalk Elevation

Grading Plan – 3

Scale: 1" = 20'

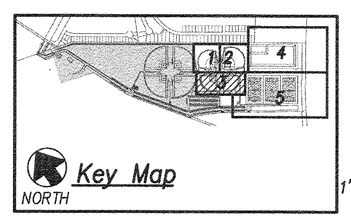

1" = 20'

Graphic Scale: 20' 10' 0' 20' 40'

Scales In Feet

REVISION NO.	SYM.	DESCRIPTION	SHT./OF	DATE	APPROVED
1	1	ADD. 1: ADDED PH. 1 STOCKPILE LIMITS	5/17	1/20/16	

GORDON T. RING LICENSED PROFESSIONAL ENGINEER No. 9300-C HAWAII, U.S.A.

THIS WORK WAS PREPARED BY ME OR UNDER MY SUPERVISION AND CONSTRUCTION OF THIS PROJECT WILL BE UNDER MY OBSERVATION.

SIGNATURE 4/30/16 EXP. DATE

R. M. TOWILL CORPORATION

STATE OF HAWAII
DEPARTMENT OF LAND AND NATURAL RESOURCES
ENGINEERING DIVISION

CENTRAL MAUI REGIONAL SPORTS COMPLEX
PHASE 3
WAILUKU, MAUI, HAWAII

GRADING PLAN – 3

DESIGNED: GR/NN/JP	SUBMITTED:
DRAWN: GR/NN/JP	DATE: DECEMBER 2015
CHECKED: GTR	SCALE: AS SHOWN
APPROVED: CHIEF ENGINEER	JAN 20 2016 DATE
	DRAWING NO. C-29

JOB NO. F93C817D

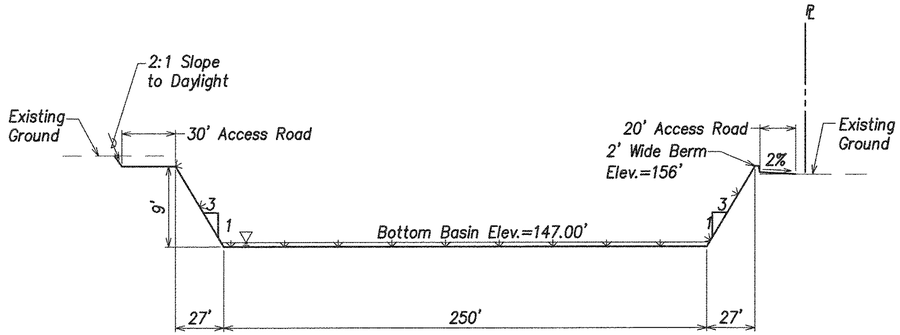

Section A C-30 | C-51
Scales: Hor: 1"=40'
Vert: 1"=8'

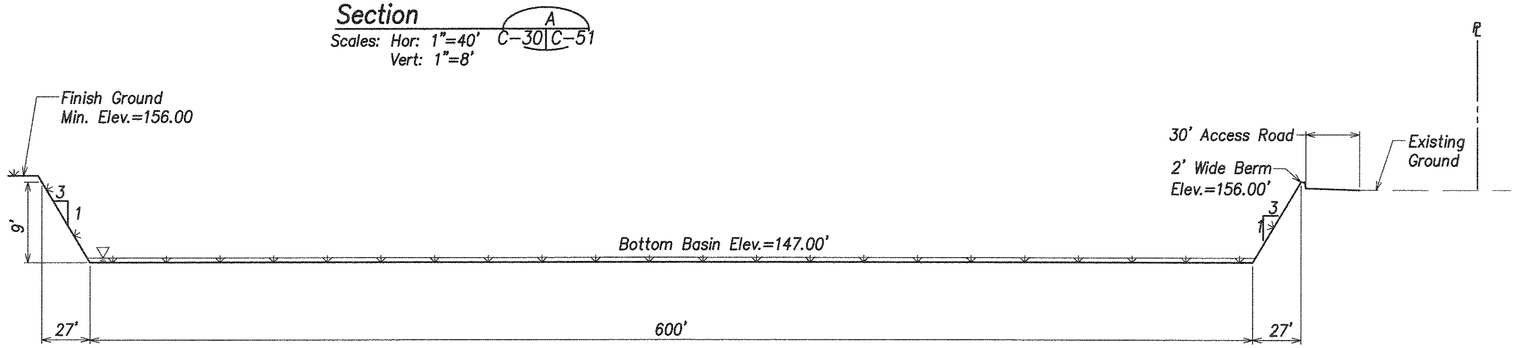

Section B C-30 | C-51
Scales: Hor: 1"=40'
Vert: 1"=8'

Retention Basin Section

Note:
All Exposed Areas Shall Be Grassed

Distance from top of cut or bottom of fill to property line:	
Height of Cut or Fill	Distance from Property Line
0' to 2'	1'
more than 2' to 4'	2'
more than 4' to 6'	3'
more than 6' to 10'	4'
more than 10' to 15'	5'
more than 15'	8'

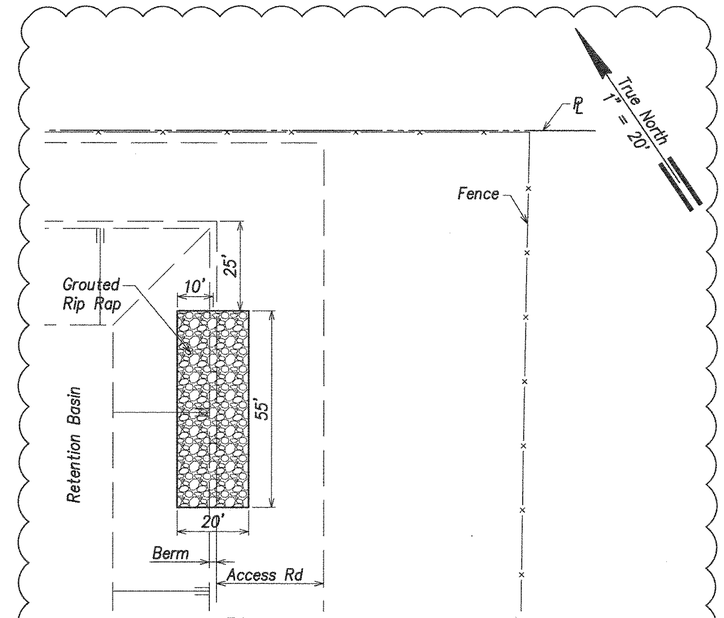

Plan
Scale: 1"=20'

Emergency Overflow Spillway Plan

BASIN EXCAVATION NOTES:

1. The project earthwork quantities shown on sheet C-27 are based on a retention basin depth of 9 feet. The contractor shall adjust the basin depth as required to balance the onsite fill material needs. This effort shall be considered incidental to the contract earthwork pay items. No additional compensation will be allowed.
2. Contractor is responsible for verifying the actual conditions and dimensionS of the existing retention basin. The Contractor shall account for any potential discrepancies in their bid. No additional change orders will be issued due to retention basin location and deviations.

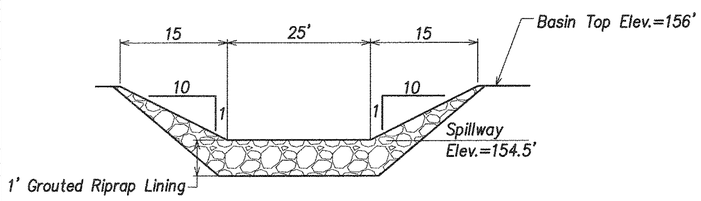

Section C C-30 | C-51
Scales: Hor: 1"=10'
Vert: 1"=2'

Emergency Overflow Spillway Section

Graphic Scales:

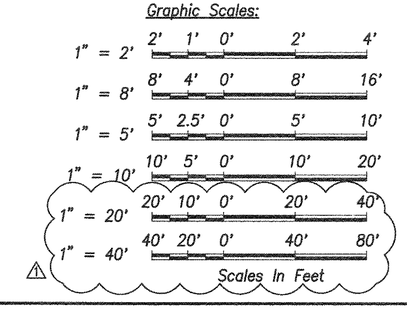

REVISION NO.	SYM.	DESCRIPTION	SHT./OF	DATE	APPROVED
1	△1	ADD. 1: REV. BASIN SPILLWAY	6/17	1/20/16	

GORDON T. RING LICENSED PROFESSIONAL ENGINEER No. 9300-C HAWAII, U.S.A.

THIS WORK WAS PREPARED BY ME OR UNDER MY SUPERVISION AND CONSTRUCTION OF THIS PROJECT WILL BE UNDER MY OBSERVATION.

SIGNATURE 4/30/16 EXP. DATE

R. M. TOWILL CORPORATION

STATE OF HAWAII
DEPARTMENT OF LAND AND NATURAL RESOURCES
ENGINEERING DIVISION

CENTRAL MAUI REGIONAL SPORTS COMPLEX
PHASE 3
WAILUKU, MAUI, HAWAII

DRAINAGE DETAILS

DESIGNED: GR/NN/JP	SUBMITTED: --
DRAWN: GR/NN/JP	DATE: DECEMBER 2015
CHECKED: GTR	SCALE: AS SHOWN
APPROVED: CHIEF ENGINEER	JAN 20 2016 DATE

DRAWING NO. C-51

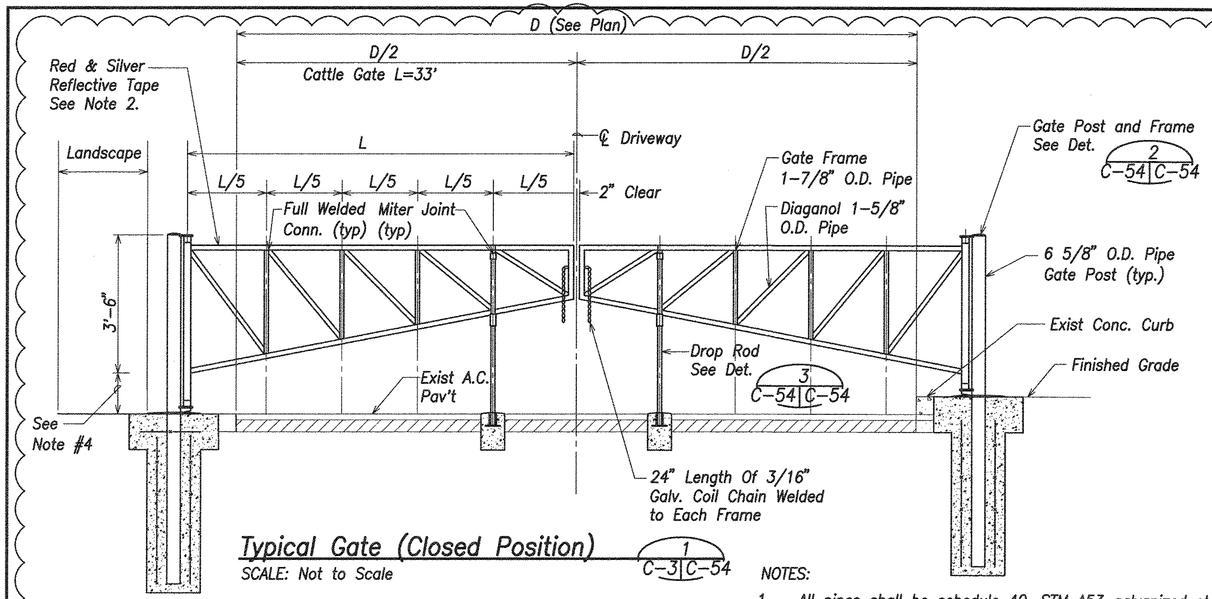

Typical Gate (Closed Position)

SCALE: Not to Scale — 1 C-3 C-54

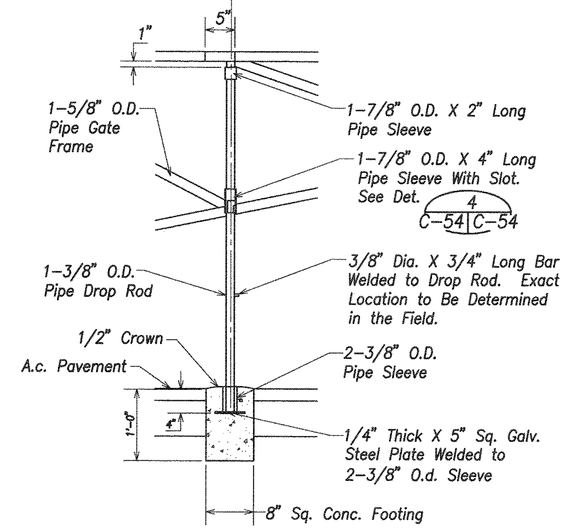

Drop Rod

SCALE: 1" = 1'-0" — 3 C-54 C-54

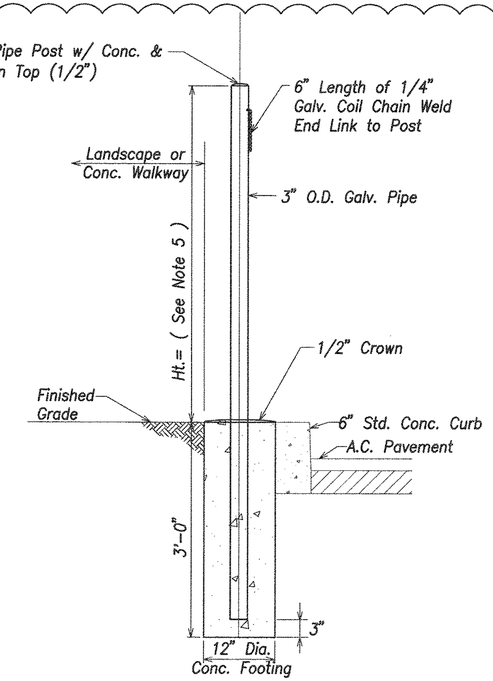

Gate Holdback Post

SCALE: 1" = 1'-0" — 5 C-54 C-54

NOTES:

1. All pipes shall be schedule 40, STM A53 galvanized steel.
2. Wrap reflective tape around entire pipe gate frames and posts. Alternate 12" bands of red and silver.
3. Provide 2 padlocks for each gate. Padlocks shall be keyed alike.
4. Adjust clear dimension to make both frames level to each other and to allow clearances for gate swing.
5. Height of holdback post to match height of gate in the open position unless otherwise indicated.
6. All concrete footings shall be Class "B" concrete.

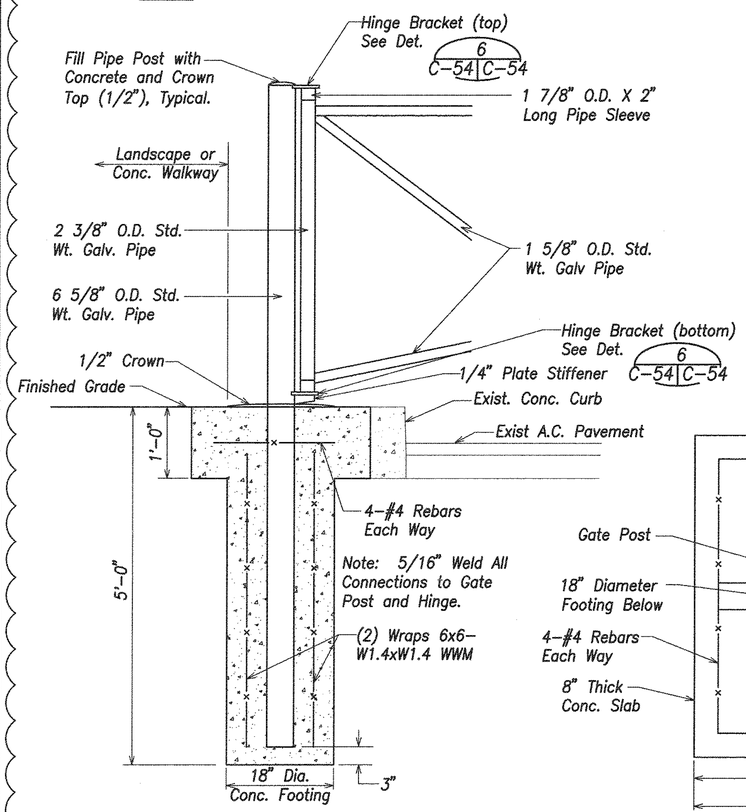

Gate Post and Frame

SCALE: 1" = 1'-0" — 2 C-54 C-54

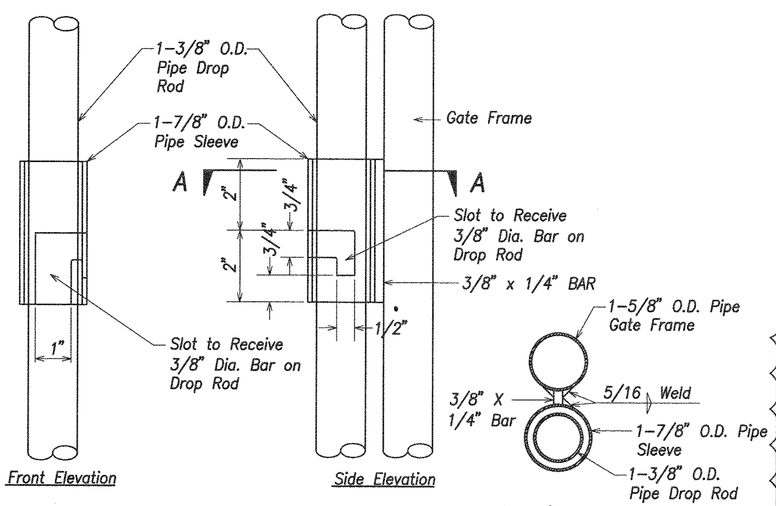

Pipe Sleeve With Slot

SCALE: 6" = 1'-0" — 4 C-54 C-54

Section A-A

NOT TO SCALE

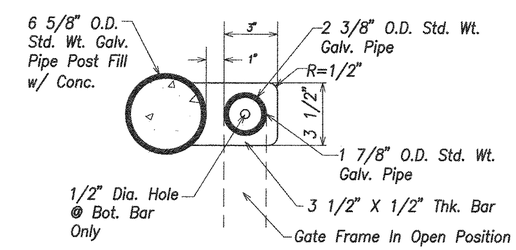

Hinge Bracket

SCALE: 3" = 1'-0" — 6 C-54 C-54

REVISION NO.	SYM.	DESCRIPTION	SHT./OF	DATE	APPROVED
1	△	ADD. 1: REV. CATTLE GATE DETAIL	7/17	1/20/16	

GORDON T. RING LICENSED PROFESSIONAL ENGINEER No. 9300-C HAWAII, U.S.A.

THIS WORK WAS PREPARED BY ME OR UNDER MY SUPERVISION AND CONSTRUCTION OF THIS PROJECT WILL BE UNDER MY OBSERVATION.

SIGNATURE — 4/30/16 EXP. DATE

R. M. TOWILL CORPORATION

STATE OF HAWAII
DEPARTMENT OF LAND AND NATURAL RESOURCES
ENGINEERING DIVISION

CENTRAL MAUI REGIONAL SPORTS COMPLEX
PHASE 3
WAILUKU, MAUI, HAWAII

CATTLE GATE DETAILS

DESIGNED: GR/NN/JP		SUBMITTED: --	
DRAWN: GR/NN/JP		DATE: DECEMBER 2015	
CHECKED: GTR		SCALE: AS SHOWN	
APPROVED: CHIEF ENGINEER	JAN 20 2016 DATE		DRAWING NO. C-54

JOB NO. F93C817D

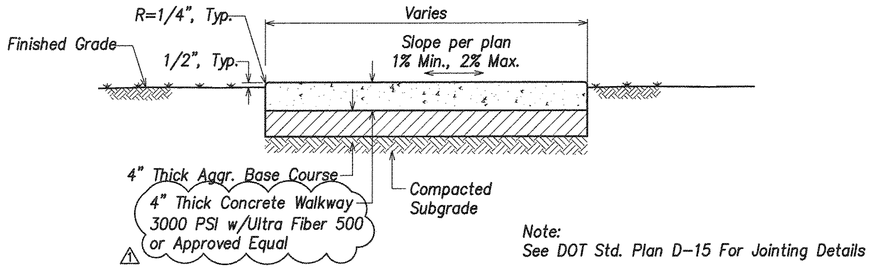

Note:
See DOT Std. Plan D-15 For Jointing Details

Concrete Sidewalk
Not to Scale

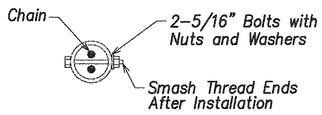

REFLECTOR DETAIL

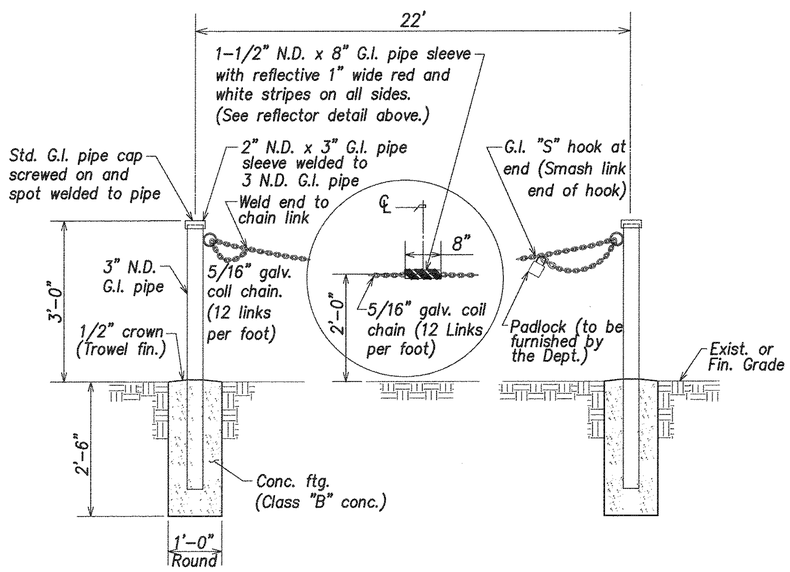

NOTES:

1. All welded connections shall be painted with two coats of Z.R.C. cold galvanizing compound.
2. "S" hooks shall be 5/16"ø with tip tapered to 3/16".
3. No splicing shall be allowed on G.I. pipe posts.
4. All pipe sizes are nominal diameter (N.D.).

Access Chain Barrier Detail
Not to Scale

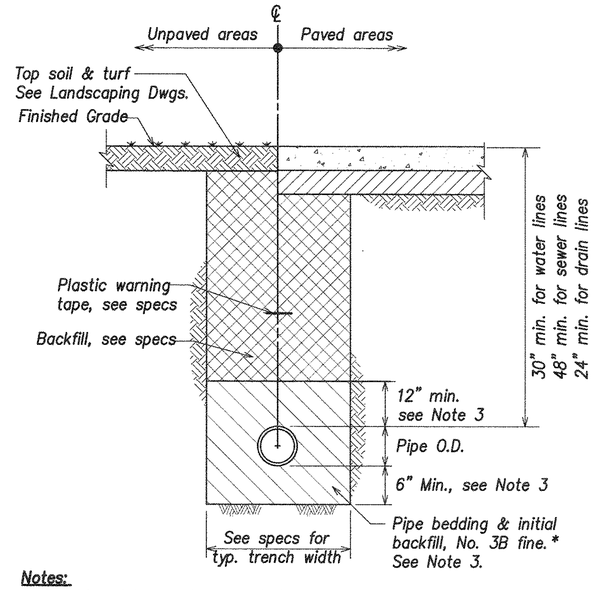

Notes:

1. Provide minimum clearance between water crossing over sewer lines of 12".
2. For pipes larger than 24" in diameter provide 12" of bedding below pipe.
3. For waterline installation, see DWS Std. Det. P10 for pipe bedding & initial backfill requirements.

Trench Restoration Detail
Not to Scale

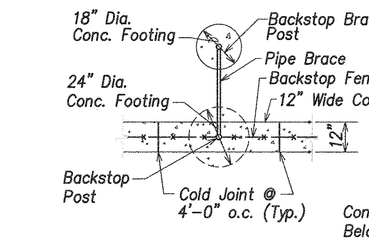

Plan

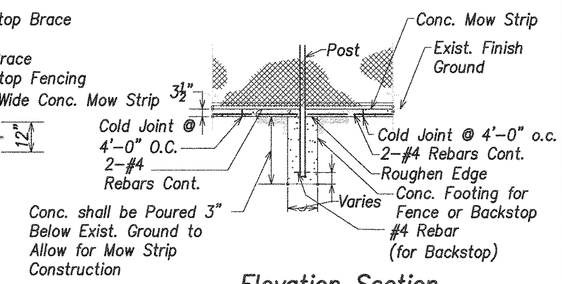

Elevation Section

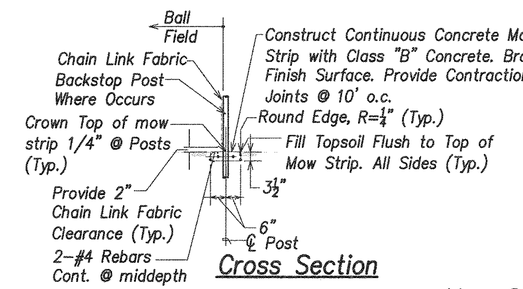

Cross Section

Note:
Recess top of post footing as required to construct continuous 3 1/2" thick concrete mow strip

Mow Strip
Not to Scale

REVISION NO.	SYM.	DESCRIPTION	SHT./OF	DATE	APPROVED
1	1	ADD. 1: REV. CONC. SIDEWALK	8/17	1/20/16	GC DL

GORDON T. RING
LICENSED PROFESSIONAL ENGINEER
No. 9300-C
HAWAII, U.S.A.

THIS WORK WAS PREPARED BY ME OR UNDER MY SUPERVISION AND CONSTRUCTION OF THIS PROJECT WILL BE UNDER MY OBSERVATION.

SIGNATURE 4/30/16 EXP. DATE

R. M. TOWILL CORPORATION
Planning • Engineering • Surveying • Mapping • Environmental Services • Photogrammetry • Remote Sensing • Geographic Information Systems
828 Fort Street Mall, Suite 600 Honolulu, Hawaii 96813-3884

STATE OF HAWAII
DEPARTMENT OF LAND AND NATURAL RESOURCES
ENGINEERING DIVISION

CENTRAL MAUI REGIONAL SPORTS COMPLEX
PHASE 3
WAILUKU, MAUI, HAWAII

MISC. DETAILS

DESIGNED:	GR/NN/JP	SUBMITTED:	-- GC DL
DRAWN:	GR/NN/JP	DATE:	DECEMBER 2015
CHECKED:	GTR	SCALE:	AS SHOWN
APPROVED: CHIEF ENGINEER		JAN 20 2016 DATE	DRAWING NO. C-55

JOB NO. F93C817D

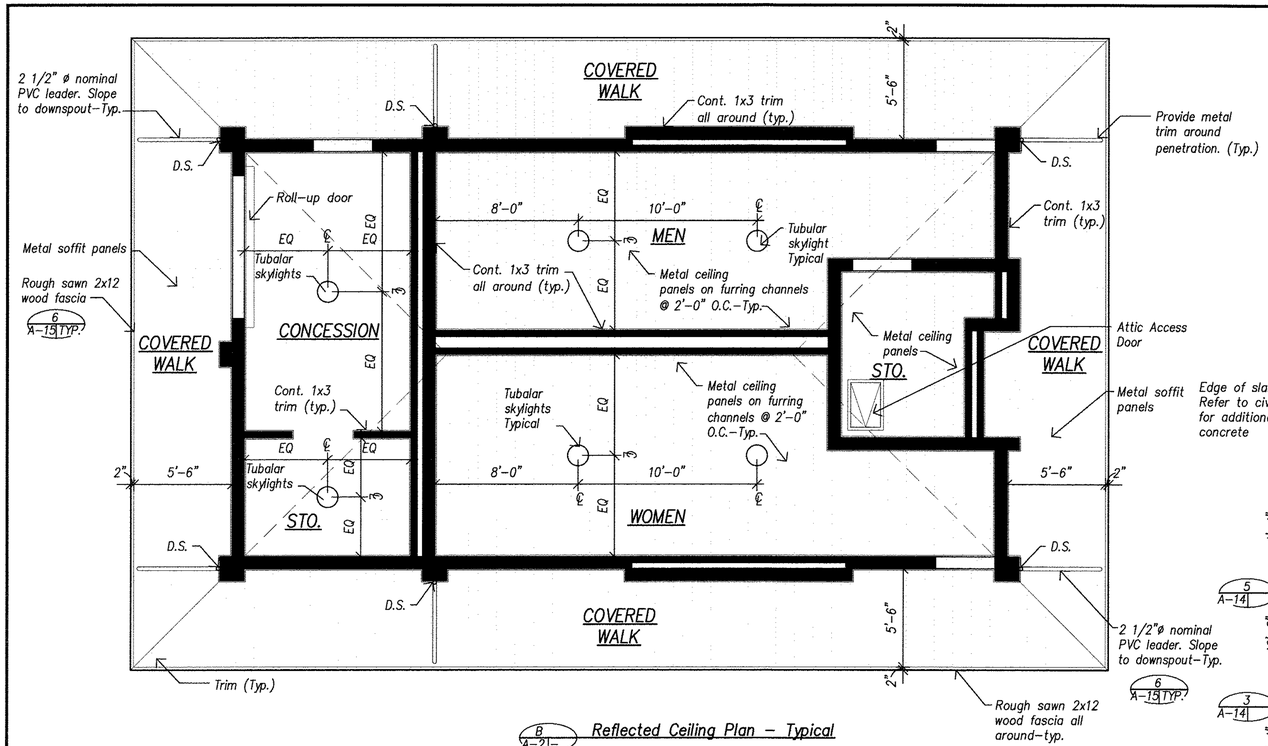

B A-2 Reflected Ceiling Plan – Typical

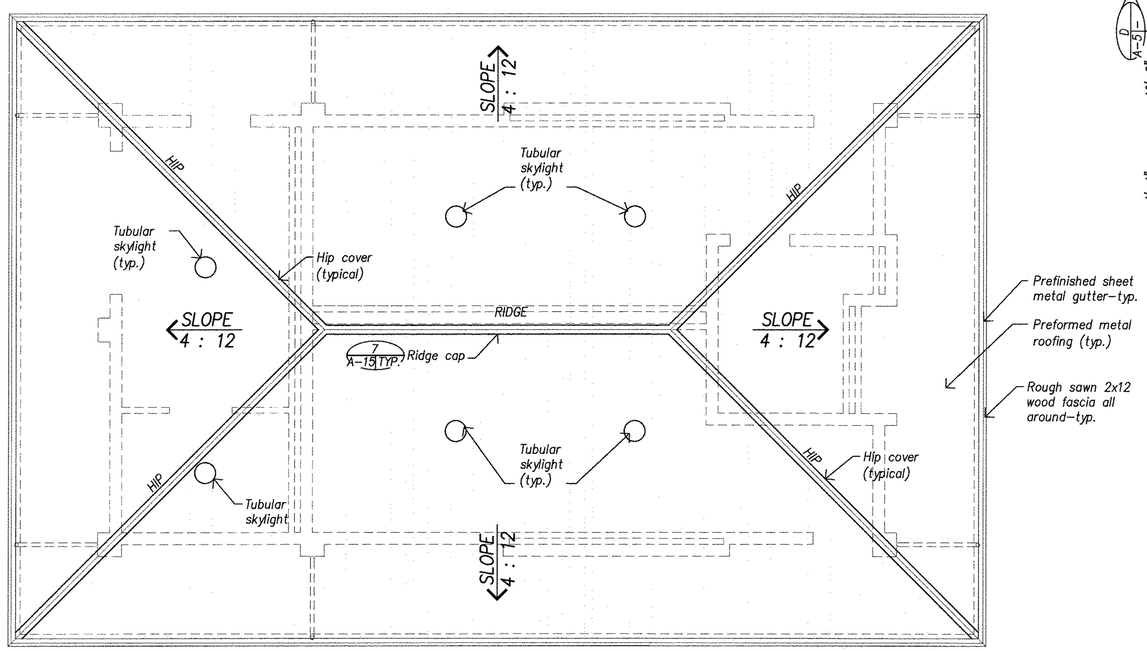

C A-2 Roof Plan – Typical

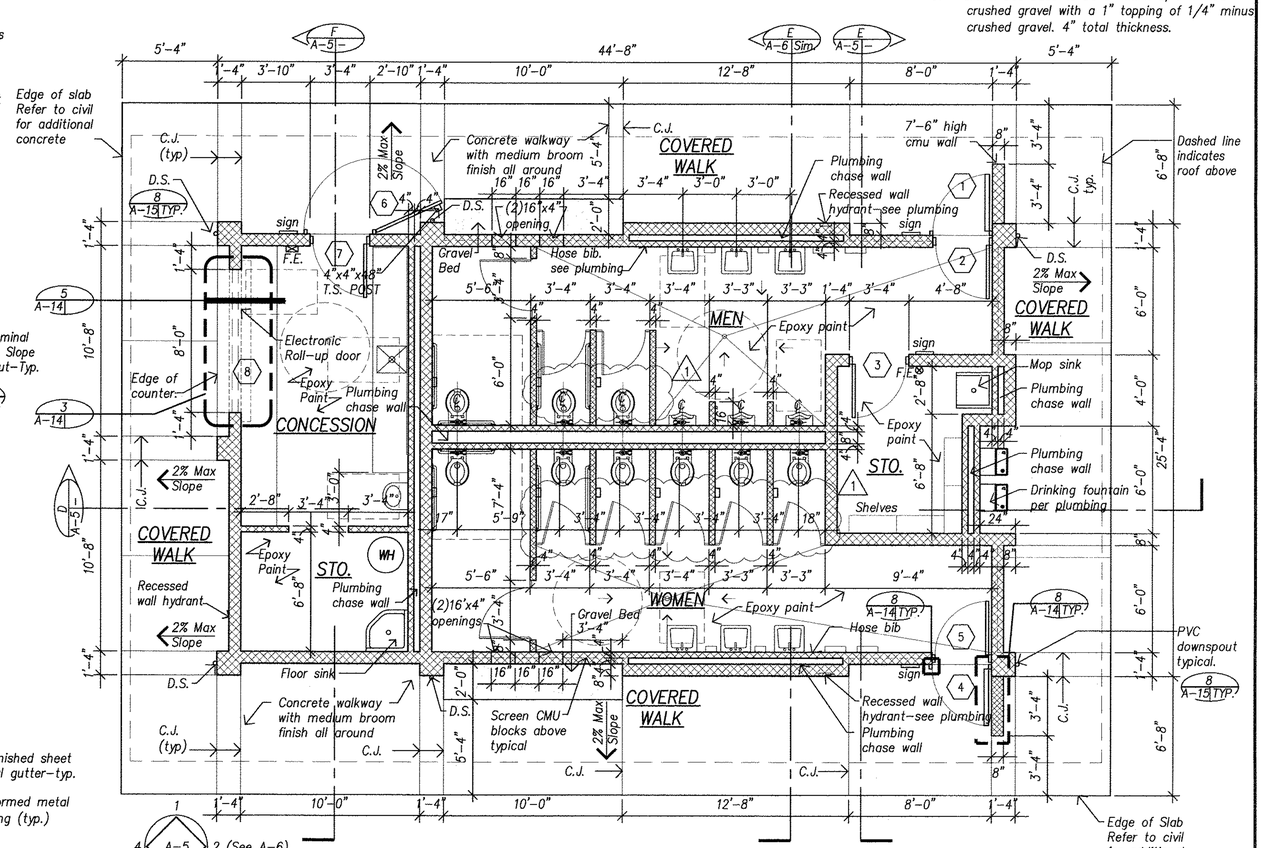

A A-2 Concession Floor Plan – Typical

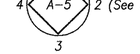

Key To Elevations

Sheet Notes

1. All ceiling to be metal ceiling panels.
2. See sheet A/A-12 for accessible heights plumbing fixtures and accessories.
3. See detail 2/A-15 for tubular skylight details.
4. Floor finish and wall finish for Men's, Women's, Storage, Concession, and Concession Storage shall be epoxy paint throughout. See specifications.
5. Exterior concrete finish shall be Medium Broom Finish.
6. All cross slopes on walkways shall be at 2% maximum.
7. All control joints (C.J.) shown on concrete surfaces shall be tooled joints. See structural drawings for locations of expansion joints.
8. See civil site plan for building orientation.
9. Gravel bed base to be 3" think 3/4" minus crushed gravel with a 1" topping of 1/4" minus crushed gravel. 4" total thickness.

REVISION NO.	SYM.	DESCRIPTION	SHT./OF	DATE	APPROVED
1	1	RELOCATED TPH	9/17	1/20/2016	

ALVIN M. YOSHIMORI LICENSED PROFESSIONAL ARCHITECT No. 2714 HAWAII, U.S.A.

LICENSE EXPIRATION DATE: 4-30-2016

THIS WORK WAS PREPARED BY ME OR UNDER MY SUPERVISION. CONSTRUCTION OF THIS PROJECT WILL BE UNDER MY OBSERVATION.

(Observation of Construction as defined in the Hawaii Administrative Rules, Dept. of Commerce and Consumer Affairs, Professional Engineers, Architects, Surveyors and Landscape Architects)

SIGNATURE DATE

STATE OF HAWAII
DEPARTMENT OF LAND AND NATURAL RESOURCES
ENGINEERING DIVISION

CENTRAL MAUI REGIONAL SPORTS COMPLEX
PHASE 3
WAILUKU, MAUI, HAWAII

CONCESSION FLOOR, RCP, ROOF PLAN

DESIGNED: AY	SUBMITTED: AY
DRAWN: LE, RA	DATE: DECEMBER 2015
CHECKED: AY	SCALE: 1/4" = 1'-0"
APPROVED: CHIEF ENGINEER	JAN 20 2016 DATE
	DRAWING NO. A-2

JOB NO. F93C817D

Sheet Notes

1. All ceiling to be metal ceiling panels.
2. See sheet A/A-12 for accessible heights plumbing fixtures and accessories.
3. See detail 2/A-15 for tubular skylight details.
4. Floor finish and wall finish for Men's, Women's, Storage shall be epoxy paint throughout. See specifications.
5. Exterior concrete finish shall be Medium Broom Finish.
6. All cross slopes on walkways shall be at 2% maximum.
7. All control joints (C.J.) shown on concrete surfaces shall be tooled joints. See structural drawings for locations of expansion joints.
8. See civil site plan for building orientation.
9. Gravel bed base to be 3" think 3/4" minus crushed gravel with a 1" topping of 1/4" minus crushed gravel. 4" total thickness.

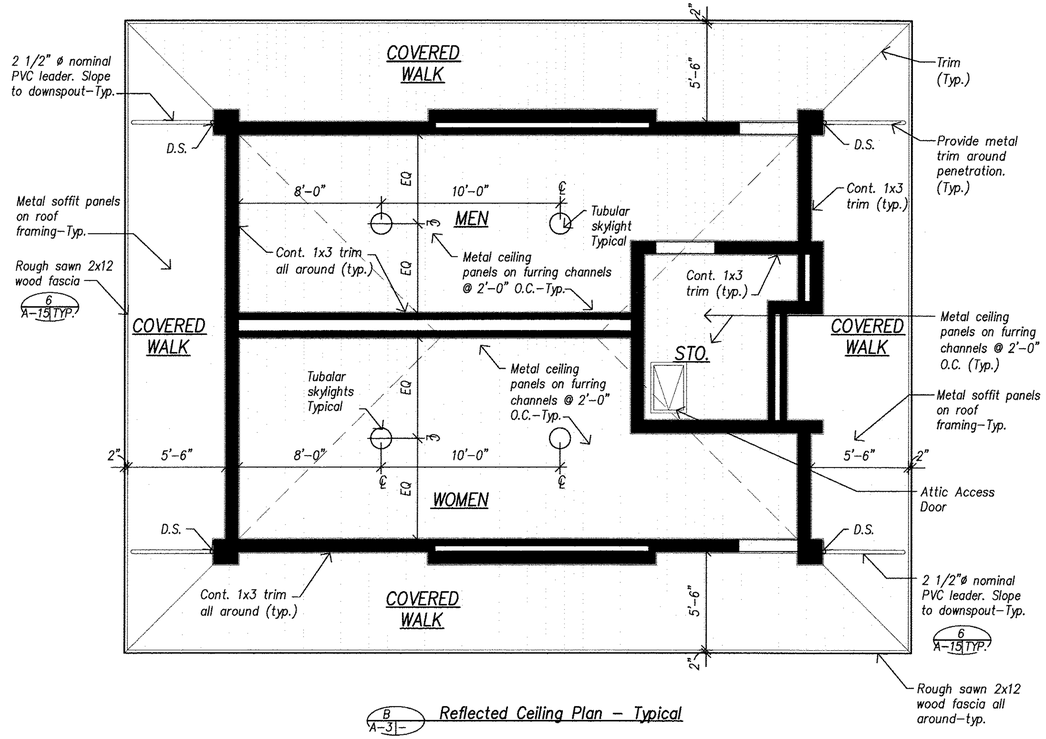

B/A-3 Reflected Ceiling Plan – Typical

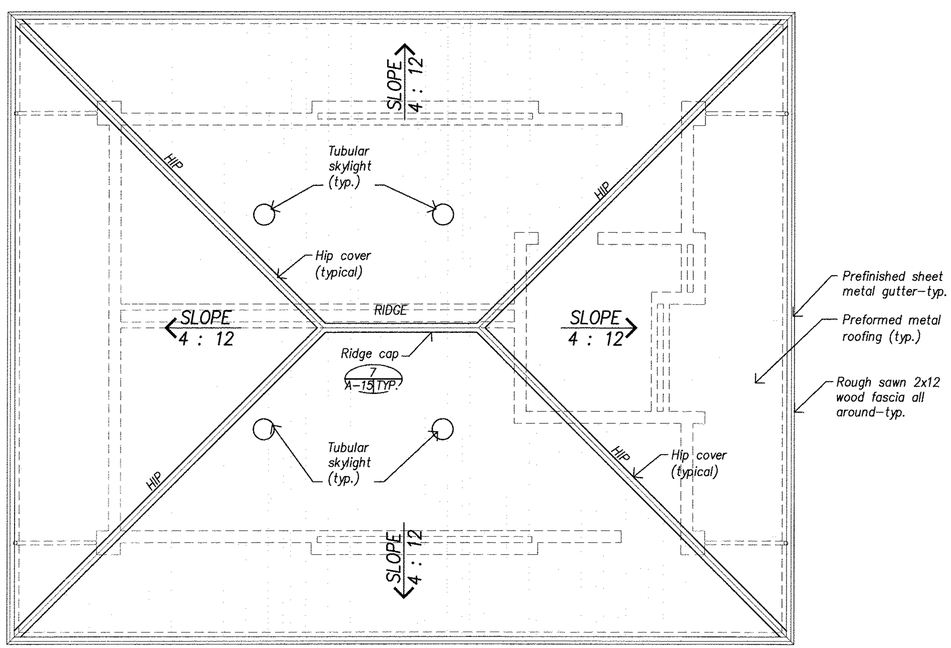

C/A-3 Roof Plan – Typical

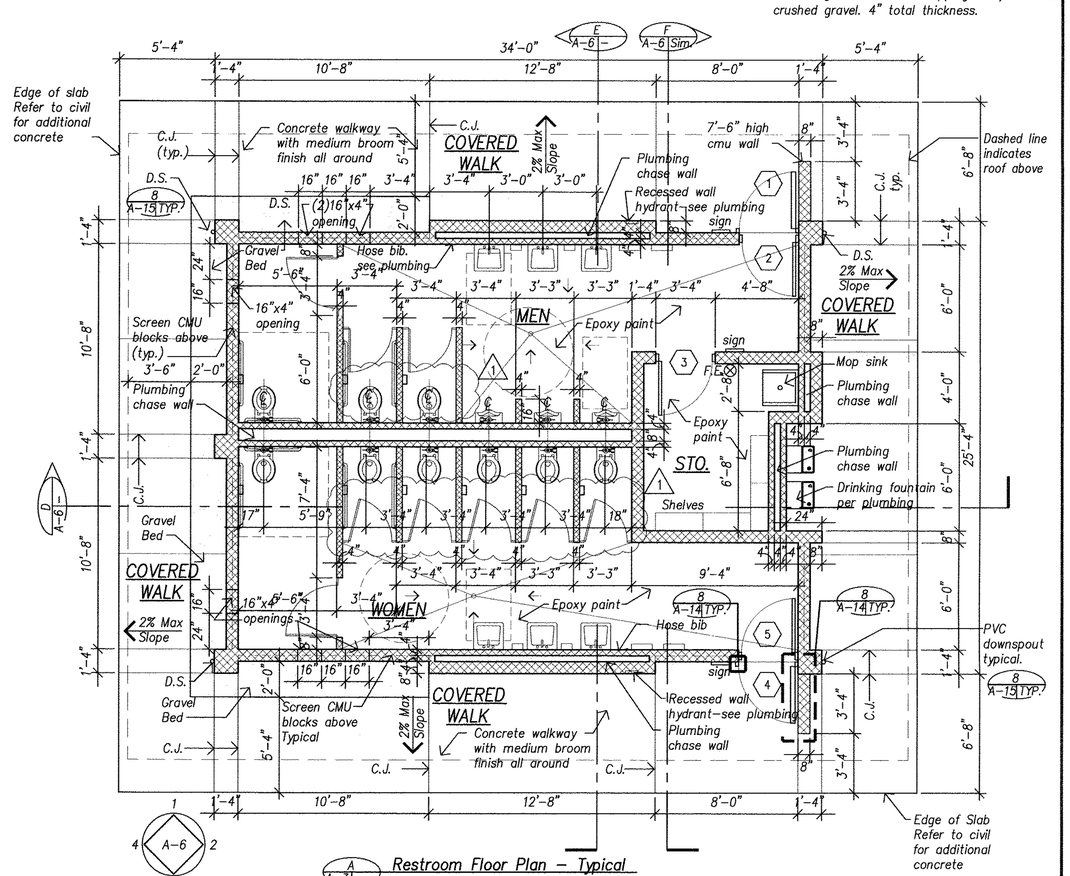

A/A-3 Restroom Floor Plan – Typical

Key To Elevations

REVISION NO.	SYM.	DESCRIPTION	SHT./OF	DATE	APPROVED
1	1	RELOCATED TPH	10/17	1/20/2016	

ALVIN M. YOSHIMORI LICENSED PROFESSIONAL ARCHITECT No. 2714 HAWAII, U.S.A.

LICENSE EXPIRATION DATE: 4-30-2016

THIS WORK WAS PREPARED BY ME OR UNDER MY SUPERVISION CONSTRUCTION OF THIS PROJECT WILL BE UNDER MY OBSERVATION.

(Observation of Construction as defined in the Hawaii Administrative Rules, Dept. of Commerce and Consumer Affairs, Professional Engineers, Architects, Surveyors and Landscape Architects)

SIGNATURE DATE

STATE OF HAWAII
DEPARTMENT OF LAND AND NATURAL RESOURCES
ENGINEERING DIVISION

CENTRAL MAUI REGIONAL SPORTS COMPLEX
PHASE 3
WAILUKU, MAUI, HAWAII

RESTROOM FLOOR, RCP, ROOF PLAN

DESIGNED: AY	SUBMITTED: AY
DRAWN: LE, RA	DATE: DECEMBER 2015
CHECKED: AY	SCALE: 1/4" = 1'-0"
APPROVED: CHIEF ENGINEER	JAN 20 2016 DATE
	DRAWING NO. A-3

JOB NO. F93C817D

Sheet Notes

1. See sheet A/A-12 for accessible heights.
2. See detail 2/A-15 for tubular skylight detail.
3. See sheet A-13 for sign locations.
4. Painting not required for exterior metal soffit panels, interior ceiling metal panels, doors and door frames.
5. See sheet A-13 for exterior paint schedule and colors.

Legend

① Screen Block
[#] Item to be painted and paint color

Concrete Masonry Unit Legend

① Screen Block
② Split Face One Face
③ Smooth Face
④ Fluted, Split Block

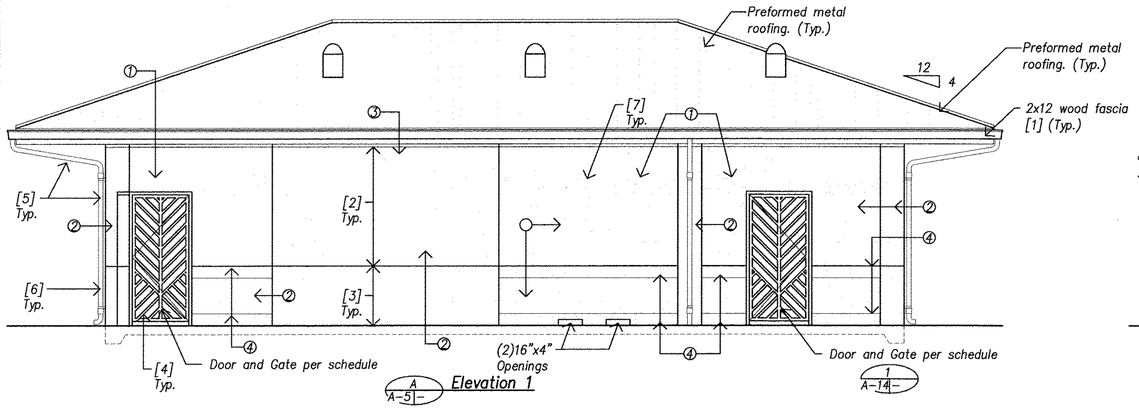

Elevation 1

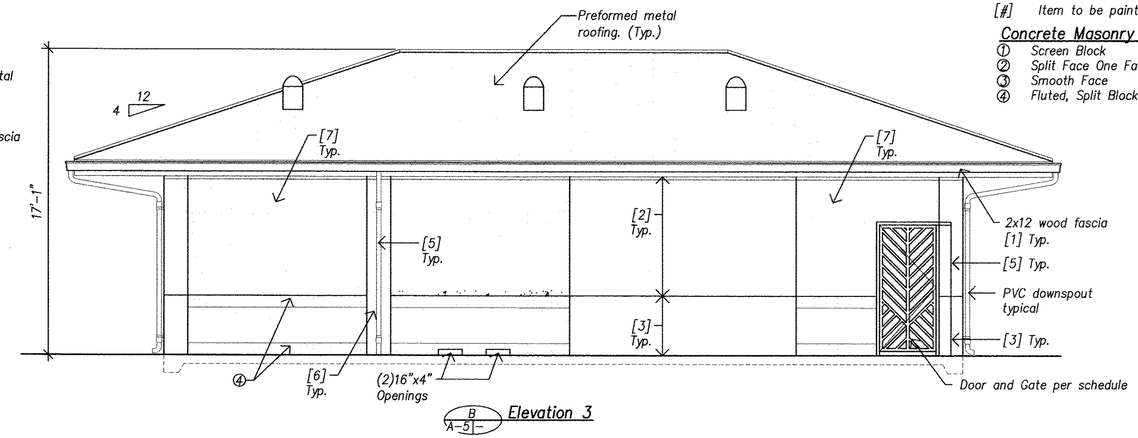

Elevation 3

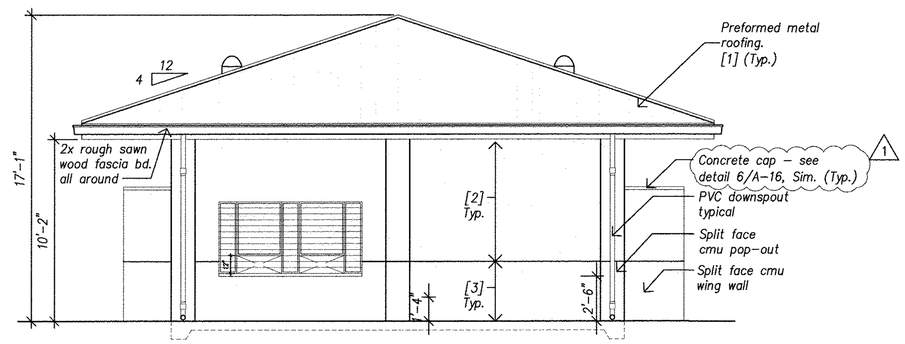

Elevation 4

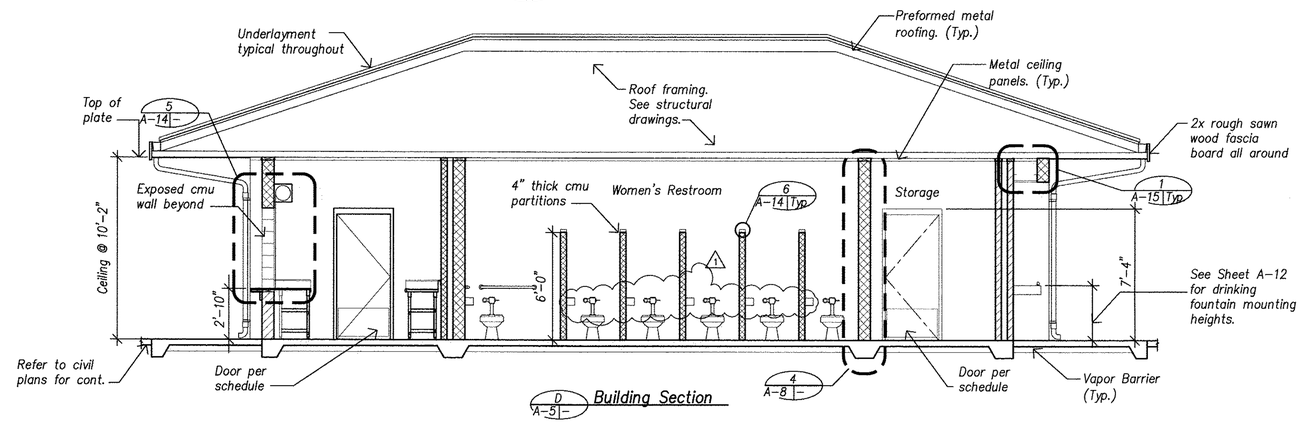

Building Section

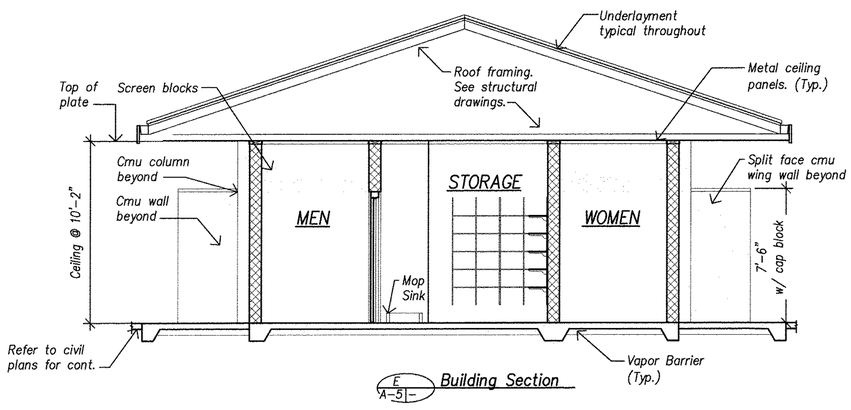

Building Section

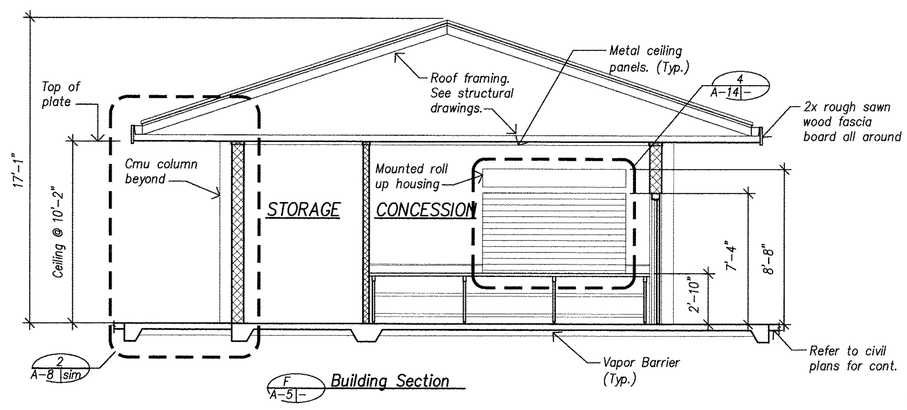

Building Section

REVISION NO.	SYM.	DESCRIPTION	SHT./OF	DATE	APPROVED
1	1	Det. C/A.5, Revised Note Det. D/A-5 Relocated TPH	11/17	1/20/2016	

ALVIN M. YOSHIMORI LICENSED PROFESSIONAL ARCHITECT No. 2714 HAWAII, U.S.A.

LICENSE EXPIRATION DATE: 4-30-2016

THIS WORK WAS PREPARED BY ME OR UNDER MY SUPERVISION. CONSTRUCTION OF THIS PROJECT WILL BE UNDER MY OBSERVATION.

(Observation of Construction as defined in the Hawaii Administrative Rules, Dept. of Commerce and Consumer Affairs, Professional Engineers, Architects, Surveyors and Landscape Architects)

SIGNATURE DATE

STATE OF HAWAII
DEPARTMENT OF LAND AND NATURAL RESOURCES
ENGINEERING DIVISION

CENTRAL MAUI REGIONAL SPORTS COMPLEX
PHASE 3
WAILUKU, MAUI, HAWAII

CONCESSION ELEVATIONS AND SECTIONS

DESIGNED: AY	SUBMITTED: AY
DRAWN: LE, RA	DATE: DECEMBER 2015
CHECKED: AY	SCALE: 1/4" = 1'-0"
APPROVED: CHIEF ENGINEER	JAN 20 2016 DATE
	DRAWING NO. A-5

JOB NO. F93C817D

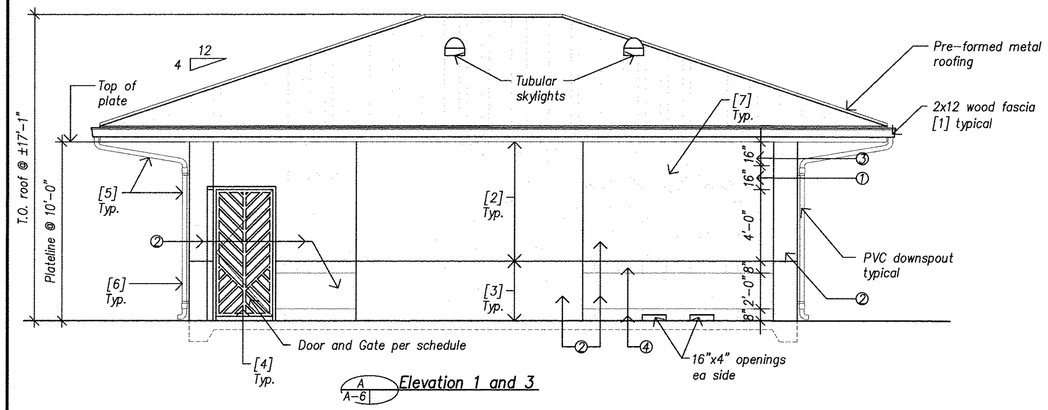

A/A-6 Elevation 1 and 3

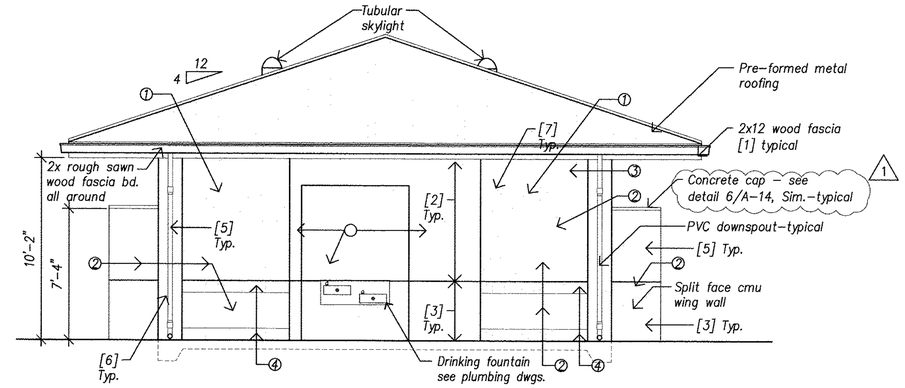

B/A-6 Elevation 2

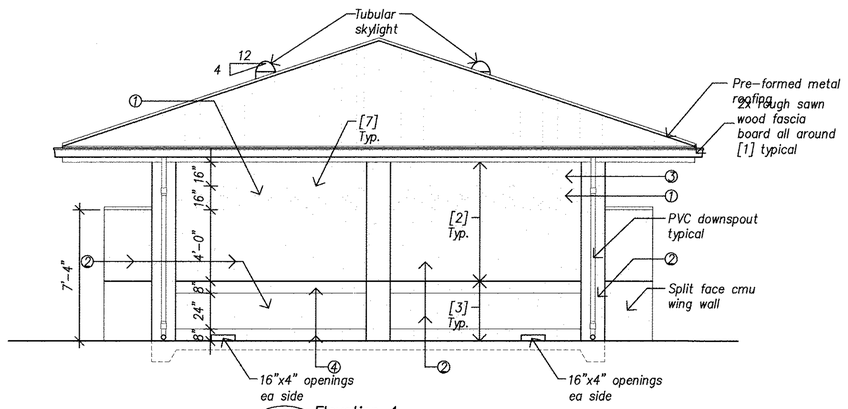

C/A-6 Elevation 4

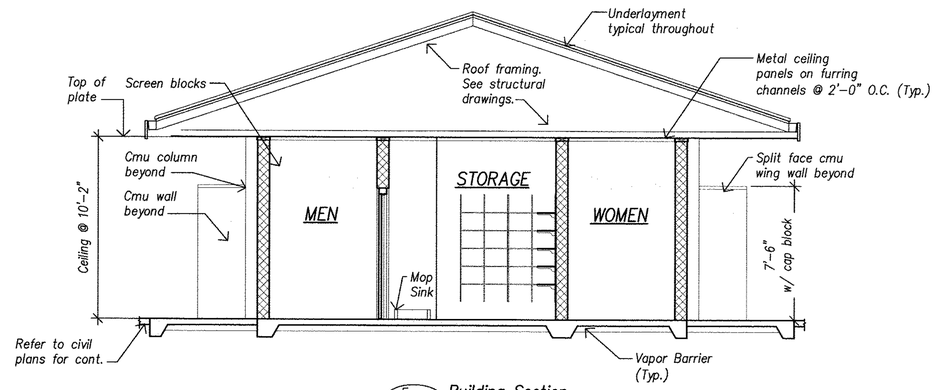

F/A-6 Building Section

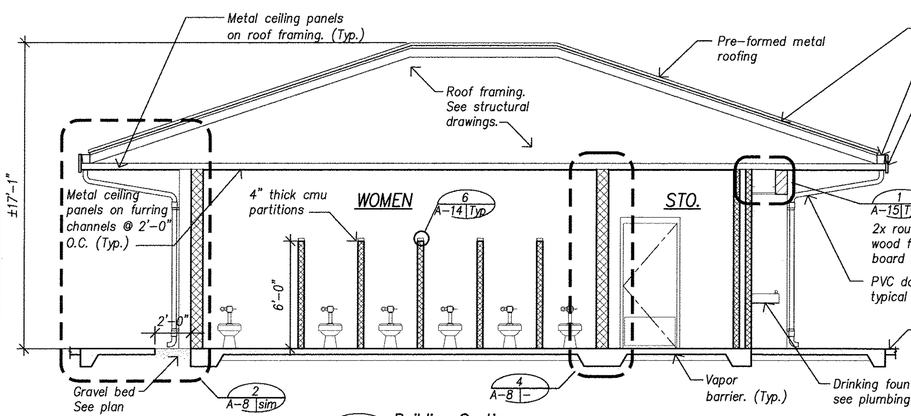

D/A-6 Building Section

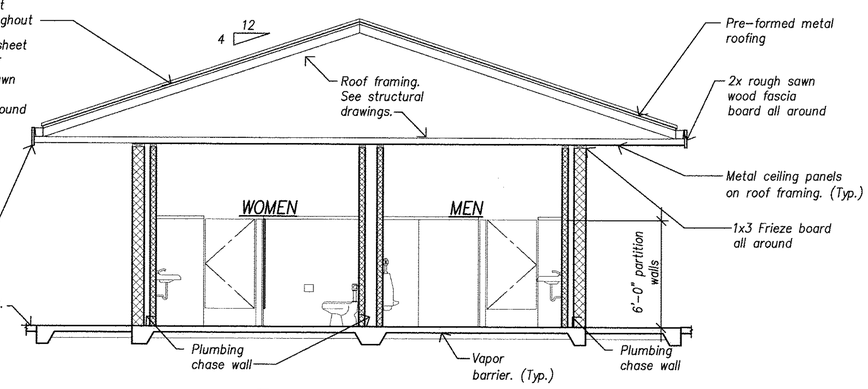

E/A-6 Building Section

Sheet Notes

1. See sheet A/A-12 for accessible heights.
2. See detail 2/A-15 for tubular skylight detail.
3. See sheet A-13 for sign locations.
4. Painting not required for exterior metal soffit panels, interior ceiling metal panels, doors and door frames.
5. See sheet A-13 for exterior paint schedule and colors.

Legend

① Screen Block
[#] Item to be painted and paint color

Concrete Masonry Unit Legend

① Screen Block
② Split Face One Face
③ Smooth Face
④ Fluted, Split Block

REVISION NO.	SYM.	DESCRIPTION	SHT./OF	DATE	APPROVED
1	1	Det. B/A-6, Revised Note	12/17	1/20/2016	

ALVIN M. YOSHIMORI LICENSED PROFESSIONAL ARCHITECT No. 2714 HAWAII, U.S.A.

LICENSE EXPIRATION DATE: 4-30-2016

THIS WORK WAS PREPARED BY ME OR UNDER MY SUPERVISION. CONSTRUCTION OF THIS PROJECT WILL BE UNDER MY OBSERVATION.

(Observation of Construction as defined in the Hawaii Administrative Rules, Dept. of Commerce and Consumer Affairs, Professional Engineers, Architects, Surveyors and Landscape Architects)

SIGNATURE DATE

STATE OF HAWAII
DEPARTMENT OF LAND AND NATURAL RESOURCES
ENGINEERING DIVISION

CENTRAL MAUI REGIONAL SPORTS COMPLEX
PHASE 3
WAILUKU, MAUI, HAWAII

RESTROOM ELEVATIONS & PAINT SCHEDULES

DESIGNED: AY	SUBMITTED: AY
DRAWN: LE, RA	DATE: DECEMBER 2015
CHECKED: AY	SCALE: 1/4" = 1'-0"
APPROVED: CHIEF ENGINEER	JAN 20 2016 DATE

DRAWING NO. A-6

JOB NO. F93C817D

SHEET NO. 56 OF 90 SHEETS

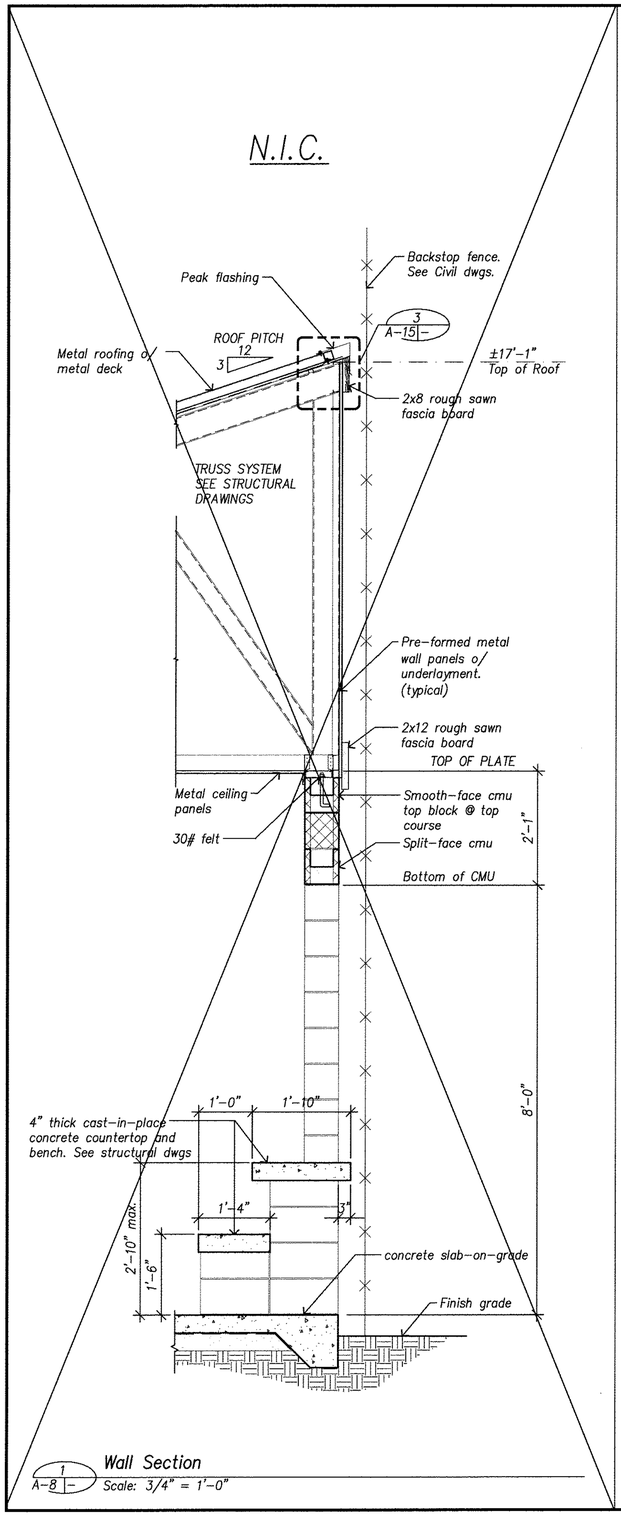

1 / A-8 Wall Section
Scale: 3/4" = 1'-0"

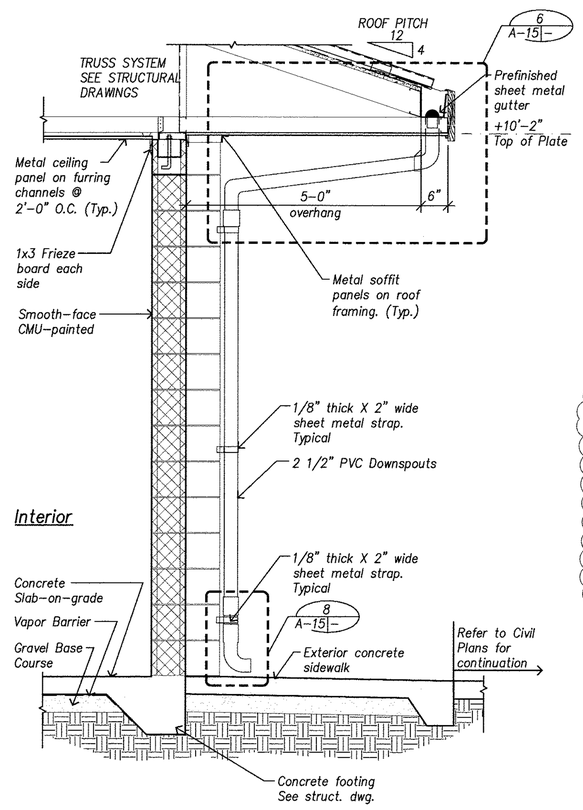

2 / A-8 Wall Section
Scale: 3/4" = 1'-0"

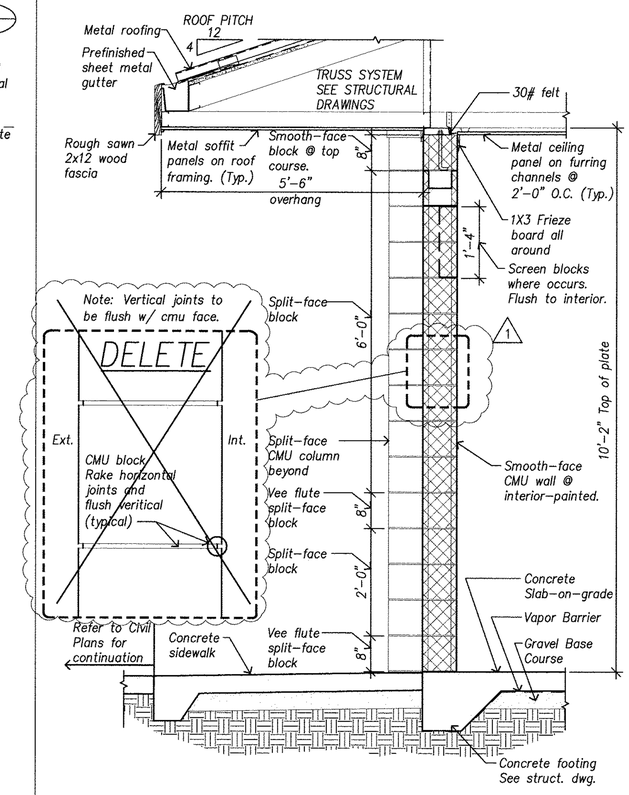

3 / A-8 Wall Section
Scale: 3/4" = 1'-0"

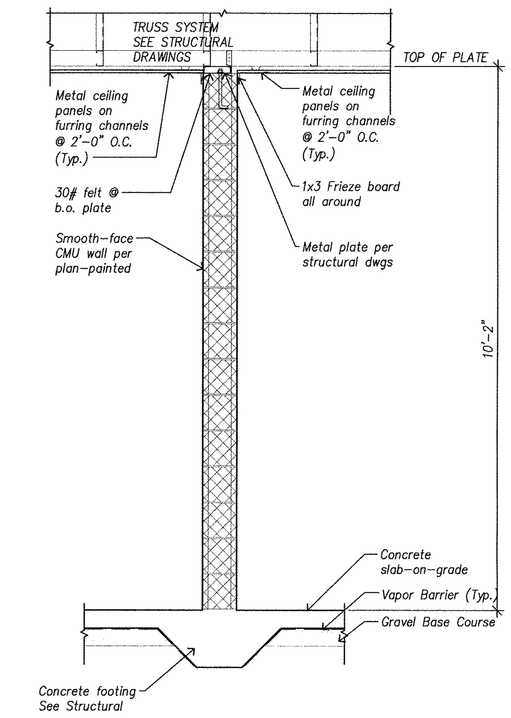

4 / A-8 Wall Section – Typical Interior
Scale: 3/4" = 1'-0"

REVISION NO.	SYM.	DESCRIPTION	SHT./OF	DATE	APPROVED
1	1	Det. 3/A-8, Delete Joint Detail	13/17	1/20/2016	

ALVIN M. YOSHIMORI LICENSED PROFESSIONAL ARCHITECT No. 2714 HAWAII, U.S.A.

LICENSE EXPIRATION DATE: 4-30-2016

THIS WORK WAS PREPARED BY ME OR UNDER MY SUPERVISION. CONSTRUCTION OF THIS PROJECT WILL BE UNDER MY OBSERVATION.

(Observation of Construction as defined in the Hawaii Administrative Rules, Dept. of Commerce and Consumer Affairs, Professional Engineers, Architects, Surveyors and Landscape Architects)

SIGNATURE DATE

STATE OF HAWAII
DEPARTMENT OF LAND AND NATURAL RESOURCES
ENGINEERING DIVISION

CENTRAL MAUI REGIONAL SPORTS COMPLEX
PHASE 3
WAILUKU, MAUI, HAWAII

WALL SECTIONS

DESIGNED: AY	SUBMITTED: AY
DRAWN: LE, RA	DATE: DECEMBER 2015
CHECKED: AY	SCALE: 3/4" = 1'-0"
APPROVED: CHIEF ENGINEER	JAN 20 2016 DATE
	DRAWING NO. A-8

JOB NO. F93C817D

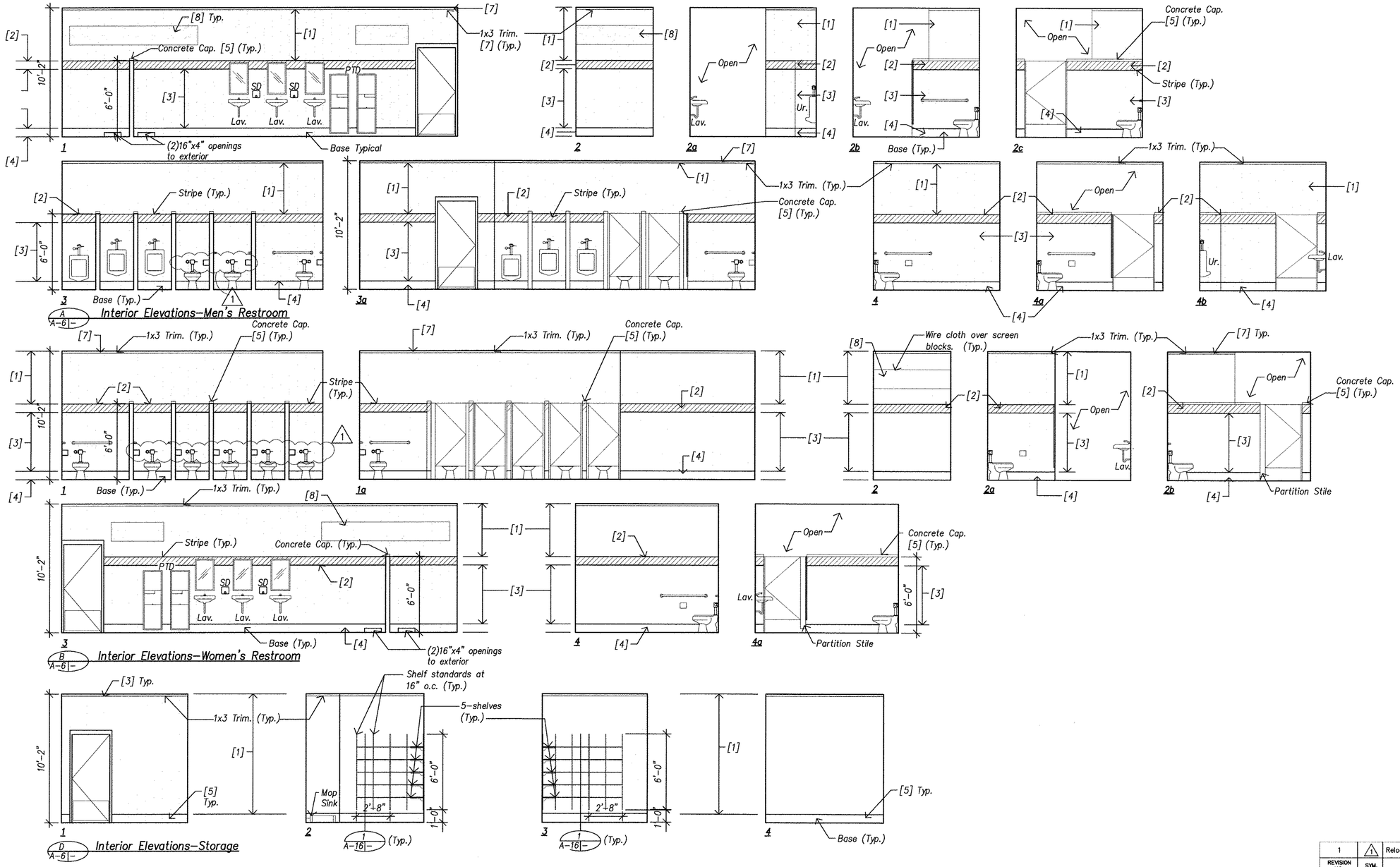

Sheet Notes

1. See A/A-12 for mounting heights and locations of accessible fixtures and accessories.
2. All interior finish to be epoxy paint over smooth finish CMU.
3. All interior cmu joints to be tooled.
4. Painting not required for exterior metal soffit panels, interior ceiling metal panels, doors and door frames.
5. See sheet A-13 for interior paint schedule and colors.

Legend

[#] Item to be painted and paint color.

REVISION NO.	SYM.	DESCRIPTION	SHT./OF	DATE	APPROVED
1	1	Relocated TPH	14/17	1/20/2016	

ALVIN M. YOSHIMORI LICENSED PROFESSIONAL ARCHITECT No. 2714 HAWAII, U.S.A.

LICENSE EXPIRATION DATE: 4-30-2016

THIS WORK WAS PREPARED BY ME OR UNDER MY SUPERVISION. CONSTRUCTION OF THIS PROJECT WILL BE UNDER MY OBSERVATION.

(Observation of Construction as defined in the Hawaii Administrative Rules, Dept. of Commerce and Consumer Affairs, Professional Engineers, Architects, Surveyors and Landscape Architects)

SIGNATURE DATE

STATE OF HAWAII
DEPARTMENT OF LAND AND NATURAL RESOURCES
ENGINEERING DIVISION

CENTRAL MAUI REGIONAL SPORTS COMPLEX
PHASE 3
WAILUKU, MAUI, HAWAII

RESTROOM INTERIOR ELEVATIONS

DESIGNED: AY	SUBMITTED: AY
DRAWN: LE, RA	DATE: DECEMBER 2015
CHECKED: AY	SCALE: 1/4" = 1'-0"
APPROVED:	
CHIEF ENGINEER	JAN 20 2016 DATE

DRAWING NO. A-10

JOB NO. F9308177D

SHEET NO. 59 OF 90 SHEETS

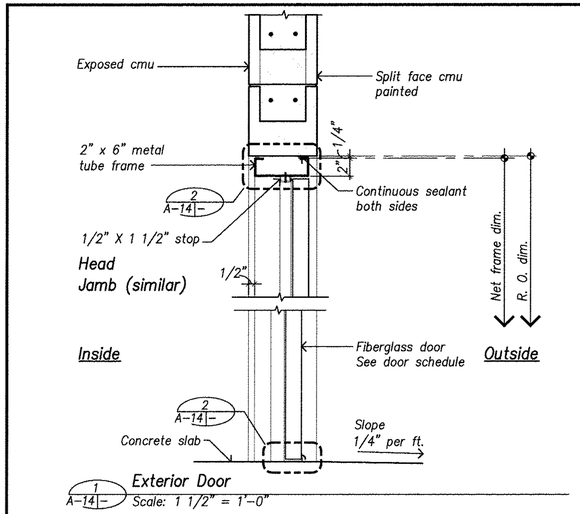

1 A-14 Exterior Door
Scale: 1 1/2" = 1'-0"

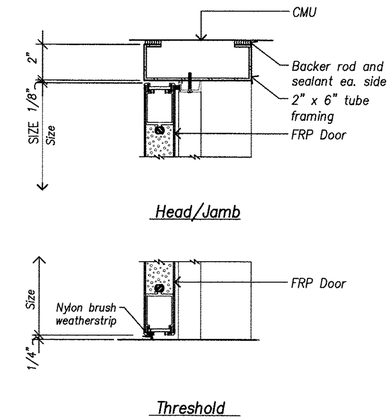

2 A-14 Gate Details
Scale: 3" = 1'-0"

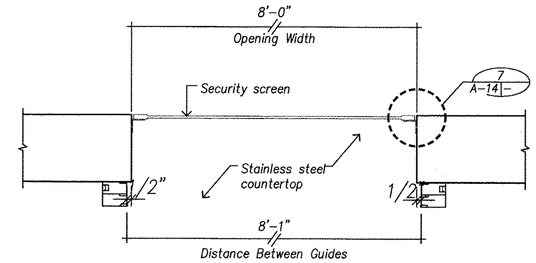

3 A-14 Plan at Opening of Roll-up Door @ Concession
Scale: 1 1/2" = 1'-0"

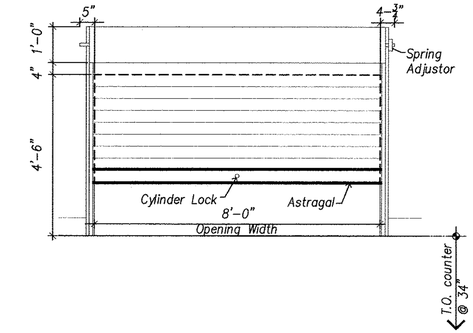

4 A-14 Elevation of Roll-up Door @ Concession (Coil Side)
Scale: 1/2" = 1'-0"

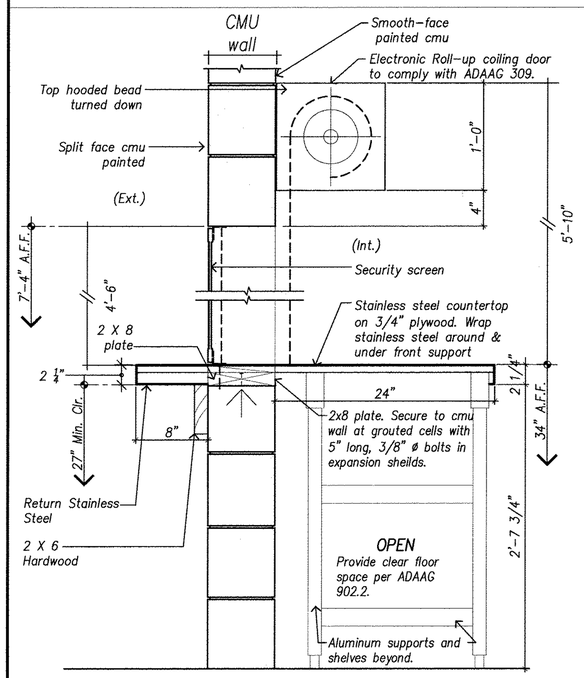

5 A-14 Section of Electronic Roll-up Door @ Concession
Scale: 1 1/2" = 1'-0"

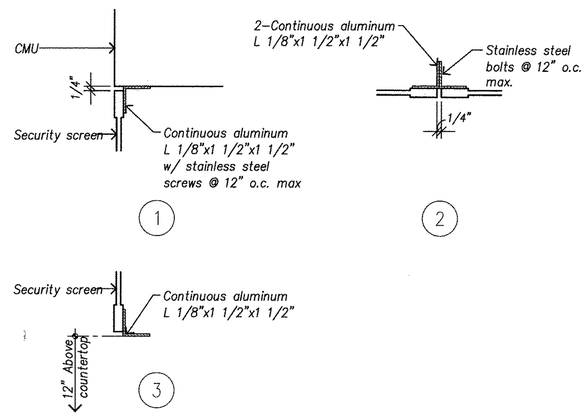

Security Screen Details
Scale: 3" = 1'-0"

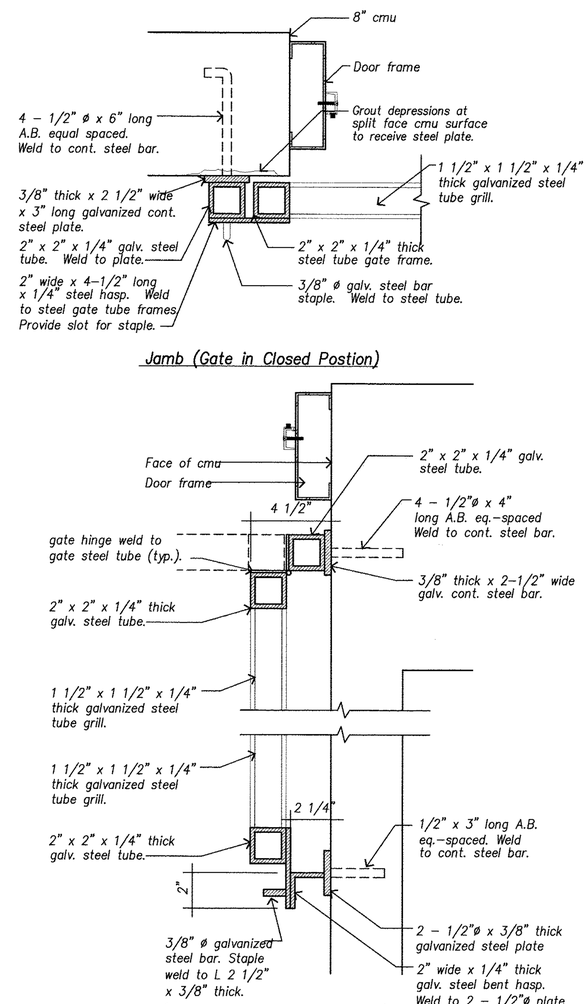

8 A-14 Gate Details
Scale: 3" = 1'-0"

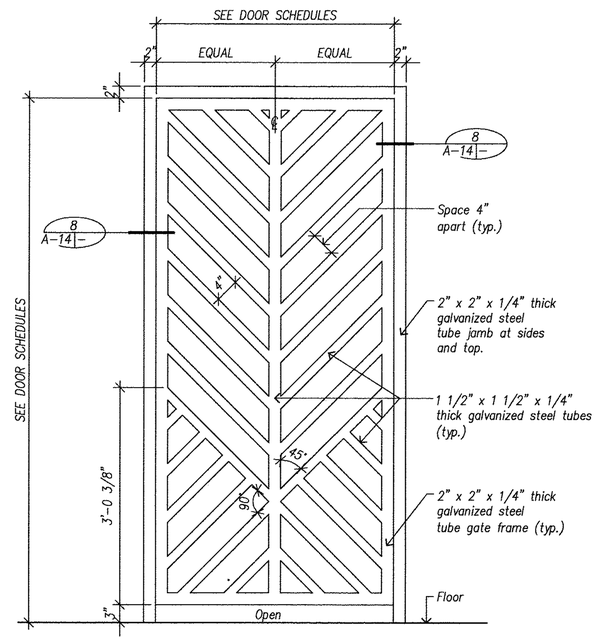

9 A-14 Exterior Gate
Scale: 1" = 1'-0"

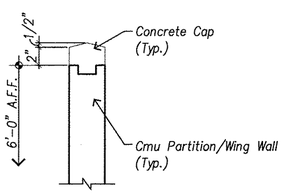

6 A-14 Concrete Cap
Scale: 1 1/2" = 1'-0"

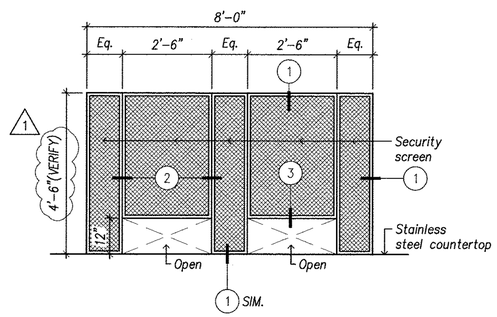

7 A-14 Elevation of Security Screen @ Concession
Scale: 1/2" = 1'-0"

REVISION NO.	SYM.	DESCRIPTION	SHT./OF	DATE	APPROVED
1	1	Det. 7/A-14, Revised Dimension	15/17	1/20/2016	

ALVIN M. YOSHIMORI
LICENSED PROFESSIONAL ARCHITECT
No. 2714
HAWAII, U.S.A.

LICENSE EXPIRATION DATE: 4-30-2016

THIS WORK WAS PREPARED BY ME OR UNDER MY SUPERVISION. CONSTRUCTION OF THIS PROJECT WILL BE UNDER MY OBSERVATION.

(Observation of Construction as defined in the Hawaii Administrative Rules, Dept. of Commerce and Consumer Affairs, Professional Engineers, Architects, Surveyors and Landscape Architects)

SIGNATURE DATE

STATE OF HAWAII
DEPARTMENT OF LAND AND NATURAL RESOURCES
ENGINEERING DIVISION

CENTRAL MAUI REGIONAL SPORTS COMPLEX
PHASE 3
WAILUKU, MAUI, HAWAII

DOOR DETAILS

DESIGNED: AY	SUBMITTED: AY
DRAWN: LE, RA	DATE: DECEMBER 2015
CHECKED: AY	SCALE: AS NOTED
APPROVED: CHIEF ENGINEER	JAN 20 2016 DATE
	DRAWING NO. A-14

JOB NO. F93081 7D

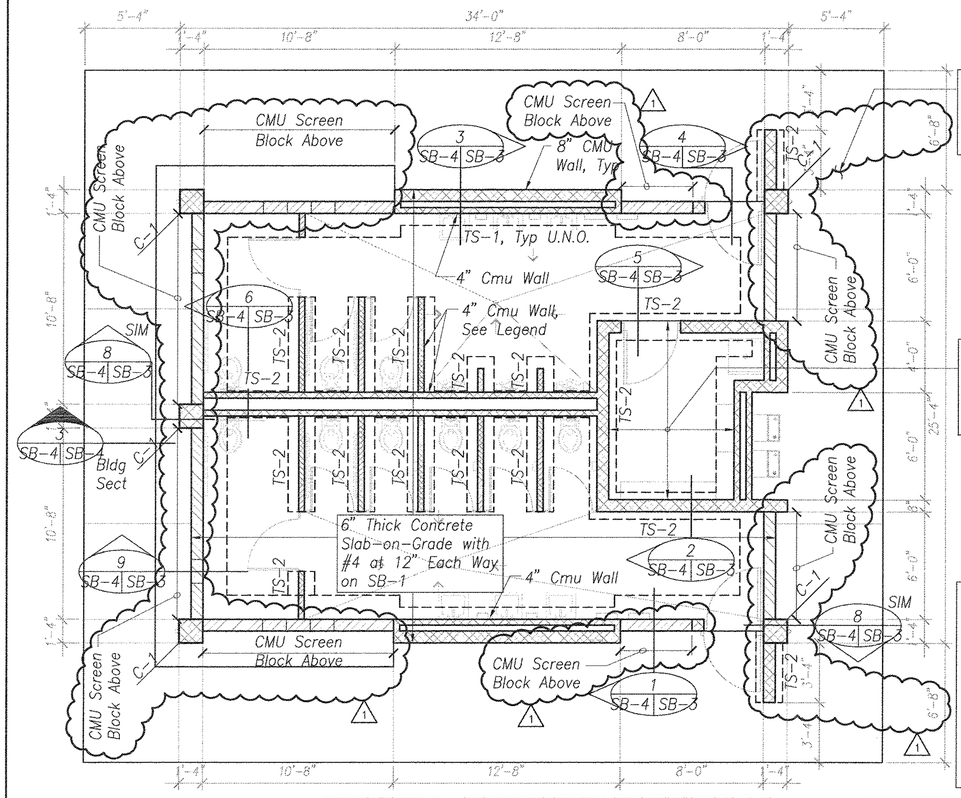

Restroom Foundation Plan

1 SB-4 | SB-4

Scale: 1/4" = 1'-0"

Reference Drawings:
General Notes, see SB-1
Typical Slab-on-Grade Details, see 3/SB-2
Typical Foundation Details, see SB-2
Typical CMU Wall Details, see SB-6

Foundation Notes:
1. Reference elevation 0.00 = finish floor elevation 00.00'.
2. For dimensions not shown, see Architectural Drawings.
3. For waterproofing requirements and details, see Architectural Drawings.

Slab on Grade Notes:
1. Thickness of Slab-on-Grade shown are minimum and shall be maintained at all sloped and depressed areas.
2. For floor elevations, slopes to drain and slab joint locations, see Architectural drawings.

legend

SB-1	Indicates Subgrade Type, see 3/SB-2
TS-1	Indicates Thickened Slab Type, see SB-3
C-1	Indicates Column Type, see SB-3
	Indicates Change in Elevation
	Indicates Full Height CMU Wall
	Indicates Partial Height CMU Wall

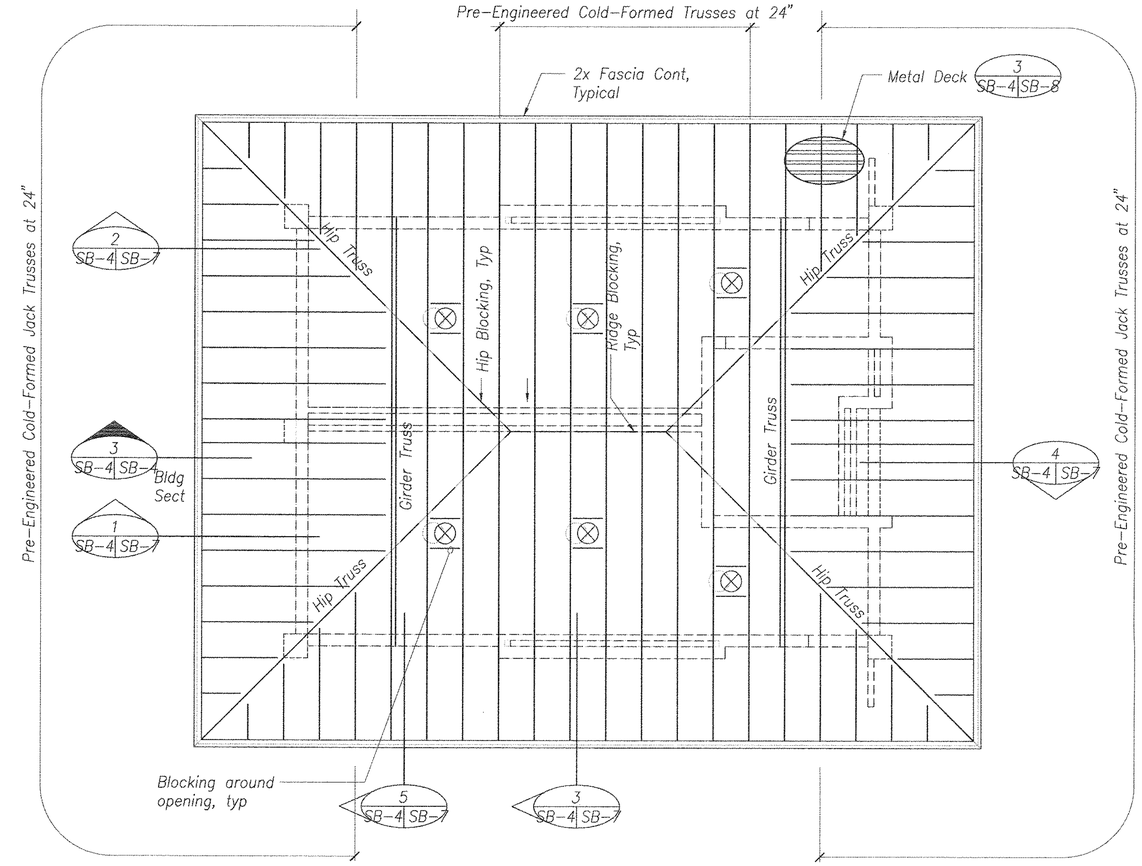

Restroom Roof Framing Plan

2 SB-4 | SB-4

Scale: 1/4" = 1'-0"

Reference Drawings:
General Notes, see SB-1
Truss Elevations, see SB-10

Notes:
1. See Architectural Drawings for Location of Mechanical Openings.

Legend
Indicates CMU Wall Below

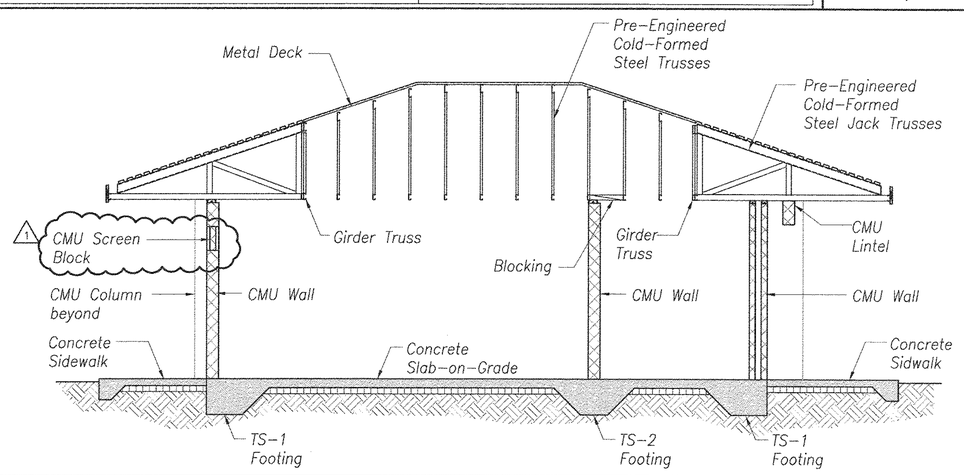

Restroom Building Section

3 SB-4 | SB-4

Scale: 1/4" = 1'-0"

REVISION NO.	SYM.	DESCRIPTION	SHT./OF	DATE	APPROVED
1	1	Addendum 1	16/17	1/20/16	

JONATHAN D MURAI LICENSED PROFESSIONAL ENGINEER No. 10979-S HAWAII, U.S.A.

EXPIRATION DATE OF THE LICENSE 4/30/2016
THIS WORK WAS PREPARED BY ME OR UNDER MY SUPERVISION

R. M. TOWILL CORPORATION

STATE OF HAWAII
DEPARTMENT OF LAND AND NATURAL RESOURCES
ENGINEERING DIVISION

CENTRAL MAUI REGIONAL SPORTS COMPLEX
PHASE 3
WAILUKU, MAUI, HAWAII

RESTROOM FOUNDATION AND ROOF FRAMING PLANS, BUILDING SECTION

DESIGNED: JM		SUBMITTED:	
DRAWN: CADD		DATE: DECEMBER 2015	
CHECKED: JM		SCALE: AS SHOWN	
APPROVED: CHIEF ENGINEER	JAN 20 2016 DATE		DRAWING NO. SB-4

JOB NO. F93C817D

SHEET NO. 68 OF 90 SHEETS

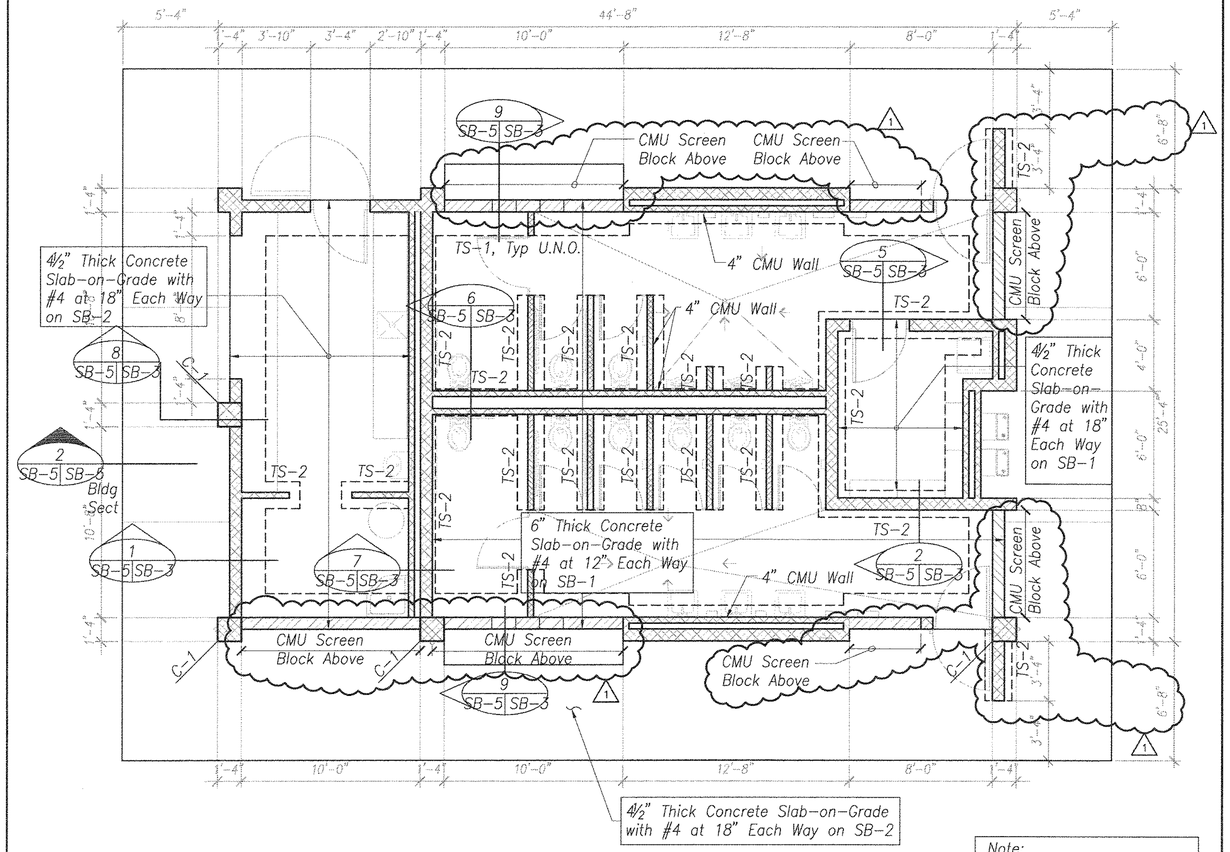

Note:
For Slab-on-Grade Notes, Foundation Notes, Drawing References and Legend, see SB-4.

Concession Foundation Plan

Scale: 1/4" = 1'-0"

1 SB-5 SB-3

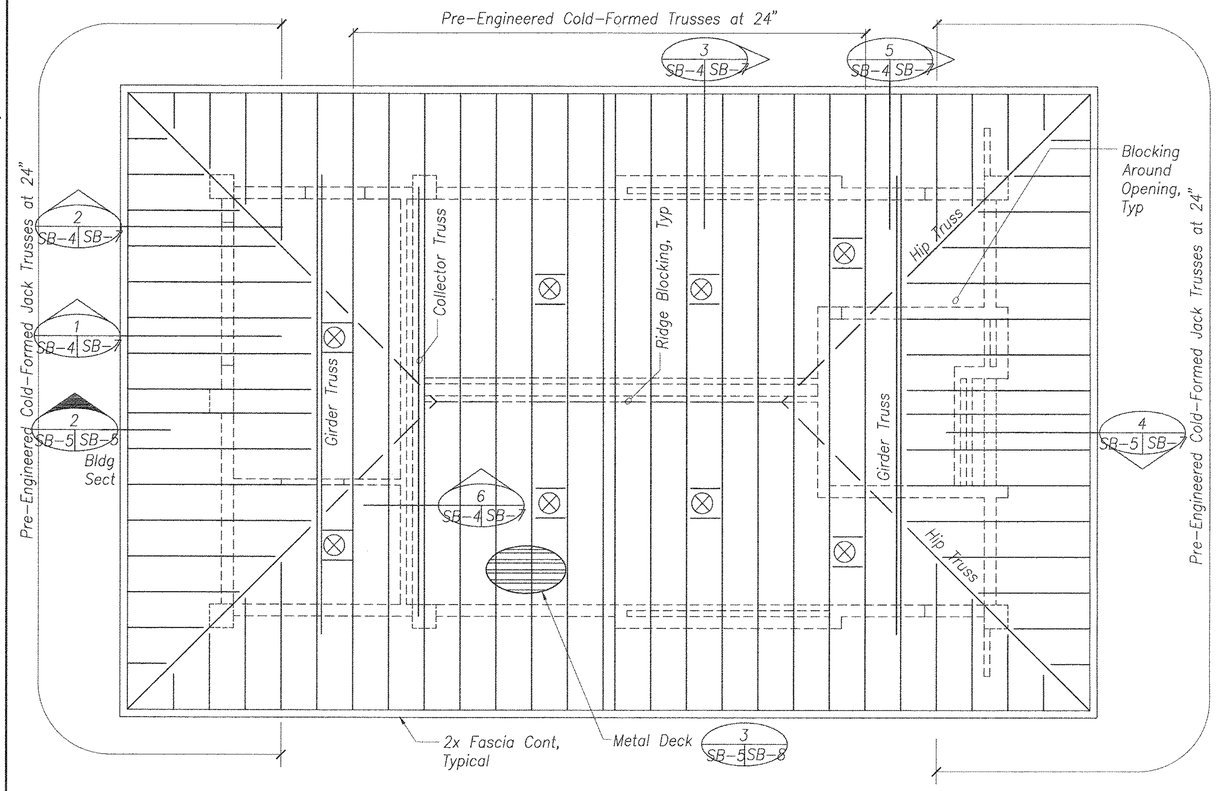

Concession Roof Framing Plan

Scale: 1/4" = 1'-0"

3 SB-5 SB-3

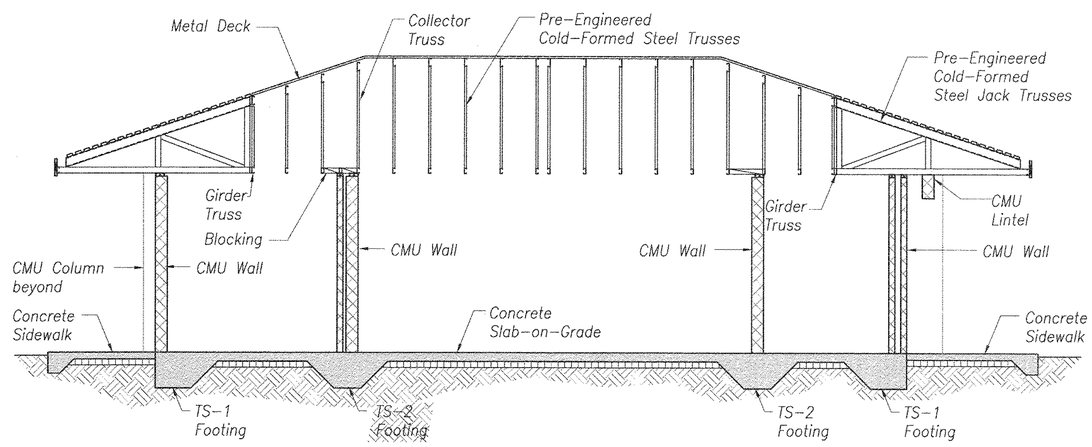

Concession Building Section

Scale: 1/4" = 1'-0"

2 SB-5 SB-3

REVISION NO.	SYM.	DESCRIPTION	SHT./OF	DATE	APPROVED
1	1	Addendum 1	17/17	1/20/16	

JONATHAN D MURAI LICENSED PROFESSIONAL ENGINEER No. 10979-S HAWAII, U.S.A.

EXPIRATION DATE OF THE LICENSE 4/30/2016
THIS WORK WAS PREPARED BY ME OR UNDER MY SUPERVISION

R. M. TOWILL CORPORATION
Survey • Cartography • Environmental Services • Photogrammetry • Mapping • Construction Management
808 842 1133 2024 North King Street Suite 200 Honolulu Hawaii 96819-3404

STATE OF HAWAII
DEPARTMENT OF LAND AND NATURAL RESOURCES
ENGINEERING DIVISION

CENTRAL MAUI REGIONAL SPORTS COMPLEX
PHASE 3
WAILUKU, MAUI, HAWAII

CONCESSION FOUNDATION AND ROOF FRAMING PLANS AND BUILDING SECTION

DESIGNED:	JM	SUBMITTED:	--
DRAWN:	CADD	DATE:	DECEMBER 2015
CHECKED:	JM	SCALE:	AS SHOWN
APPROVED:	JAN 20 2016	DRAWING NO.	SB-5
CHIEF ENGINEER	DATE		

JOB NO. F93C817D

SHEET NO. 69 OF 90 SHEETS