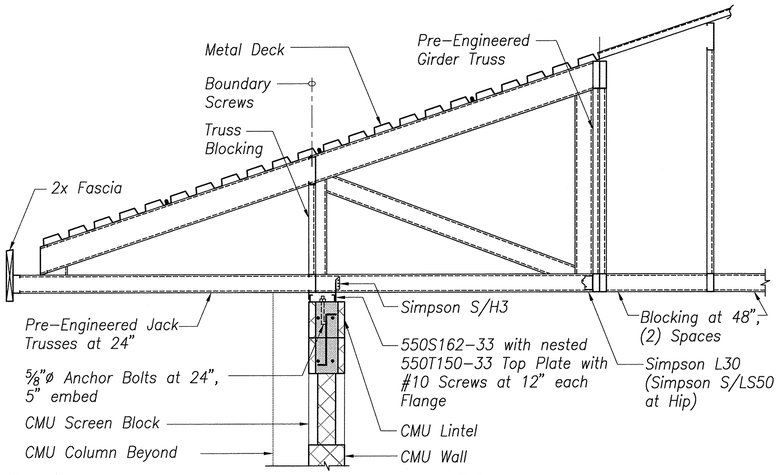

Section 1

Scale: 3/4" = 1'-0"

SB-4, SB-5, SB-7, SB-8 | SB-7

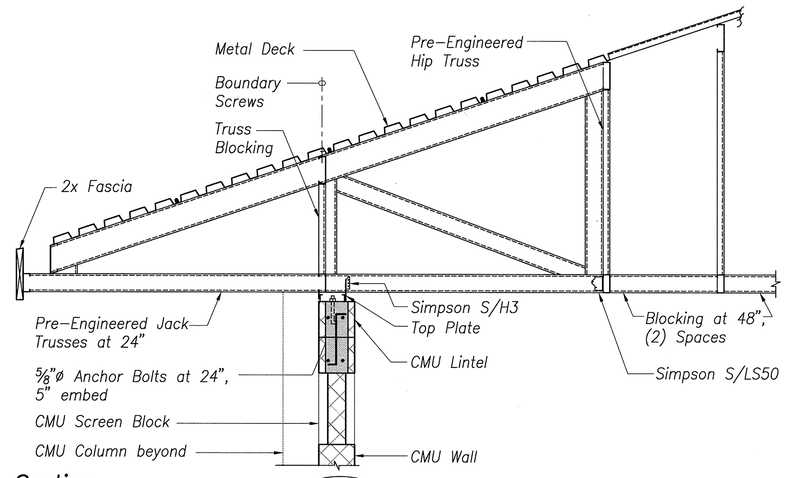

Section 2

Scale: 3/4" = 1'-0"

SB-4, SB-5 | SB-7

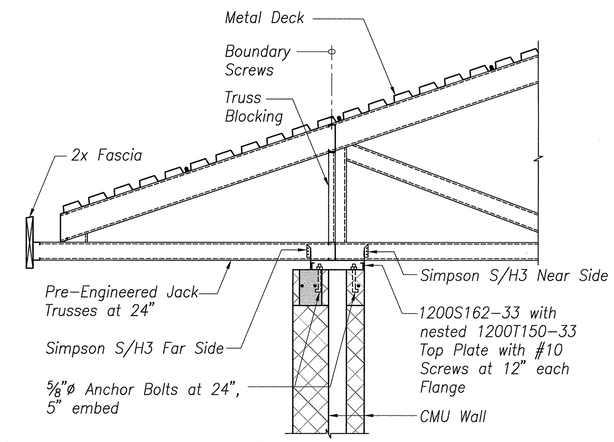

Section 3

Scale: 3/4" = 1'-0"

SB-4, SB-5 | SB-7

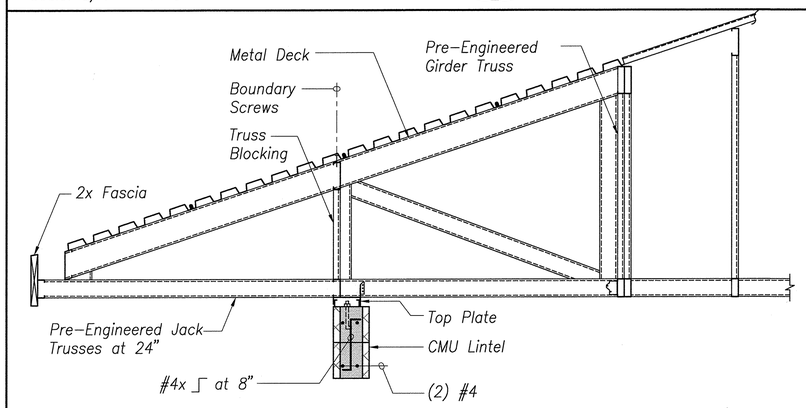

Section 4

Scale: 3/4" = 1'-0"

SB-4, SB-5 | SB-7

Note:
For Balance of Notes, See 1 | SB-7 | SB-7

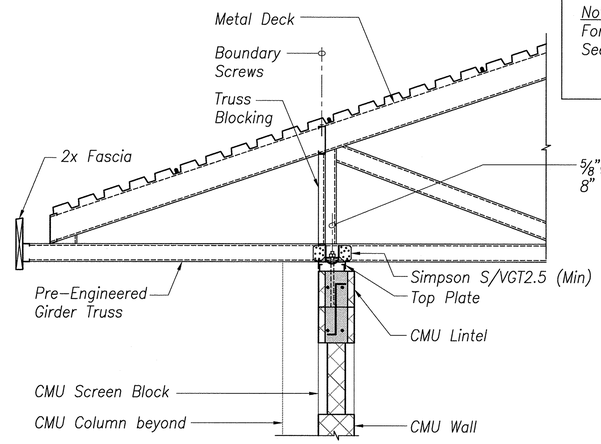

Section 5

Scale: 3/4" = 1'-0"

SB-4, SB-5 | SB-7

Note:
For Balance of Notes, See 1 | SB-7 | SB-7

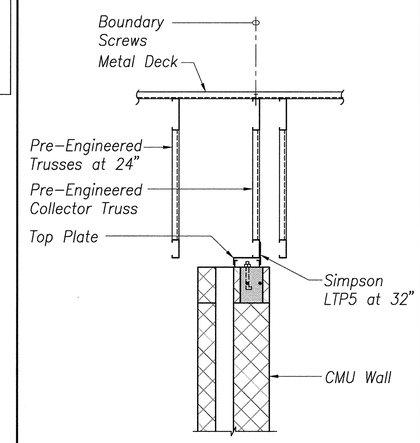

Section 6

Scale: 3/4" = 1'-0"

SB-5 | SB-7

REVISION NO.	SYM.	DESCRIPTION	SHT./OF	DATE	APPROVED

JONATHAN D. NUSAI
LICENSED PROFESSIONAL ENGINEER
No. 10979-S
HAWAII, U.S.A.

EXPIRATION DATE OF THE LICENSE 4/30/2016
THIS WORK WAS PREPARED BY ME OR UNDER MY SUPERVISION

R. M. TOWILL CORPORATION
Survey • Engineering • Environmental Studies • Photogrammetry • Mapping • Construction Management
808 842 1133 2024 North King Street, Suite 200 Honolulu, Hawaii 96819-3466

STATE OF HAWAII
DEPARTMENT OF LAND AND NATURAL RESOURCES
ENGINEERING DIVISION

CENTRAL MAUI REGIONAL SPORTS COMPLEX
PHASE 3
WAILUKU, MAUI, HAWAII

ROOF FRAMING SECTIONS

DESIGNED: JM	SUBMITTED: --
DRAWN: CADD	DATE: DECEMBER 2015
CHECKED: JM	SCALE: AS SHOWN
APPROVED: CHIEF ENGINEER — DEC 22 2015 DATE	DRAWING NO. **SB-7**

JOB NO. F93C817D

SHEET NO. 71 OF 90 SHEETS

P:\Drafting\2015-12-21_3145 Central Maui Regional Park Phase 3\3145_PH3_S07.dwg, 12/21/2015 1:00:31 PM, tamanaha

Cold–Formed Steel Roof Trusses Notes:

A. Trusses and components shall be engineered in accordance with AISI "North American Specification for the Design of Cold–Formed Steel Structural Members", Latest Edition and AISI S214: "North American Standard for Cold–Formed Steel Framing – Truss Design", Latest Edition.
B. Truss fabrication shall be performed by an experienced cold–formed steel truss fabricator with not less than three years satisfactory experience designing and fabricating cold–formed steel truss systems equal in material, design, and extent to the systems required for this project.
C. Truss installation shall be performed by an experienced (three year minimum) installer approved by the steel truss system fabricator.
D. Truss members 54, 68 or 97 mils thick shall meet the requirements of ASTM A1003 Grade ST50H. Truss members 33 or 43 mils thick shall meet the requirements of ASTM A1003 Grade ST33H. Provide galvanized protective coating in accordance with ASTM A924, minimum G60 coating.
E. Self–drilling, self–tapping screws shall conform to SAE J 78 and have a Type II coating in accordance with ASTM B633. Screws shall be installed with a minimum edge distance and center–to–center spacing of 1/2 inch. Screws shall extend through steel member, flushing members together, with a minimum of three exposed threads.
F. Prefabricated framing hardware shall be Simpson Strong–Tie galvanized or approved equal. Install in accordance with manufacturer's recommendations.
G. Truss members shall not be cut, notched, drilled, spliced or otherwise altered in any way without the approval of the structural engineer.
H. Truss calculations and shop drawings shall be, stamped and signed by a Structural Engineer licensed to practice in the State of Hawaii and submitted for approval prior to fabrication. Shop drawings shall include at a minimum:
   1. Layout of trusses, configuration, camber, member sizes, and connection details
   2. Specifications
   3. Temporary and permanent bracing details and requirements
   4. Truss to truss connection details, splice details and bearing details
I. See Architectural Drawings for slopes of top and bottom chords.
J. Design shall be based on the following criteria:
   1. Roof dead load (not including self weight of trusses) =11 psf
   2. Roof live load top chord = 20 psf (reducible)
   3. Bottom chord live load = 10 psf
   4. Wind loads in accordance with building code criteria noted on drawings
   5. Load combinations in accordance with Building Code.
   6. Top chord and bottom chord live load need not act concurrently.
   7. Vertical deflection under total load shall be limited to 1/240 of span or 1 1/4", whichever is less.
   8. Vertical deflection under live or wind load shall be limited to 1/360 of span or 3/4", whichever is less.
   9. Collector truss = 450 plf. (Unfactored) Loads along collector trusses are reversible. Loads along top chord shall be transferred to bottom chord through truss member connections.
K. Truss member minimum sizes are as follows (Steel Stud Manufacturers Association designation):
   1. Top chord = 600S162
   2. Bottom chord = 400S162
   3. Web members = 400S162
L. Special or proprietary cold formed roof truss systems which modify or alter typical details, support connections and architectural interface shall have modified details engineered and approved.

Truss Elevations and Notes

1 / SB–4 | SB–8

Not to Scale

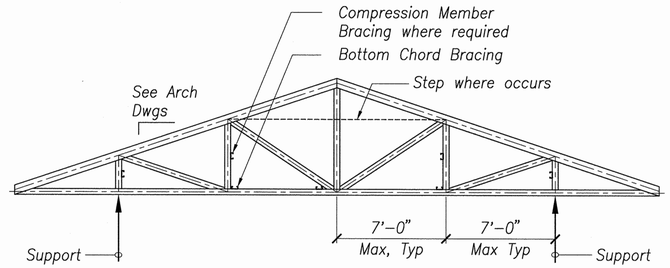

Typical Truss at Restroom and Concession

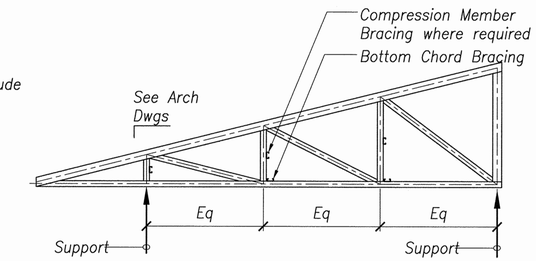

Typical Truss at Scorers Booth

Truss Blocking

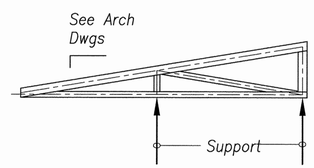

Hip Truss

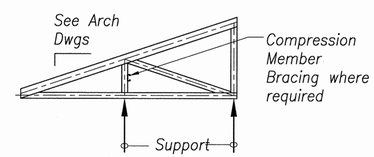

Jack Truss

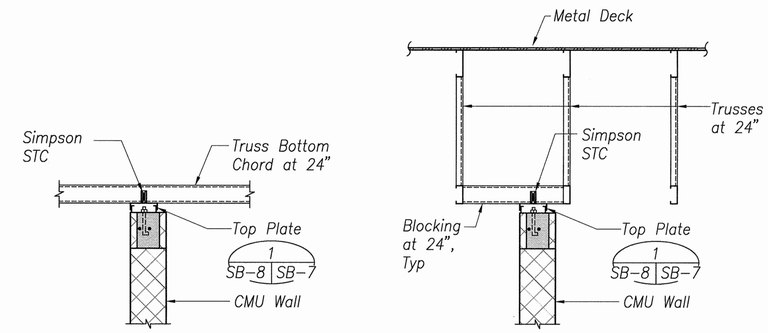

Wall Perpendicular to Trusses

Wall Parallel to Trusses

Non–Bearing Wall Bracing Detail

2 / SB–4 | SB–8

Not to Scale

Metal Deck Schedule									
Location	Type	Minimum Section Properties			Concrete Topping	Deck Fastening			Remarks
		I (in^4)	+S (in^3)	–S (in^3)		At Support per 36" sheet width	Side Seam Connector	At Support or member parallel to Deck	
Roof	1½"x22 Gage	0.175	0.187	0.198	No	(4) #12 Screws	#12 Screws At 12"	#12 Screws At 12"	

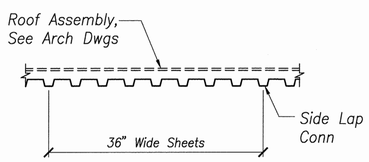

Section

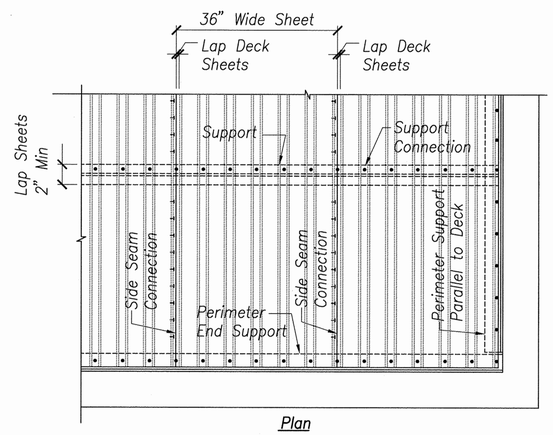

Plan

Metal Deck Schedule and Details

3 / SB–4, SB–5 | SB–8

Not To Scale

REVISION NO.	SYM.	DESCRIPTION	SHT./OF	DATE	APPROVED

STATE OF HAWAII
DEPARTMENT OF LAND AND NATURAL RESOURCES
ENGINEERING DIVISION

CENTRAL MAUI REGIONAL SPORTS COMPLEX
PHASE 3
WAILUKU, MAUI, HAWAII

ROOF FRAMING SECTIONS AND TRUSS ELEVATIONS

JONATHAN D. MURAI LICENSED PROFESSIONAL ENGINEER No. 10979–S HAWAII, U.S.A.

EXPIRATION DATE OF THE LICENSE 4/30/2016
THIS WORK WAS PREPARED BY ME OR UNDER MY SUPERVISION

R. M. TOWILL CORPORATION
Planning • Engineering • Environmental Services • Photogrammetry • Surveying • Construction Management
808 842 1133 2024 North King Street Suite 200 Honolulu Hawaii 96819–3484

DESIGNED: JM	SUBMITTED: --
DRAWN: CADD	DATE: DECEMBER 2015
CHECKED: JM	SCALE: AS SHOWN
APPROVED: CHIEF ENGINEER	DEC 2 2 2015 DATE
	DRAWING NO. SB-8

JOB NO. F93C817D

SHEET NO. 72 OF 90 SHEETS

P:\Drafting\2015-12-21_3145 Central Maui Regional Park Phase 3\3145_PH3_S08.dwg, 12/21/2015 1:00:33 PM, tamamaha

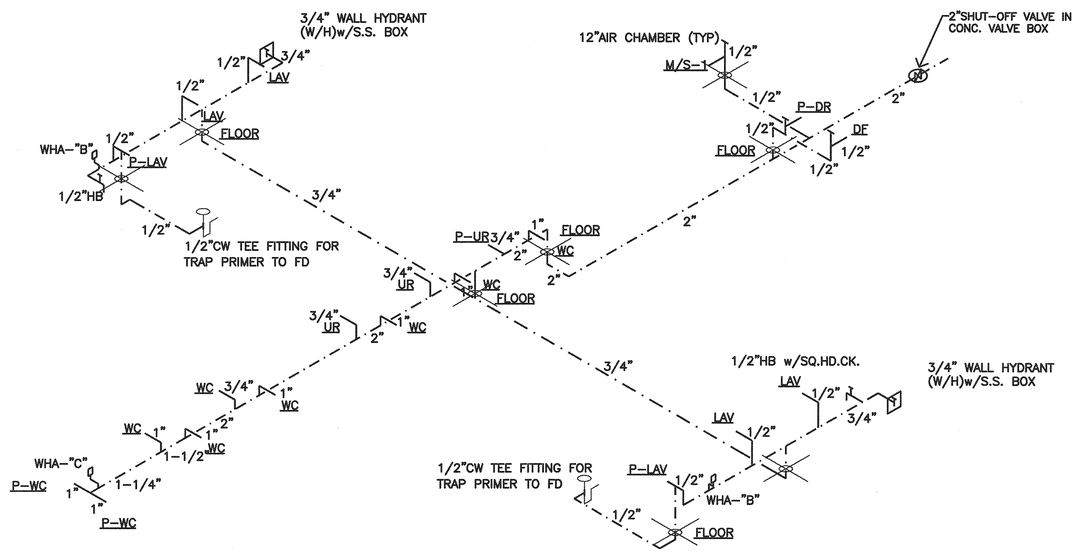

COLD WATER PIPING DIAGRAM

NOT TO SCALE

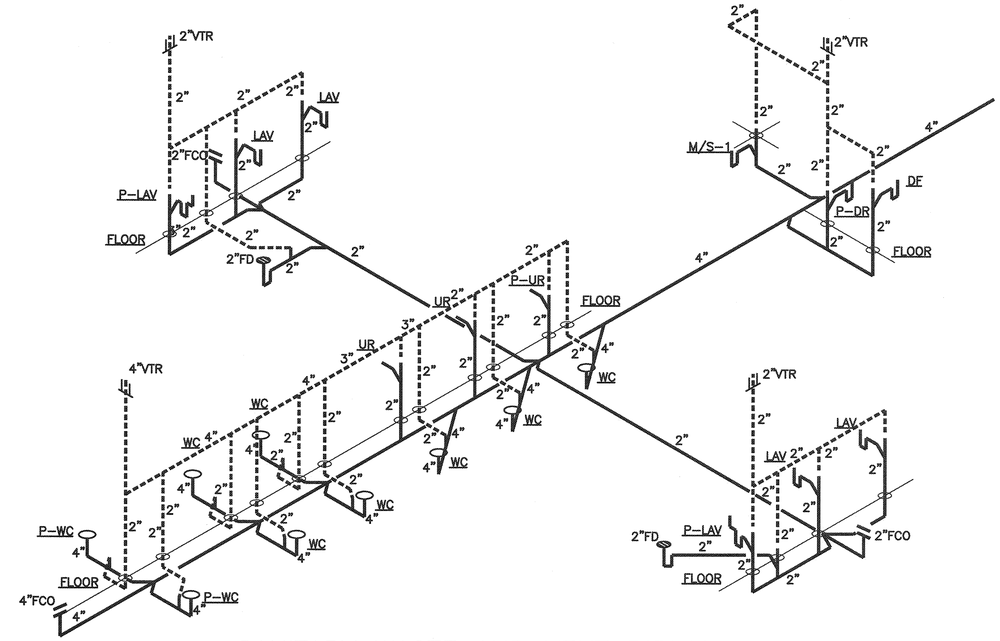

SANITARY WASTE AND VENT PIPING DIAGRAM

NOT TO SCALE

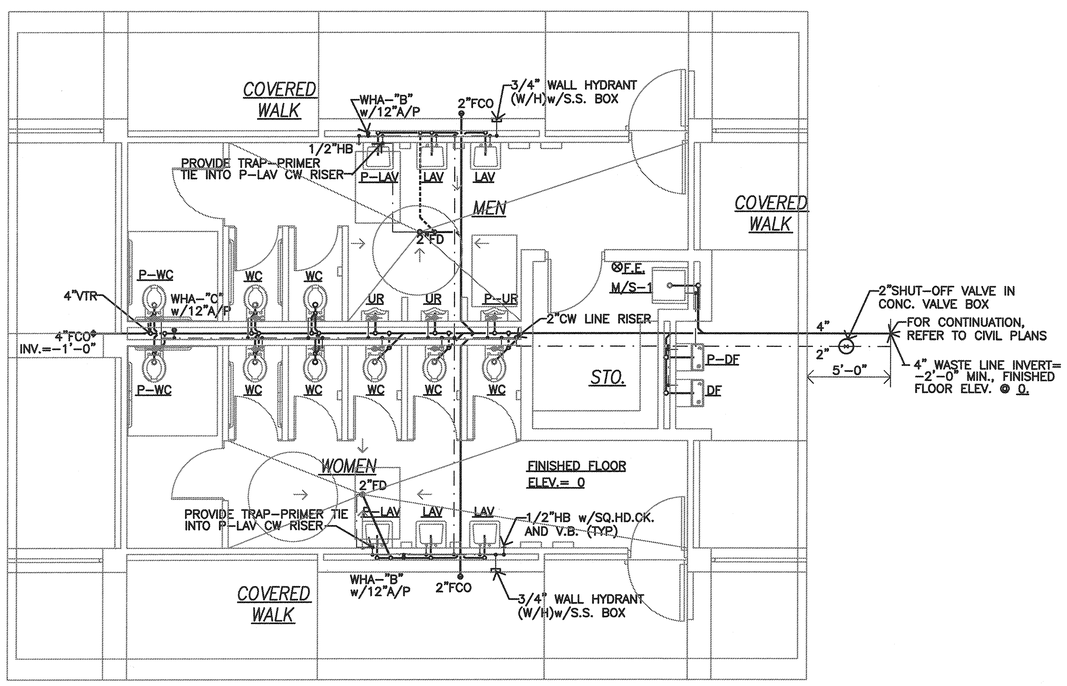

TYPICAL RESTROOM FLOOR PLAN – PLUMBING

SCALE: 1/4"=1'-0"

GENERAL CONDITIONS:

1. CONFORM TO ALL REQUIREMENTS OF THE BUILDING, PLUMBING, AND ELECTRICAL CODES OF THE MAUI COUNTY, STATE OF HAWAII HEALTH REGULATIONS, FIRE DEPARTMENT REGULATIONS AND OTHER APPLICABLE REGULATIONS. ALL ITEMS SHALL BE INSTALLED IN ACCORDANCE WITH MANUFACTURERS RECOMMENDATIONS.
2. INSTALLATION SHALL BE GUARANTEED TO BE FREE FROM DEFECTS FOR ONE YEAR FROM FINAL DATE OF ACCEPTANCE OF THE PROJECT AS A WHOLE.
3. CONTRACTOR SHALL VERIFY ALL FIELD CONDITIONS PRIOR TO BID AND CONSTRUCTION.
4. COORDINATE ALL WORK WITH OTHER TRADES TO AVOID INTERFERENCES AND DELAYS.
5. THE CONTRACTOR SHALL BE RESPONSIBLE FOR ALL PERMITS AND APPLICATIONS INCLUDING PAYMENT.
6. PROVIDE ADDITIONAL MATERIALS AND LABOR FOR A COMPLETE OPERABLE SYSTEM AT NO ADDITIONAL COST TO THE OWNER.
7. PROVIDE ACCESS PANELS FOR ALL ITEMS UNDER THIS SECTION REQUIRING SERVICING, INSPECTION, MAINTENANCE AND ADJUSTMENT.
8. PREPARE SIX (6) SETS OF SHOP DRAWINGS, EQUIPMENT CATALOG CUTS, SUBMITTED TO THE ENGINEER FOR APPROVAL PRIOR TO THE START OF WORK. NO REPRODUCTIONS OF ANY KIND TO THE CONTRACT DOCUMENTS PRIOR TO THE START OF WORK. NO REPRODUCTIONS OF ANY KIND OF THE CONTRACT DOCUMENTS SHALL BE ACCEPTABLE AS SHOP DRAWINGS. PROVIDE ONE SET OF REPRODUCIBLE AS-BUILT DRAWINGS SHOWING THE ACTUAL INSTALLED CONDITIONS AND SUBMIT TO THE OWNER UPON COMPLETION OF WORK.
9. CONTRACTOR TO VERIFY ALL EXISTING CONDITIONS FOR INSTALLATION OF EQUIPMENTS PRIOR TO ANY WORK DONE. ANY OBSTRUCTIONS FOR EQUIPMENT INSTALLATION SHALL BE POINTED OUT PRIOR TO BIDDING OF PROJECT.
10. CAULK ALL WALL PENETRATIONS TO THE OUTSIDE WATERTIGHT, NON-SHRINK TYPE.
11. USE NON-LEAD, NON-CORROSIVE SOLDER/FLUX.
12. CONTRACTOR TO CONFORM TO ALL EQUIPMENT MANUFACTURER'S RECOMMENDATIONS.
13. PROVIDE DIELECTRIC UNION OR SEPARATION BETWEEN DISSIMILAR METALS.
14. CONTRACTOR SHALL VERIFY ALL EXISTING LINE SIZES, INVERTS AND CONNECTION POINT PRIOR TO BID AND CONSTRUCTION.

MECHANICAL LEGEND

————	WASTE LINE
- - - - - -	VENT LINE
—·—·—·—	COLD WATER LINE
—··—··—	HOT WATER LINE
(POC)	POINT OF CONNECTION
SK.	SINK
W/DISP.	WITH DISPOSER
WC	WATER CLOSET
LAV	LAVATORY
UR	URINAL
P–	ACCESSIBLE FIXTURE
M/S	MOP SINK
VTR	VENT THRU ROOF
WHA	WATER HAMMER ARRESTER
(E) EXIST'G.	EXISTING
CONC.	CONCRETE
TYP.	TYPICAL
FE	FIRE EXTINGUISHER
FCO	FLOOR CLEANOUT
w/	WITH
SQ. A/P	SQUARE ACCESS/PANEL
SQ.HD.CK.	SQUARE HEAD COCK
V.B.	VACUUM BREAKER
DF	DRINKING FOUNTAIN
S.S.	STAINLESS STEEL
HB	HOSE BIBB
EWH	ELECTRIC WATER HEATER
HD.SK.	HAND SINK
3–COMPT. SK.	3–COMPARTMENT SINK

REVISION NO.	SYM.	DESCRIPTION	SHT./OF	DATE	APPROVED

RANDOLPH H. MURAYAMA
LICENSED PROFESSIONAL ENGINEER
No. 3404-M
HAWAII, U.S.A.

THIS WORK WAS PREPARED BY ME OR UNDER MY SUPERVISION AND CONSTRUCTION OF THIS PROJECT WILL BE UNDER MY OBSERVATION.

SIGNATURE — 4/30/16 EXP. DATE

R. M. TOWILL CORPORATION
Mapping • Engineering • Subsurface Utilities • Photogrammetry • Surveying • Geographic Mapping
2005 AUL 1520 2024 North King Street Suite 200 Honolulu Hawaii 96819-4001

STATE OF HAWAII
DEPARTMENT OF LAND AND NATURAL RESOURCES
ENGINEERING DIVISION

CENTRAL MAUI REGIONAL SPORTS COMPLEX
PHASE 3
WAILUKU, MAUI, HAWAII

PLUMBING PLANS, DIAGRAMS, NOTES, LEGEND

DESIGNED: ESN — SUBMITTED: ---
DRAWN: ESN — DATE: DECEMBER 2015
CHECKED: RHM — SCALE: AS SHOWN

APPROVED: CHIEF ENGINEER — DEC 22 2015 DATE

DRAWING NO. P–1

JOB NO. F93C817D

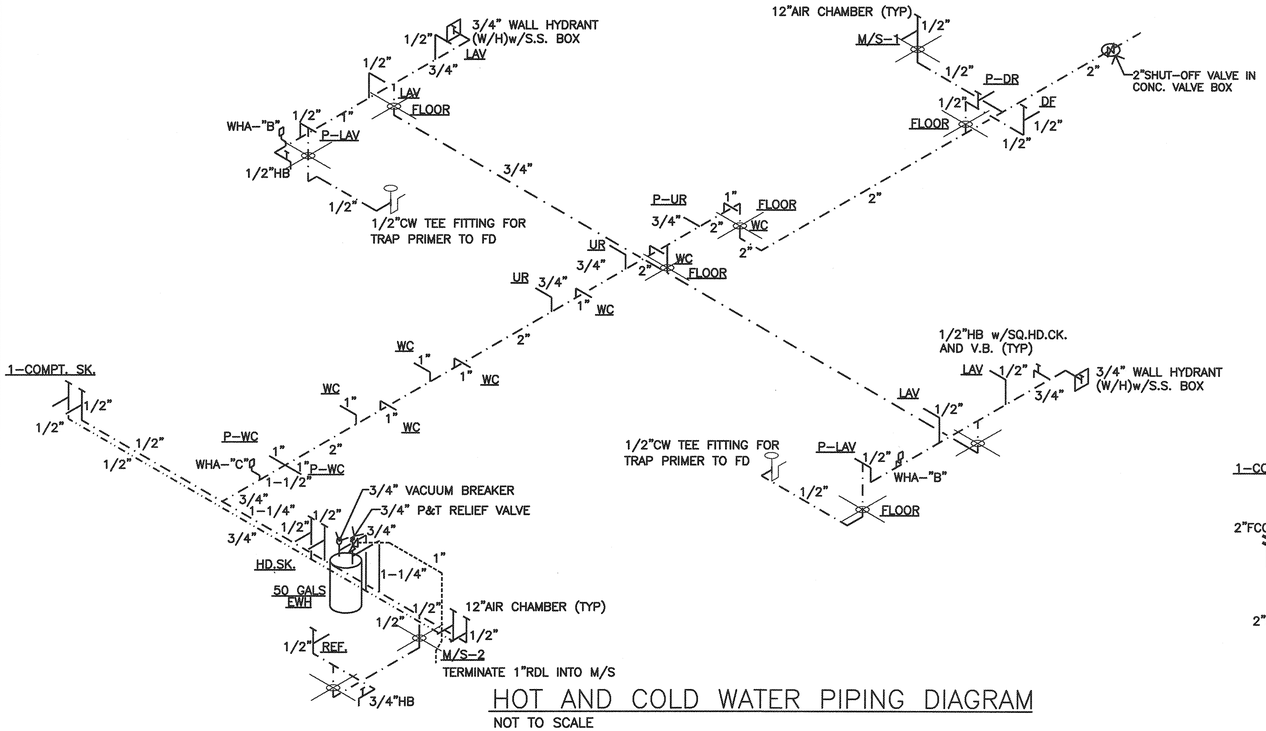

HOT AND COLD WATER PIPING DIAGRAM

NOT TO SCALE

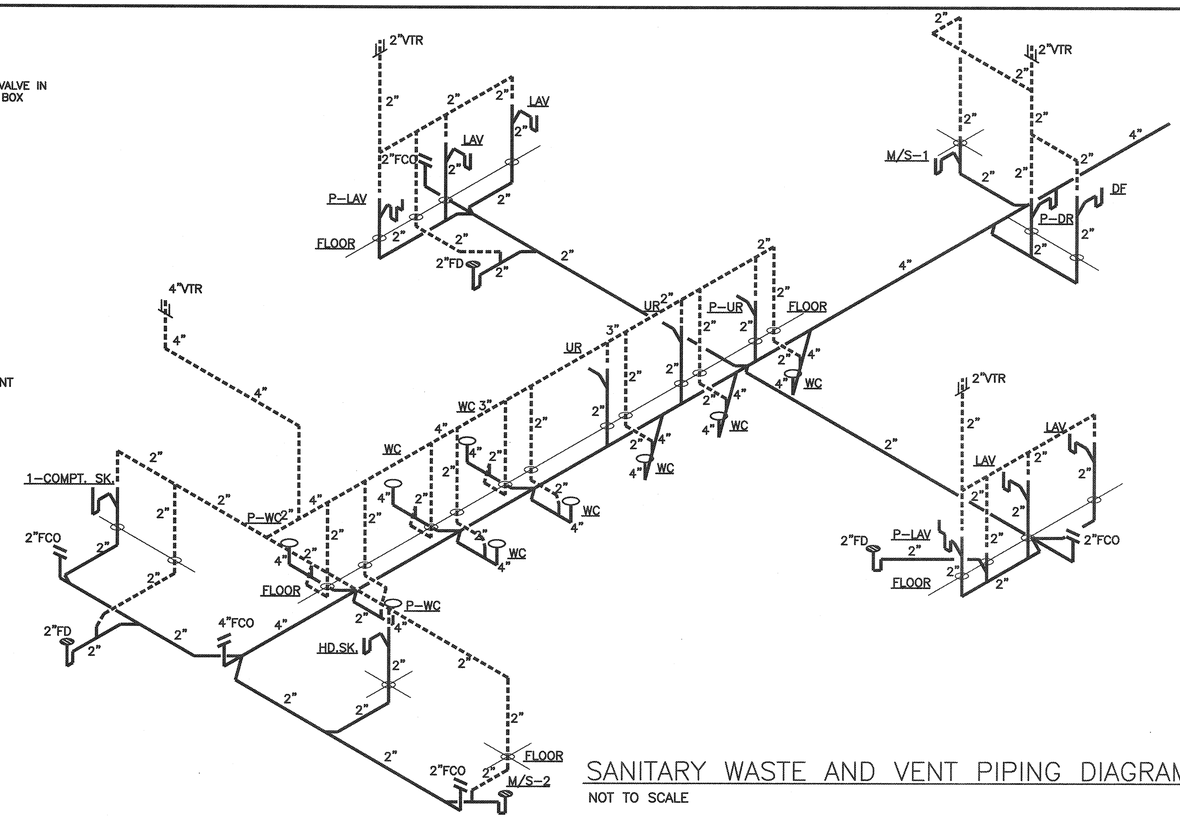

SANITARY WASTE AND VENT PIPING DIAGRAM

NOT TO SCALE

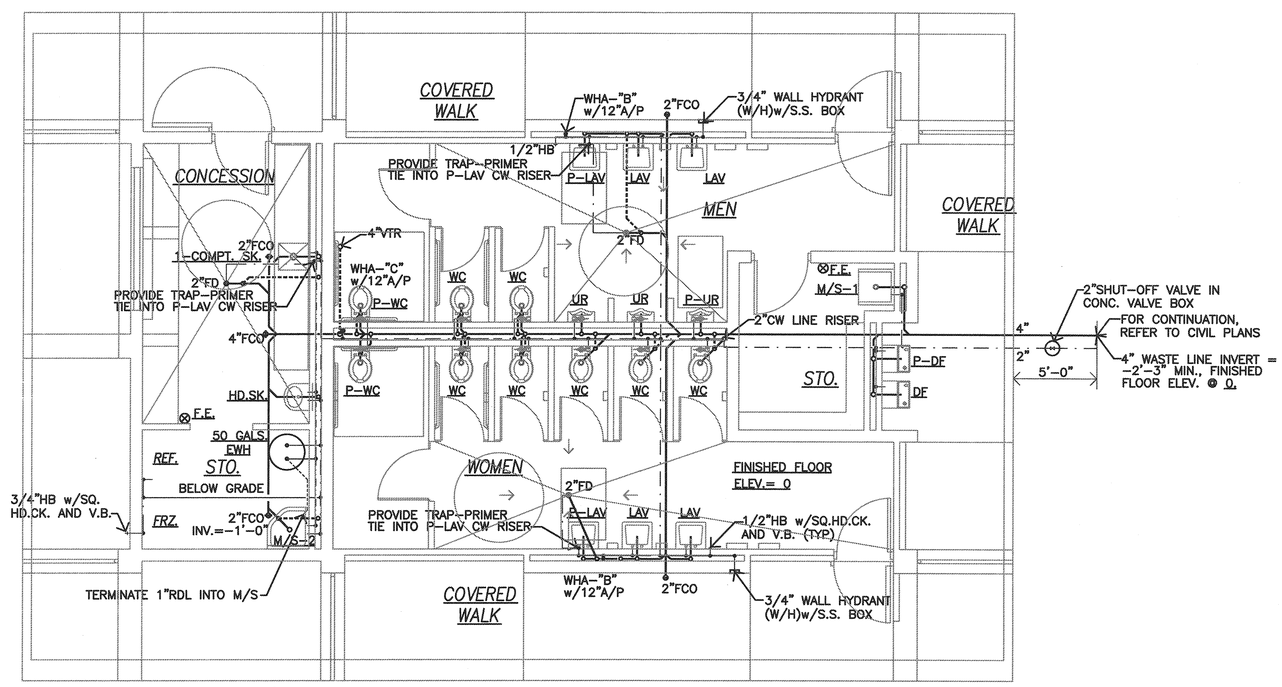

TYPICAL CONCESSION/RESTROOM FLOOR PLAN – PLUMBING

SCALE: 1/4"=1'-0"

(TOTAL OF 2 EACH)

REVISION NO.	SYM.	DESCRIPTION	SHT./OF	DATE	APPROVED

RANDOLPH H. MURAYAMA LICENSED PROFESSIONAL ENGINEER No. 3404-M HAWAII, U.S.A.

THIS WORK WAS PREPARED BY ME OR UNDER MY SUPERVISION AND CONSTRUCTION OF THIS PROJECT WILL BE UNDER MY OBSERVATION.

SIGNATURE — 4/30/16 EXP. DATE

R. M. TOWILL CORPORATION

STATE OF HAWAII
DEPARTMENT OF LAND AND NATURAL RESOURCES
ENGINEERING DIVISION

CENTRAL MAUI REGIONAL SPORTS COMPLEX
PHASE 3
WAILUKU, MAUI, HAWAII

CONCESSION/RESTROOM FLOOR PLAN–PLUMBING AND PLUMBING DIAGRAMS

DESIGNED: ESN	SUBMITTED: --
DRAWN: ESN	DATE: DECEMBER 2015
CHECKED: RHM	SCALE: AS SHOWN
APPROVED: CHIEF ENGINEER — DEC 22 2015 DATE	DRAWING NO. P-2

JOB NO. F93C817D

MECHANICAL EQUIPMENT SCHEDULE

DRINKING FOUNTAIN (P-DF/DF): ELKAY MODEL NO. EHWM217C OR APPROVED EQUAL, FIXTURE TO COMPLIES WITH THE REQUIREMENTS OF THE (AMERICAN WITH DISABILITIES ACT). PROVIDE WALL SURFACE MOUNTING PLATE WITH FLOOR SUPPORT LEGS WITH PIPE CHASE WALL. PROVIDE MODEL NO. 97258C APRON FOR THE HIGHER DRINKING FOUNTAIN AS REQUIRED.

ELECTRIC WATER HEATER (EWH): STATE MOD. NO. CPE 52 20RTA OR EQUAL, 50 GALLONS CAPACITY, 4.5 KW, 208V/1PH/60HZ, STANDARD HEATING ELEMENT UPPER/LOWER AT 4.5 KW NONE SIMULTANEOUS.

FIRE EXTINGUISHER (F.E.): 10 LB. DRY CHEMICAL FIRE EXTINGUISHER, U/L RATED 4A:60B:C. POTTER ROEMER INC. POTTER ROEMER FIG. NO. 3010 OR EQUAL. PROVIDE WALL MOUNTING BRACKET.

MAUI DEPT. OF WATER SUPPLY DOMESTIC FLOW REQUIREMENT:

CENTRAL MAUI REGIONAL PARK WAILUKU, MAUI, HAWAII

TMK: 000000000000 PROJECT NO. 000000000

PROVIDE: MINIMUM 2" WATER METER SIZE

GPM CALCULATED USING 1997 UPC AND FUNDAMENTALS OF PLUMBING DESIGN, TABLE 3-6.
EXISTING IRRIGATION SYSTEM ARE ON SEPARATE WATER METER ON SITE.

	FU	GPM	GPD
A. PROPOSED DOMESTIC (PUBLIC USE)	204	92	40,000
B. EXISTING IRRIGATION (OFF-PEAK HRS)	0	0	0
C. PROPOSED TOTAL	204	92	40,000
D. DOMESTIC TO BE REMOVED/DEMO	0	0	0
E. NET TOTAL (C-D; -CREDIT/+CHARGE)	204	92	40,000
F. EXISTING TO REMAIN	299.2	110	70,000
G. GRAND TOTAL (C+F; ON METER)	503.2	140	110,000

FIXTURE UNIT INFORMATION (FIXTURES): RESTROOM BLDG.

FIXTURE TYPE	QTY	LOW FLOW F.U.	TOTAL F.U.
LAVATORY- (LAV) (PU)	6	1.2	7.2
WATER CLOSET- (WC) (F.V.) (PU)	9	5.6	50.4
URINAL- (UR) (PU)	3	2.8	8.4
DRINKING FOUNTAIN- (D.F.) (PU)	2	2.0	4.0
MOP SINK- (M/S) (PU)	1	3.2	3.2
WALL HYDRANT- (W/H) (PU)	2	5.0	10.0
HOSEBIBB- (HB) (PU)	2	5.0	10.0
TRAP PRIMER	2	1.0	2.0
TOTAL	-	-	95.2

FIXTURE UNIT INFORMATION (FIXTURES): CONCESSION/RESTROOM BLDG.

FIXTURE TYPE	QTY	LOW FLOW F.U.	TOTAL F.U.
LAVATORY- (LAV) (PU)	6	1.2	7.2
WATER CLOSET- (WC) (F.V.) (PU)	9	5.6	50.4
URINAL- (UR) (PU)	3	2.8	8.4
DRINKING FOUNTAIN- (D.F.) (PU)	2	2.0	4.0
1-COMPT. SINK- (1-COMPT.SK) (PU)	1	3.2	3.2
HAND SINK- (HD.SK.) (PU)	1	1.2	1.2
FLOOR SINK- (FLR./SK.) (PU)	2	3.2	6.4
WALL HYDRANT- (W/H) (PU)	2	5.0	10.0
HOSEBIBB- (HB) (PU)	3	5.0	15.0
TRAP PRIMER	3	1.0	3.0
TOTAL	-	-	108.8

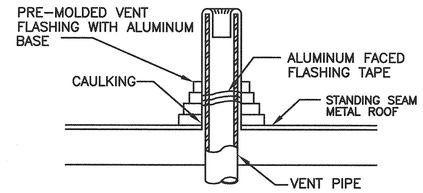

NOTES: 1. REFER TO ARCHITECTURAL PLAN FOR ROOF DETAIL.

VENT THRU ROOF DETAIL
NOT TO SCALE

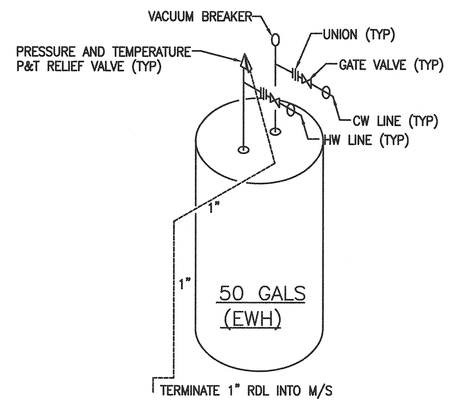

ELECTRIC WATER HEATER (EWH) DETAIL
NOT TO SCALE

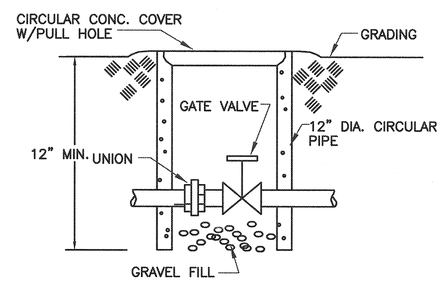

VALVE BOX DETAIL
NOT TO SCALE

REVISION NO.	SYM.	DESCRIPTION	SHT./OF	DATE	APPROVED

STATE OF HAWAII
DEPARTMENT OF LAND AND NATURAL RESOURCES
ENGINEERING DIVISION

CENTRAL MAUI REGIONAL SPORTS COMPLEX
PHASE 3
WAILUKU, MAUI, HAWAII

EQUIPMENT SCHEDULE, DETAILS, WATER CALCULATIONS

RANDOLPH H. MURAYAMA LICENSED PROFESSIONAL ENGINEER No. 3404-M HAWAII, U.S.A.

THIS WORK WAS PREPARED BY ME OR UNDER MY SUPERVISION AND CONSTRUCTION OF THIS PROJECT WILL BE UNDER MY OBSERVATION.

SIGNATURE 4/30/16 EXP. DATE

R. M. TOWILL CORPORATION

DESIGNED: ESN	SUBMITTED: --
DRAWN: ESN	DATE: DECEMBER 2015
CHECKED: RHM	SCALE: AS SHOWN
APPROVED: CHIEF ENGINEER	DEC 2 2 2015 DATE

DRAWING NO. P-3

JOB NO. F93C817D

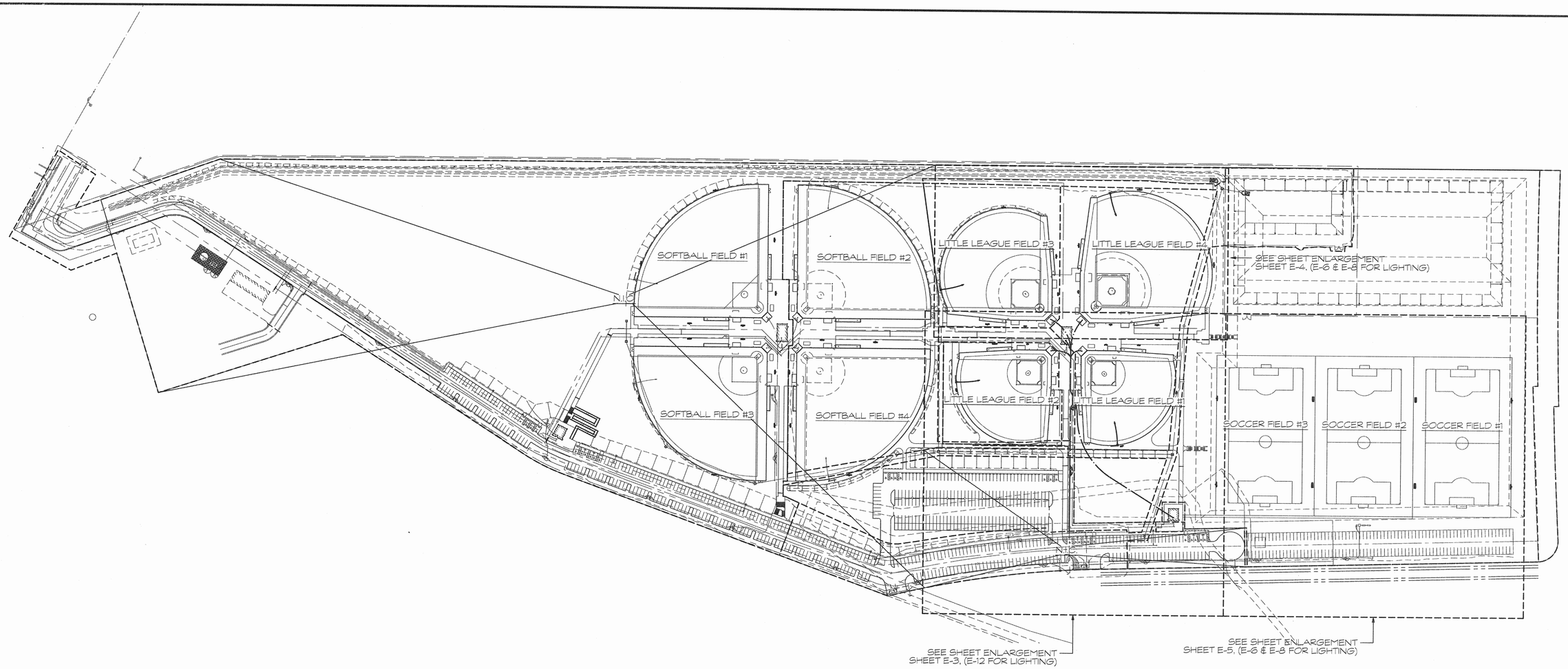

ELECTRICAL SITE PLAN

SCALE: 1" = 120'-0"

COUNTY OF MAUI
MAUI COUNTY CODE, CHAPTER 16.16A ENERGY CODE

TO THE BEST OF MY KNOWLEDGE, THIS PROJECTS DESIGN SUBSTANTIALLY CONFORMS TO THE ENERGY CODE FOR:

____ BUILDING COMPONENT SYSTEMS
X ELECTRICAL COMPONENT SYSTEMS
____ MECHANICAL COMPONENT SYSTEMS

SIGNATURE: DATE: 11-06-15
NAME: DON H. SUZUKI
TITLE: PRINCIPAL
LICENSE NO: 9006-E

MAUI COUNTY CODE CHAPTER 20.35
OUTDOOR LIGHTING

THE ELECTRICAL OUTDOOR LIGHTING SYSTEM AND EQUIPMENT HAVE BEEN REVIEWED BY ME AND TO THE BEST OF MY KNOWLEDGE, THIS DESIGN SUBSTANTIALLY CONFORMS TO THE REQUIREMENTS SPECIFIED IN MAUI COUNTY CODE CHAPTER 20.35 OUTDOOR LIGHTING.

SIGNATURE	PRINCIPAL TITLE
DON H. SUZUKI PRINTED NAME	9006-E STATE OF HAWAII PROFESSIONAL ENGINEER LICENSE NUMBER

REVISION NO.	SYM.	DESCRIPTION	SHT./OF	DATE	APPROVED
	△				

DON H. SUZUKI
LICENSED PROFESSIONAL ENGINEER
NO. 9006-E
HAWAII, U.S.A.

THIS WORK WAS PREPARED BY ME OR UNDER MY SUPERVISION AND CONSTRUCTION OF THIS PROJECT WILL BE UNDER MY OVERSEAVATION.

SIGNATURE 4/30/16 EXP. DATE

R. M. TOWILL CORPORATION
Planning • Engineering • Environmental Services • Photogrammetry • Surveying • Construction Management
808 842 1133 2024 North King Street Suite 200 Honolulu Hawaii 96819-3494

STATE OF HAWAII
DEPARTMENT OF LAND AND NATURAL RESOURCES
ENGINEERING DIVISION

CENTRAL MAUI REGIONAL SPORTS COMPLEX
PHASE 3
WAILUKU, MAUI, HAWAII

ELECTRICAL SITE PLAN, NOTES, & DETAILS

DESIGNED: D.S.	SUBMITTED: ---
DRAWN: K.N./E.S.	DATE: DECEMBER 2015
CHECKED: D.S.	SCALE: AS NOTED
APPROVED: CHIEF ENGINEER	DEC 2 2 2015 DATE

DRAWING NO. E-1

JOB NO. F93C817D

SHEET NO. 76 OF 90 SHEETS

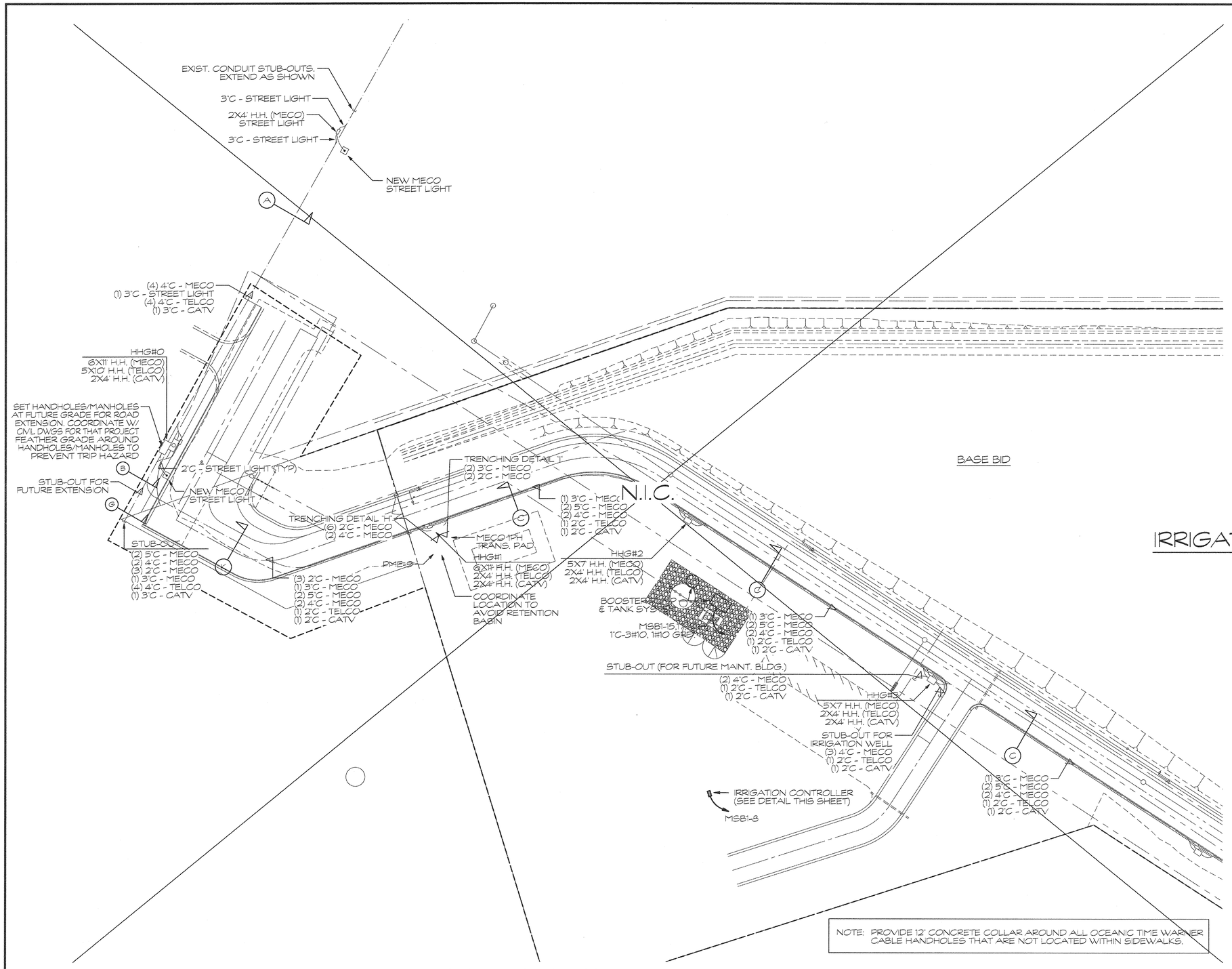

NOTE: PROVIDE 12' CONCRETE COLLAR AROUND ALL OCEANIC TIME WARNER CABLE HANDHOLES THAT ARE NOT LOCATED WITHIN SIDEWALKS.

PARTIAL ELECTRICAL SITE PLAN

SCALE: 1" = 40'-0"

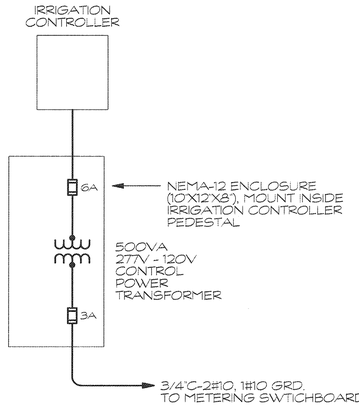

IRRIGATION CONTROLLER POWER DETAIL

NOT TO SCALE

REVISION NO.	SYM.	DESCRIPTION	SHT./OF	DATE	APPROVED
	△				

DON H. SUZUKI
LICENSED PROFESSIONAL ENGINEER
NO 9003-E
HAWAII, U.S.A.

THIS WORK WAS PREPARED BY ME OR UNDER MY SUPERVISION AND CONSTRUCTION OF THIS PROJECT WILL BE UNDER MY OBSERVATION.

SIGNATURE — 4/30/16 EXP. DATE

R. M. TOWILL CORPORATION
Planning • Engineering • Environmental Services • Photogrammetry • Surveying • Construction Management
808 842 1133 2024 North King Street Suite 200 Honolulu Hawaii 96819-3494

STATE OF HAWAII
DEPARTMENT OF LAND AND NATURAL RESOURCES
ENGINEERING DIVISION

CENTRAL MAUI REGIONAL SPORTS COMPLEX
PHASE 3
WAILUKU, MAUI, HAWAII

PARTIAL ELECTRICAL SITE PLAN

DESIGNED: D.S.	SUBMITTED: --
DRAWN: K.N./E.S.	DATE: DECEMBER 2015
CHECKED: D.S.	SCALE: AS NOTED
APPROVED: CHIEF ENGINEER — DEC 2 2 2015 DATE	DRAWING NO. E-2

JOB NO. F93C817D

SHEET NO. 77 OF 90 SHEETS

YOUTH BASEBALL FIELD #1

YOUTH BASEBALL FIELD #2

IRRIGATION CONTROLLER #9 (SEE DETAIL SHEET E-2)

MSB3-6

(2) 1-1/4"C - FACTORY CABLE TO LIFT STATION CONTROL PANEL IN JANITOR RM OF CONCESSION BLDG.

1"C-CONDUIT ONLY.

SEWER LIFT STATION

CONCESSION BLDG. MAIN DISC. SWITCH

IRRIGATION CONTROLLER #5

1"C-2#6, 1#8 GRD.

MSB3-6

IRRIGATION CONTROLLER #8 (SEE DETAIL SHEET E-2)

FUTURE SCORE KEEPERS BOOTH MAIN DISC. SWITCH (TYPICAL OF 4)

1"C-CONDUIT ONLY.

FUTURE SCOREBOARD (VERIFY LOCATION W/ OWNER)

STUB & CAP CONDUIT JUST OUTSIDE FENCE

1"C - POWER TO PANEL @ SCOREKEEPER BOOTH 1"C - SIGNAL TO SCOREBOARD CONTROL CABINET

YOUTH BASEBALL FIELD #4

(FUTURE) SOFTBALL FIELD LIGHTING CONTROLLER

YOUTH BASEBALL FIELD #3

(2) 4"C-4#350 KCMIL

METERING SWITCHBOARD #3 W/DISTRIBUTION SWITCHBOARD 480Y/277V, 3PH, 4W, 800A, NEMA-3R, (316 S.S.)

SOFTBALL FIELD #4

12"X20' H.H. (TELCO) 12"X20' H.H. (CATV)

(2) 4"C - 4#350 KCMIL (1) 2"C - TELCO (1) 2"C - CATV (COORDINATE WITH CIVIL UTILITIES)

1"C - POWER TO PANEL @ SCOREKEEPER BOOTH 1"C - SIGNAL TO SCOREBOARD CONTROL CABINET

LIMITS OF PHASE 3

STUB & CAP CONDUIT JUST OUTSIDE FENCE

N.T.S.

FUTURE SCOREBOARD (VERIFY LOCATION W/ OWNER)

1"C-2#6, 1#8 GRD. - PWR.

HHG#11A 2X4' H.H. (MECO) 2X4' H.H. (TELCO) 2X4' H.H. (CATV) (COORDINATE W/CIVIL UTILITIES)

IRRIGATION CONTROLLER #6

PHASE 2 LIMITS

2X4' H.H. (PWR)

(2) 4"C - 4#350 KCMIL (1) 2"C - TELCO (1) 2"C - CATV (COORDINATE WITH CIVIL UTILITIES)

RESTROOM BLDG. MAIN DISC. SWITCH

NOTE: PROVIDE 12" CONCRETE COLLAR AROUND ALL OCEANIC TIME WARNER CABLE HANDHOLES THAT ARE NOT LOCATED WITHIN SIDEWALKS.

PARTIAL ELECTRICAL SITE PLAN

SCALE: 1" = 40'-0"

REVISION NO.	SYM.	DESCRIPTION	SHT./OF	DATE	APPROVED
	△				

DON H. SUZUKI LICENSED PROFESSIONAL ENGINEER NO. 9006-E HAWAII, U.S.A.

THIS WORK WAS PREPARED BY ME OR UNDER MY SUPERVISION AND CONSTRUCTION OF THIS PROJECT WILL BE UNDER MY OBSERVATION.

SIGNATURE — 4/30/16 EXP. DATE

STATE OF HAWAII
DEPARTMENT OF LAND AND NATURAL RESOURCES
ENGINEERING DIVISION

CENTRAL MAUI REGIONAL SPORTS COMPLEX
PHASE 3
WAILUKU, MAUI, HAWAII

PARTIAL ELECTRICAL SITE PLAN

DESIGNED: D.S.	SUBMITTED: --
DRAWN: K.N./E.S.	DATE: DECEMBER 2015
CHECKED: D.S.	SCALE: AS NOTED
APPROVED: CHIEF ENGINEER — DEC 2 2 2015 DATE	DRAWING NO. E-3

R. M. TOWILL CORPORATION
Planning • Engineering • Environmental Services • Photogrammetry • Surveying • Construction Management
808 842 1133 2024 North King Street Suite 200 Honolulu, Hawaii 96819-3464

JOB NO. F93C817D

SHEET NO. 78 OF 90 SHEETS

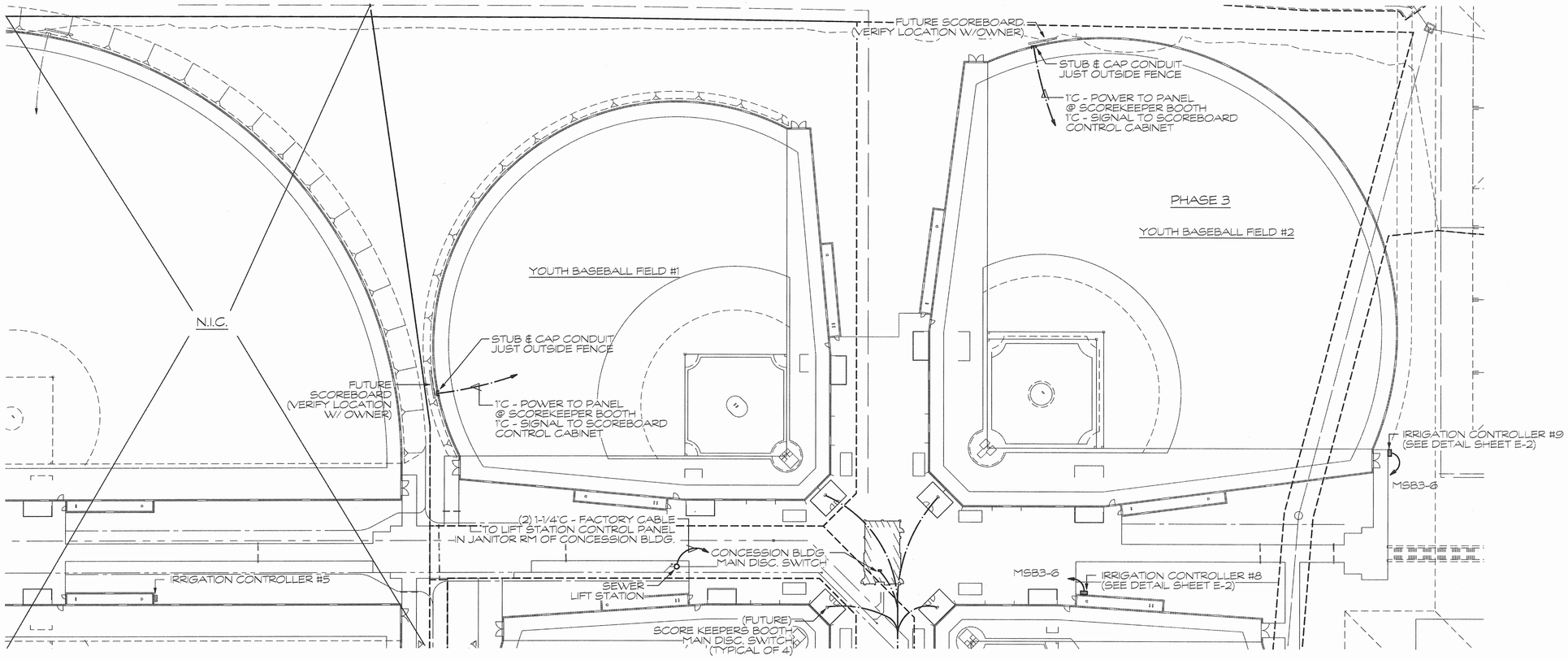

PARTIAL ELECTRICAL SITE PLAN

SCALE: 1" = 40'-0"

REVISION NO.	SYM.	DESCRIPTION	SHT./OF	DATE	APPROVED
	△				

DON H. SUZUKI
LICENSED PROFESSIONAL ENGINEER
NO 9006-E
HAWAII, U.S.A.

THIS WORK WAS PREPARED BY ME OR UNDER MY SUPERVISION AND CONSTRUCTION OF THIS PROJECT WILL BE UNDER MY OBSERVATION.

SIGNATURE — 4/30/16 EXP. DATE

R. M. TOWILL CORPORATION
Planning – Engineering – Environmental Services – Photogrammetry – Surveying – Construction Management
808 946 1133 2024 North King Street Suite 200 Honolulu, Hawaii 96819-2494

STATE OF HAWAII
DEPARTMENT OF LAND AND NATURAL RESOURCES
ENGINEERING DIVISION

CENTRAL MAUI REGIONAL SPORTS COMPLEX
PHASE 3
WAILUKU, MAUI, HAWAII

PARTIAL ELECTRICAL SITE PLAN

DESIGNED: D.S.	SUBMITTED: --
DRAWN: K.N./E.S.	DATE: DECEMBER 2015
CHECKED: D.S.	SCALE: AS NOTED
APPROVED: CHIEF ENGINEER — DEC 2 2 2015 DATE	DRAWING NO. E-4

JOB NO. F93C817D

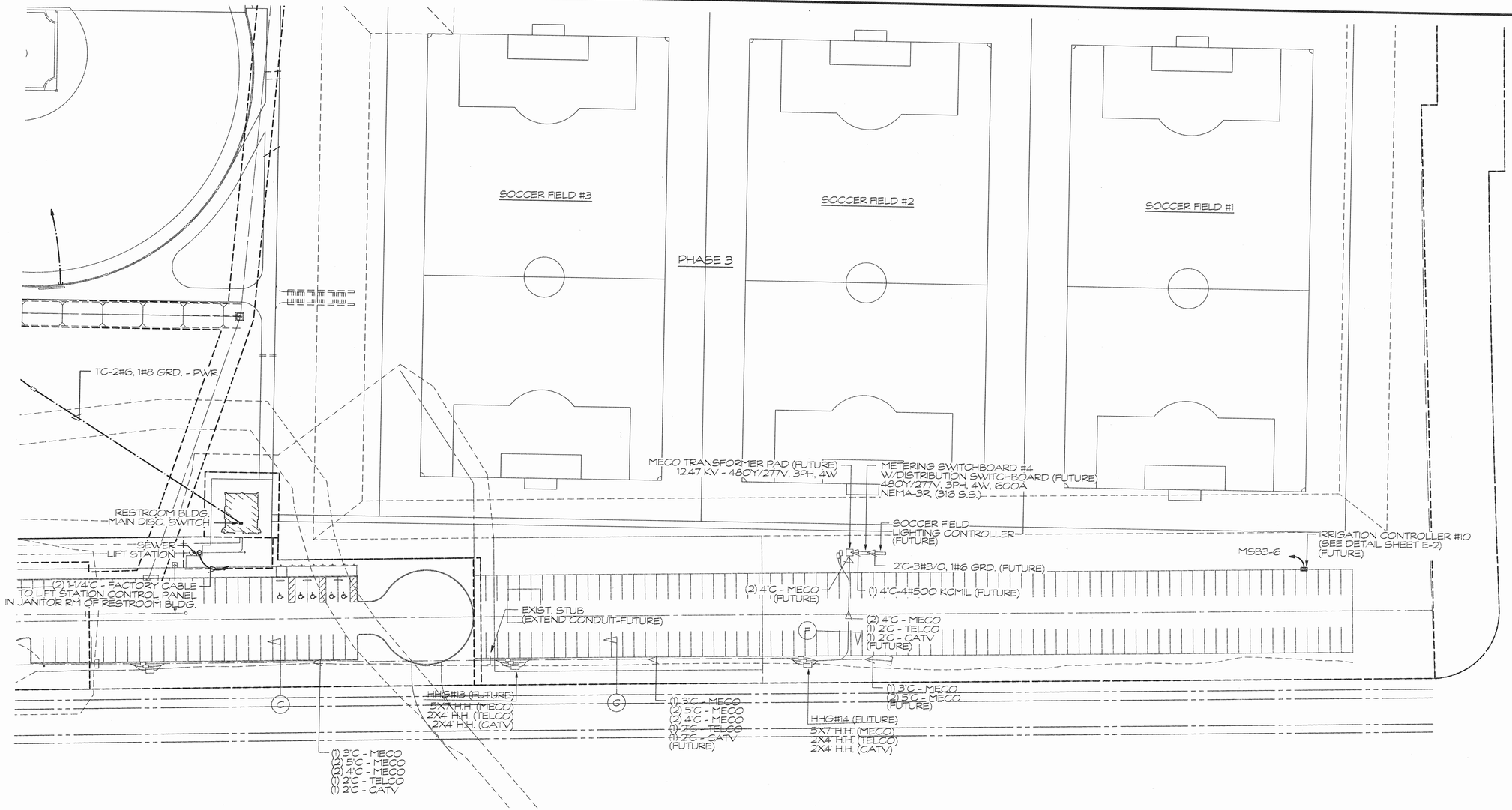

PARTIAL ELECTRICAL SITE PLAN

SCALE: 1" = 40'-0"

REVISION NO.	SYM.	DESCRIPTION	SHT./OF	DATE	APPROVED
	△				

DON H. SUZUKI
LICENSED PROFESSIONAL ENGINEER
NO 9006-E
HAWAII, U.S.A.

THIS WORK WAS PREPARED BY ME OR UNDER MY SUPERVISION AND CONSTRUCTION OF THIS PROJECT WILL BE UNDER MY OBSERVATION.

SIGNATURE — 4/30/16 EXP. DATE

R. M. TOWILL CORPORATION
Planning • Engineering • Environmental Services • Photogrammetry • Surveying • Construction Management
808 842 1133 2024 North King Street, Suite 200 Honolulu, Hawaii 96819-3494

STATE OF HAWAII
DEPARTMENT OF LAND AND NATURAL RESOURCES
ENGINEERING DIVISION

CENTRAL MAUI REGIONAL SPORTS COMPLEX
PHASE 3
WAILUKU, MAUI, HAWAII

PARTIAL ELECTRICAL SITE PLAN

DESIGNED: D.S.	SUBMITTED: --
DRAWN: K.N./E.S.	DATE: DECEMBER 2015
CHECKED: D.S.	SCALE: AS NOTED
APPROVED: CHIEF ENGINEER	DEC 2 2 2015 DATE
	DRAWING NO. E-5

JOB NO. F93C817D

SHEET NO. 80 OF 90 SHEETS

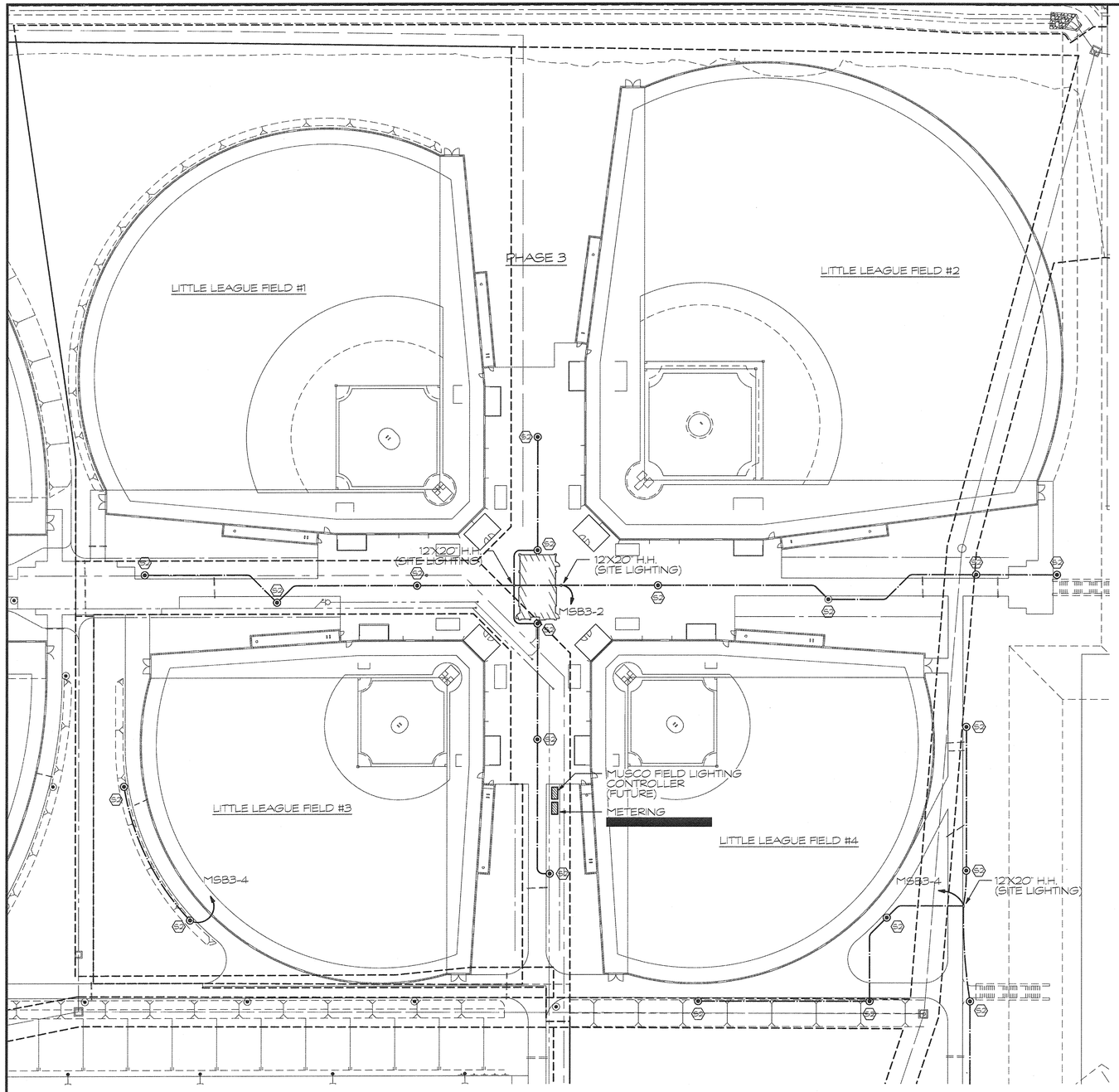

PARTIAL ELECTRICAL SITE LIGHTING PLAN

SCALE: 1" = 40'-0"

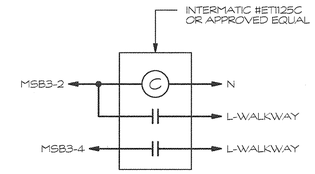

NOTE: INSTALL TIME CLOCK IN SWITCHGEAR IF SPACE ALLOWS. IF NOT, PROVIDE 12"x18"x8" NEMA-4X (316 STAINLESS STEEL) ENCLOSURE WITH BACKPLANE TO MOUNT TIME CLOCK. ENCLOSURE TO BE MOUNTED TO THE SIDE OF THE SWITCHGEAR.

SITE/PARKING LOT LIGHTING CONTROL DETAIL (MSB3)

NOT TO SCALE

REVISION NO.	SYM.	DESCRIPTION	SHT./OF	DATE	APPROVED
	△				

DON H. SUZUKI
LICENSED PROFESSIONAL ENGINEER
NO. 9006-E
HAWAII, U.S.A.

THIS WORK WAS PREPARED BY ME OR UNDER MY SUPERVISION AND CONSTRUCTION OF THIS PROJECT WILL BE UNDER MY OBSERVATION.

SIGNATURE 4/30/16 EXP. DATE

R. M. TOWILL CORPORATION
Planning • Engineering • Environmental Services • Photogrammetry • Surveying • Construction Management
806 642 1133 2024 North King Street Suite 200 Honolulu, Hawaii 96819-3494

STATE OF HAWAII
DEPARTMENT OF LAND AND NATURAL RESOURCES
ENGINEERING DIVISION

CENTRAL MAUI REGIONAL SPORTS COMPLEX
PHASE 3
WAILUKU, MAUI, HAWAII

PARTIAL ELECTRICAL SITE LIGHTING PLAN

DESIGNED: D.S.	SUBMITTED: --
DRAWN: K.N./E.S.	DATE: DECEMBER 2015
CHECKED: D.S.	SCALE: AS NOTED
APPROVED: CHIEF ENGINEER	DEC 2 2 2015 DATE
	DRAWING NO. E-6

JOB NO. F93C817D

SHEET NO. 81 OF 90 SHEETS

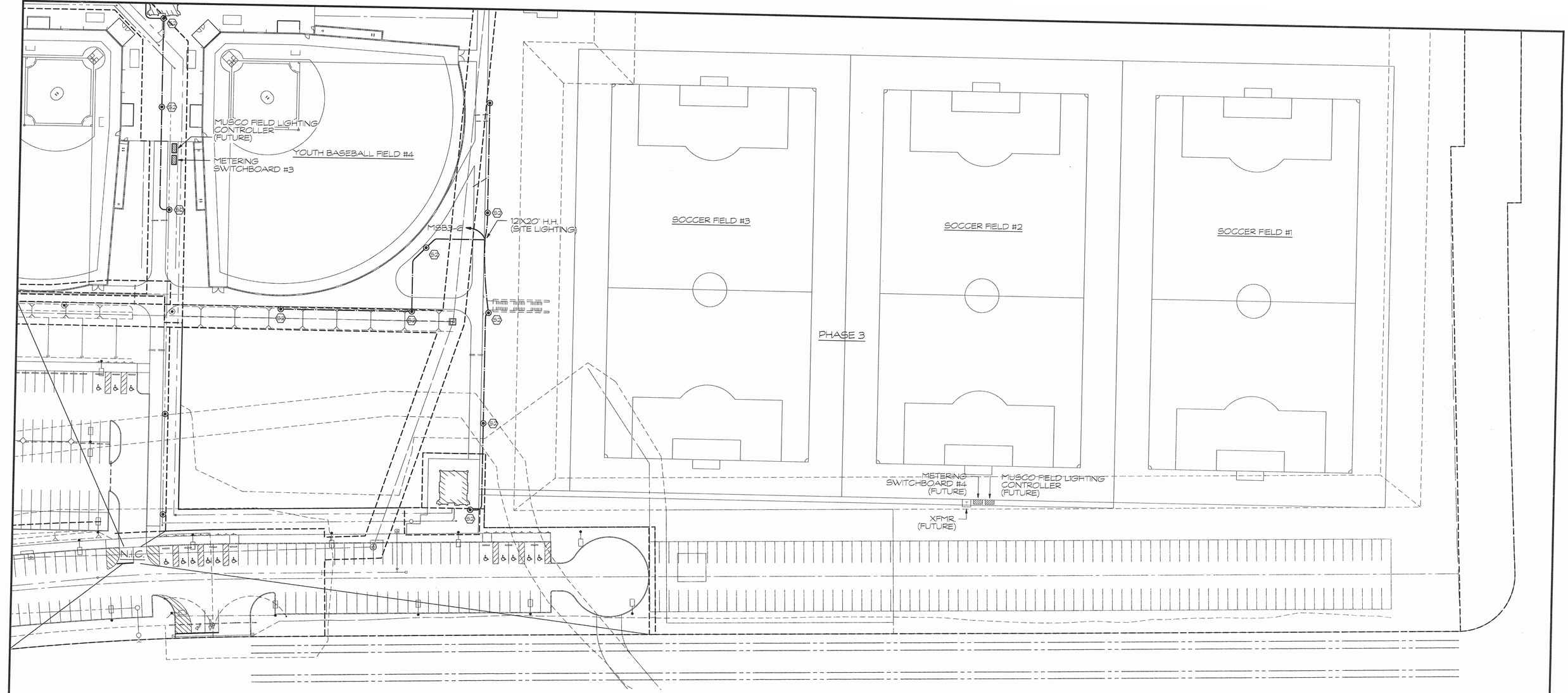

PARTIAL ELECTRICAL SITE LIGHTING PLAN

SCALE: 1" = 40'-0"

REVISION NO.	SYM.	DESCRIPTION	SHT./OF	DATE	APPROVED
	△				

DON H. SUZUKI
LICENSED PROFESSIONAL ENGINEER
NO 9006-E
HAWAII, U.S.A.

THIS WORK WAS PREPARED BY ME OR UNDER MY SUPERVISION AND CONSTRUCTION OF THIS PROJECT WILL BE UNDER MY OBSERVATION.

SIGNATURE — 4/30/16 EXP. DATE

R. M. TOWILL CORPORATION
Planning • Engineering • Environmental Services • Photogrammetry • Surveying • Geographic Information
808 842 1133 2024 North King Street Suite 200 Honolulu, Hawaii 96819-3404

STATE OF HAWAII
DEPARTMENT OF LAND AND NATURAL RESOURCES
ENGINEERING DIVISION

CENTRAL MAUI REGIONAL SPORTS COMPLEX
PHASE 3
WAILUKU, MAUI, HAWAII

PARTIAL ELECTRICAL SITE LIGHTING PLAN

DESIGNED: D.S.	SUBMITTED: --
DRAWN: K.N./E.S.	DATE: DECEMBER 2015
CHECKED: D.S.	SCALE: AS NOTED
APPROVED: CHIEF ENGINEER — DEC 2 2 2015 DATE	DRAWING NO. E-7

JOB NO. F93C817D

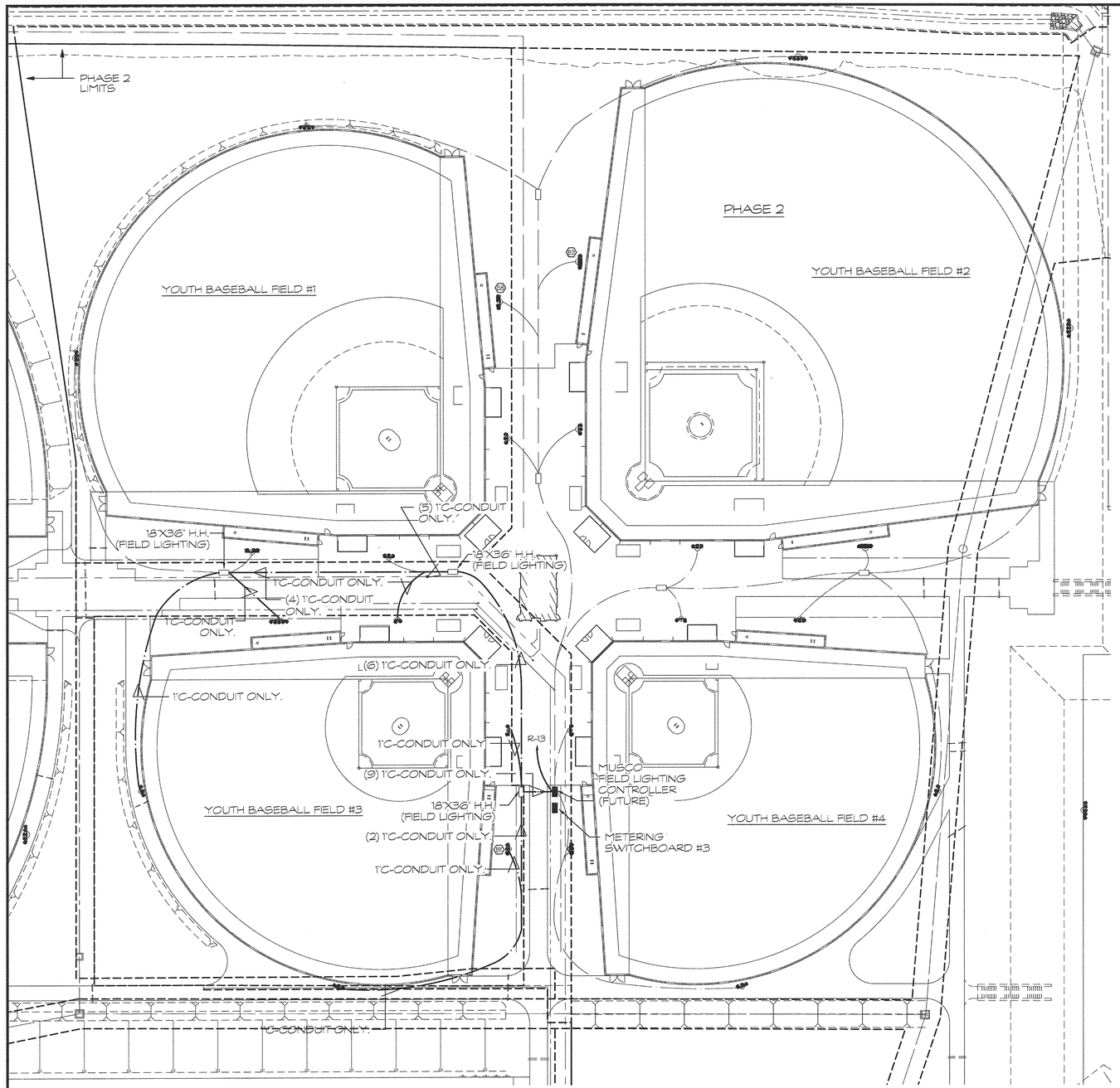

BASEBALL FIELD ELECTRICAL LIGHTING PLANS

SCALE: 1" = 40'-0"

MUSCO LIGHTING LUMINAIRE SCHEDULE
LITTLE LEAGUE BASEBALL FIELD #1
(MUSCO LIGHTING PROJECT NUMBER 163382)

POLE "A13":	70'-0" POLE W/(3) 1500W METAL HALIDE SPORTS LIGHTER LUMINIARES.
POLE "A14":	70'-0" POLE W/(3) 1500W METAL HALIDE SPORTS LIGHTER LUMINIARES.
POLE "B13":	70'-0" POLE W/(5) 1500W METAL HALIDE SPORTS LIGHTER LUMINIARES.
POLE "B14":	70'-0" POLE W/(5) 1500W METAL HALIDE SPORTS LIGHTER LUMINIARES.
POLE "C13":	70'-0" POLE W/(4) 1500W METAL HALIDE SPORTS LIGHTER LUMINIARES.
POLE "C14":	70'-0" POLE W/(4) 1500W METAL HALIDE SPORTS LIGHTER LUMINIARES.

MUSCO LIGHTING LUMINAIRE SCHEDULE
LITTLE LEAGUE BASEBALL FIELD #2
(MUSCO LIGHTING PROJECT NUMBER 163382)

POLE "A17":	70'-0" POLE W/(3) 1500W METAL HALIDE SPORTS LIGHTER LUMINIARES.
POLE "A18":	70'-0" POLE W/(3) 1500W METAL HALIDE SPORTS LIGHTER LUMINIARES.
POLE "B17":	70'-0" POLE W/(7) 1500W METAL HALIDE SPORTS LIGHTER LUMINIARES.
POLE "B18":	70'-0" POLE W/(7) 1500W METAL HALIDE SPORTS LIGHTER LUMINIARES.
POLE "C17":	70'-0" POLE W/(5) 1500W METAL HALIDE SPORTS LIGHTER LUMINIARES.
POLE "C18":	70'-0" POLE W/(5) 1500W METAL HALIDE SPORTS LIGHTER LUMINIARES.

N.I.C.

MUSCO LIGHTING LUMINAIRE SCHEDULE
LITTLE LEAGUE BASEBALL FIELD #3
(MUSCO LIGHTING PROJECT NUMBER 163382)

POLE "A11":	70'-0" POLE W/(2) 1500W METAL HALIDE SPORTS LIGHTER LUMINIARES.
POLE "A12":	70'-0" POLE W/(2) 1500W METAL HALIDE SPORTS LIGHTER LUMINIARES.
POLE "B11":	70'-0" POLE W/(5) 1500W METAL HALIDE SPORTS LIGHTER LUMINIARES.
POLE "B12":	70'-0" POLE W/(5) 1500W METAL HALIDE SPORTS LIGHTER LUMINIARES.
POLE "C11":	70'-0" POLE W/(3) 1500W METAL HALIDE SPORTS LIGHTER LUMINIARES.
POLE "C12":	70'-0" POLE W/(3) 1500W METAL HALIDE SPORTS LIGHTER LUMINIARES.

MUSCO LIGHTING LUMINAIRE SCHEDULE
LITTLE LEAGUE BASEBALL FIELD #4
(MUSCO LIGHTING PROJECT NUMBER 163382)

POLE "A15":	70'-0" POLE W/(2) 1500W METAL HALIDE SPORTS LIGHTER LUMINIARES.
POLE "A16":	70'-0" POLE W/(2) 1500W METAL HALIDE SPORTS LIGHTER LUMINIARES.
POLE "B15":	70'-0" POLE W/(5) 1500W METAL HALIDE SPORTS LIGHTER LUMINIARES.
POLE "B16":	70'-0" POLE W/(5) 1500W METAL HALIDE SPORTS LIGHTER LUMINIARES.
POLE "C15":	70'-0" POLE W/(3) 1500W METAL HALIDE SPORTS LIGHTER LUMINIARES.
POLE "C16":	70'-0" POLE W/(3) 1500W METAL HALIDE SPORTS LIGHTER LUMINIARES.

REVISION NO.	SYM.	DESCRIPTION	SHT./OF	DATE	APPROVED
	△				

DON H. SUZUKI
LICENSED PROFESSIONAL ENGINEER
NO 9006-E
HAWAII, U.S.A.

THIS WORK WAS PREPARED BY ME OR UNDER MY SUPERVISION AND CONSTRUCTION OF THIS PROJECT WILL BE UNDER MY OBSERVATION.

SIGNATURE — 4/30/16 EXP. DATE

R. M. TOWILL CORPORATION
Planning · Surveying · Environmental Services · Photogrammetry · Mapping · Construction Management
808 842 1133 2024 North King Street Suite 200 Honolulu Hawaii 96819-3496

STATE OF HAWAII
DEPARTMENT OF LAND AND NATURAL RESOURCES
ENGINEERING DIVISION

CENTRAL MAUI REGIONAL SPORTS COMPLEX
PHASE 3
WAILUKU, MAUI, HAWAII

BASEBALL FIELD ELECTRICAL LIGHTING PLANS

DESIGNED: D.S.	SUBMITTED: --
DRAWN: K.N./E.S.	DATE: DECEMBER 2015
CHECKED: D.S.	SCALE: AS NOTED

APPROVED: CHIEF ENGINEER — DEC 2 2 2015 DATE

DRAWING NO. E-8

JOB NO. F93C817D

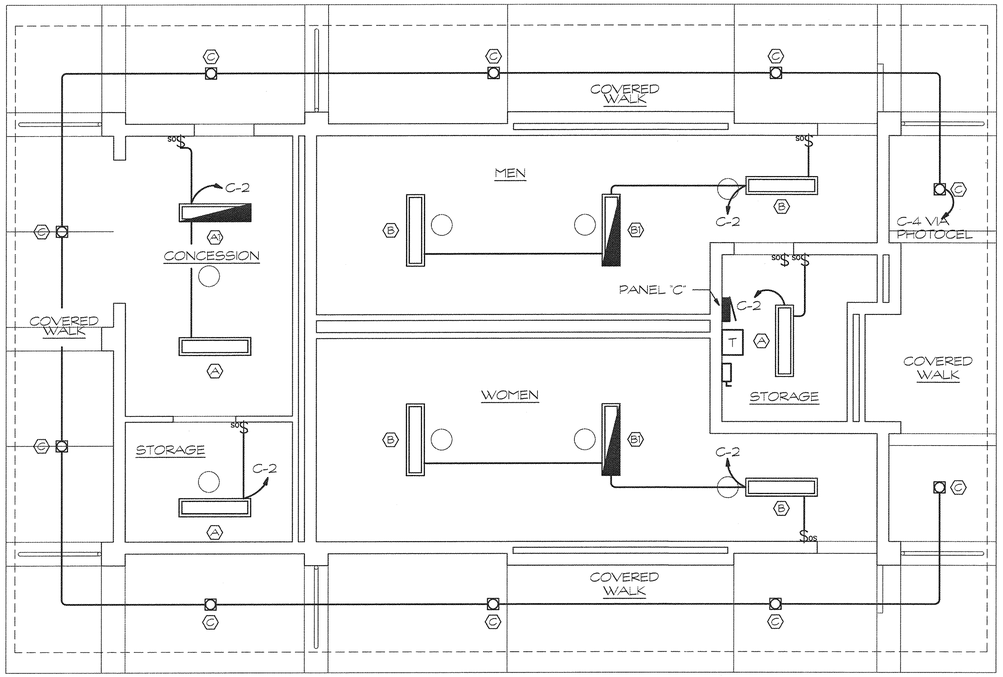

ELECTRICAL LIGHTING PLAN

SCALE: 1/4" = 1'-0"

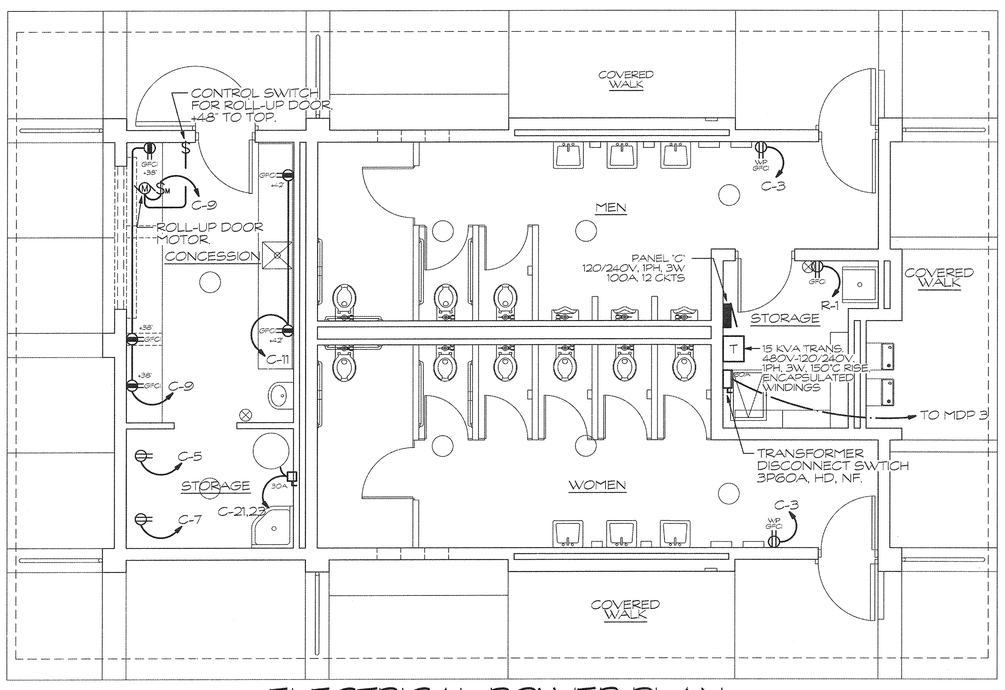

ELECTRICAL POWER PLAN

SCALE: 1/4" = 1'-0"

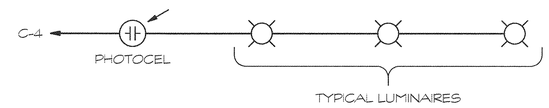

PHOTOCEL DIAGRAM

NOT TO SCALE

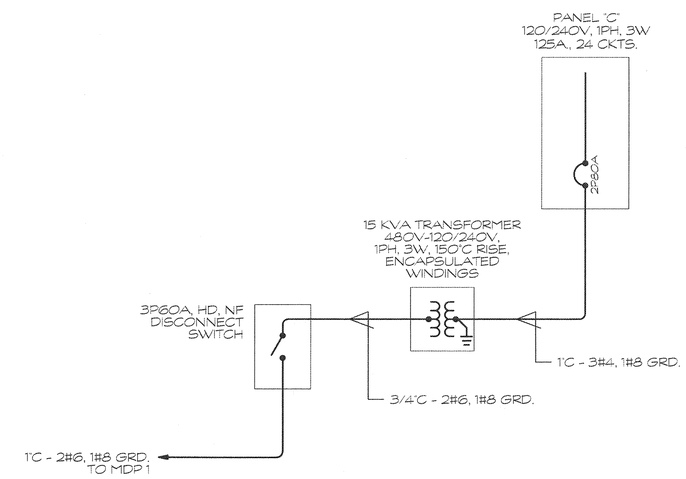

PARTIAL SINGLE LINE DIAGRAM (CONCESSION BLDG.)

NOT TO SCALE

REVISION NO.	SYM.	DESCRIPTION	SHT./OF	DATE	APPROVED
	△				

DON H. SUZUKI LICENSED PROFESSIONAL ENGINEER NO. 9006-E HAWAII, U.S.A.

THIS WORK WAS PREPARED BY ME OR UNDER MY SUPERVISION AND CONSTRUCTION OF THIS PROJECT WILL BE UNDER MY OBSERVATION.

SIGNATURE — 4/30/16 EXP. DATE

R. M. TOWILL CORPORATION
Planning • Engineering • Environmental Services • Photogrammetry • Surveying • Construction Management
808 842 1133 2024 North King Street Suite 200 Honolulu, Hawaii 96819-2494

STATE OF HAWAII
DEPARTMENT OF LAND AND NATURAL RESOURCES
ENGINEERING DIVISION

CENTRAL MAUI REGIONAL SPORTS COMPLEX
PHASE 3
WAILUKU, MAUI, HAWAII

CONCESSION ELECTRICAL POWER & LIGHTING

DESIGNED:	D.S.	SUBMITTED:	--
DRAWN:	K.N./E.S.	DATE:	DECEMBER 2015
CHECKED:	D.S.	SCALE:	AS NOTED
APPROVED: CHIEF ENGINEER	DEC 2 2 2015 DATE	DRAWING NO.	E-9

JOB NO. F93C817D

SHEET NO. 84 OF 90 SHEETS

GENERAL NOTES

1. ALL ELECTRICAL WORK TO BE DONE IN ACCORDANCE WITH THE RULES AND REGULATIONS OF THE COUNTY OF MAUI, THE CURRENT EDITIONS OF THE NATIONAL ELECTRICAL CODE, AND LIFE SAFETY CODE, AND THE AMERICAN ELECTRICIANS HANDBOOK (BY CROFT), AND APPLICABLE INSTRUCTIONS OF MANUFACTURERS OF EQUIPMENT AND MATERIAL SUPPLIED FOR THIS PROJECT.
2. CONTRACTOR TO COMPLY WITH ALL MAUI ELECTRIC COMPANY, HAWAIIAN TELCOM, AND TIME WARNER CABLE OF HAWAII STANDARDS AND REQUIREMENTS TO OBTAIN ELECTRICAL TELEPHONE, AND CABLE TELEVISION SERVICES.
3. ALL MATERIALS TO BE NEW AND BE LISTED BY UNDERWRITERS LABORATORIES AS CONFORMING TO ITS STANDARDS WHERE SUCH STANDARDS EXIST.
4. INSTALLATION TO BE COMPLETE IN EVERY DETAIL AND READY FOR USE. ANY ITEM SUPPLIED BY THE CONTRACTOR DEVELOPING DEFECTS WITHIN ONE (1) YEAR OF FINAL ACCEPTANCE BY OWNER, EXCEPT LAMPS, TO BE REPLACED BY MATERIALS, APPARATUS OR PARTS INCLUDING INSTALLATION LABOR TO MAKE THE DEFECTIVE PORTION CONFORM TO THE TRUE INTENT AND MEANING OF THE DRAWINGS AND SPECIFICATIONS, AT NO ADDITIONAL COST TO THE OWNER. CONTRACTOR TO ALSO WARRANTY THEIR WORKMANSHIP FOR THE SAME ONE (1) YEAR PERIOD TO BE FREE OF DEFECTS.
5. THE CIRCUIT ROUTING AND LAYOUT ARE TYPICAL ONLY AND MAY BE VARIED IN A LOGICAL ORDER. PREPARE A RECORD DRAWING REFLECTING ANY DEVIATIONS TO TURN OVER TO THE ENGINEER AT THE COMPLETION OF THE WORK. ANY DEVICE MAY BE RELOCATED WITHIN 10 FEET BEFORE INSTALLATION AT THE DIRECTION OF THE ARCHITECT/ENGINEER WITHOUT ADDITIONAL COST TO THE OWNER.
6. ALL WORK TO BE PERFORMED IN A NEATLY EXECUTED AND WORKMANLIKE MANNER.
7. ANY DEVIATIONS FROM THE PLANS AND SPECIFICATIONS TO BE REFERRED TO THE ENGINEER PRIOR TO IMPLEMENTATION FOR APPROVAL.
8. CONDUCTORS SHALL BE TYPE THHN/THWN COPPER "UNLESS NOTED ON PLANS". MINIMUM POWER CONDUCTOR SIZE TO BE #12 AWG.
9. VERIFY EQUIPMENT LOCATION, MOUNTING HEIGHT, AND ELECTRICAL REQUIREMENT/ CONNECTION WITH OWNER OR EQUIPMENT SUPPLIER PRIOR TO INSTALLATION. CONTRACTOR TO MAKE ADJUSTMENTS TO MEET REQUIREMENT OF ACTUAL EQUIPMENT INSTALLED. ALL CHANGES TO COMPLY WITH ALL APPLICABLE COUNTY CODES, NATIONAL ELECTRICAL CODE, AND LIFE SAFETY CODES. NOTE CHANGES ON "AS-BUILT" DRAWING SET.
10. ALL WIRING SHALL BE CONCEALED IN WALLS, CEILINGS, FLOORS, AND FURRED SPACES UNLESS OTHERWISE NOTED. ALL WIRING TO BE INSTALLED IN CONDUIT. USE EMT AND COMPRESSION CONNECTORS. USE LIQUID-TIGHT FLEXIBLE METAL CONDUIT FOR ALL EQUIPMENT CONNECTIONS. USE SCHEDULE 40 PVC FOR ALL CONDUITS INSTALLED BELOW GRADE. ALL CONDUITS TO BE INSTALLED PARALLEL AND PERPENDICULAR TO WALLS AND CEILINGS. GROUP RELATED CONDUITS ON A RACK WITH 25% SPARE CAPACITY. SUPPORT CONDUITS PER NATIONAL ELECTRICAL CODE.
11. VERIFY AND CHECK ALL DIMENSIONS AT JOB PRIOR TO PROCEEDING WITH WORK.
12. VERIFY EXISTING ELECTRICAL SYSTEM AND SITE WORKING CONDITIONS PRIOR TO SUBMITTING BID OR PROPOSAL.
13. TORQUE ELECTRICAL CONNECTIONS PER MANUFACTURER'S RECOMMENDED SPECIFICATIONS.
14. BALANCE ELECTRICAL LOAD AT PANEL.
15. REMOVE ANY UN-USED ELECTRICAL WIRING.
16. PROVIDE EQUIPMENT GROUNDING AS REQUIRED BY CODE.
17. WIRING DEVICES SHALL BE SPECIFICATION GRADE, GROUNDING TYPE, COLOR TO BE SPECIFIED BY ARCHITECT. RECEPTACLES TO HAVE NEMA CONFIGURATION TO MATCH CORD CAP ON EQUIPMENT SUPPLIED. SWITCHES TO BE TOGGLE TYPE.

PANEL SCHEDULE: PANEL "C"

Voltage: 120/240V Phase: 1 Wire: 3 Bus Amps: 125A W/2P80A MAIN BRKR. No. Ckts: 24

Mounting: SURFACE NEMA Config: 1 Breaker Type: Plug In - 10,000 AIC Minimum

Ckt	Description	Ph A	Ph B	Brkr	Wire	Ckt	Description	Ph A	Ph B	Brkr	Wire
1	R-STORAGE	1.0		1P20	12	2	L-MENS, WOMENS, STORAGE	1.0		1P20	12
3	R-MEN & WOMEN RM.		1.0			4	L-EXTERIOR		1.0		12
5	R-REFER	1.0				6	SPARE				
7	R-FREEZER		1.0			8					
9	R-COUNTER	1.0				10					
11	R-COUNTER		1.0			12					
13	MUSCO CONTROLLER	0.5				14					
15	SPARE					16					
17						18					
19						20					
21	WATER HEATER	2.3		2P30	10	22					
23			2.3			24					

REVISION NO.	SYM.	DESCRIPTION	SHT./OF	DATE	APPROVED
	△				

DON H. SUZUKI
LICENSED PROFESSIONAL ENGINEER
NO. 9606-E
HAWAII, U.S.A.

THIS WORK WAS PREPARED BY ME OR UNDER MY SUPERVISION AND CONSTRUCTION OF THIS PROJECT WILL BE UNDER MY OBSERVATION.

SIGNATURE 4/30/16 EXP. DATE

R. M. TOWILL CORPORATION
Honolulu • Kaneohe • Kahului/Wailuku • Hilo/Kamuela • Lihue/Kapaa • Kaneohe Engineer
808 842 1133 2024 North King Street Suite 300 Honolulu Hawaii 96819-3404

STATE OF HAWAII
DEPARTMENT OF LAND AND NATURAL RESOURCES
ENGINEERING DIVISION

CENTRAL MAUI REGIONAL SPORTS COMPLEX
PHASE 3
WAILUKU, MAUI, HAWAII

CONCESSION PANEL SCHED. & NOTES

DESIGNED: D.S. SUBMITTED: --
DRAWN: K.N./E.S. DATE: DECEMBER 2015
CHECKED: D.S. SCALE: AS NOTED

APPROVED: CHIEF ENGINEER DEC 2 2 2015 DATE

DRAWING NO. E-10

JOB NO. F93C817D

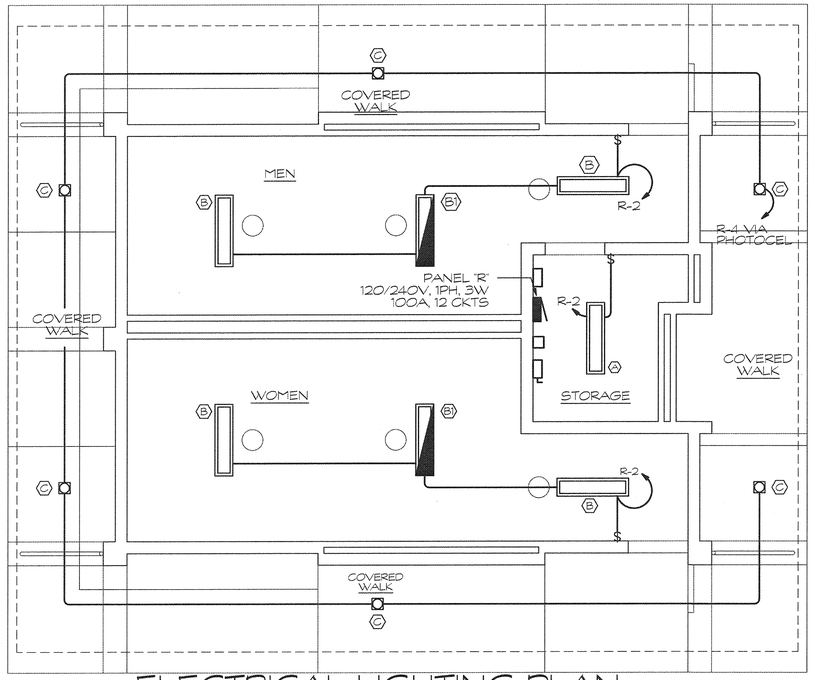

ELECTRICAL LIGHTING PLAN

SCALE: 1/4" = 1'-0"

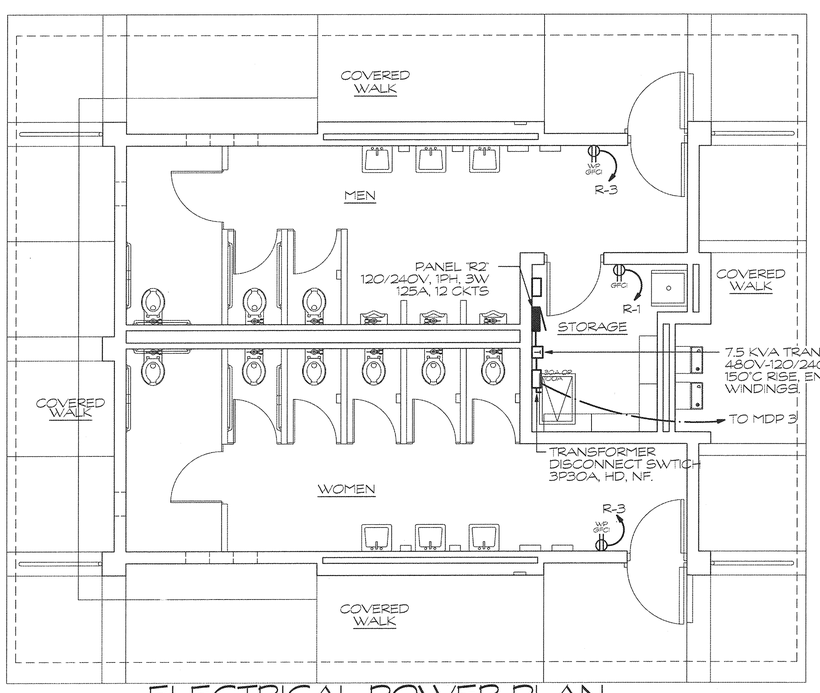

ELECTRICAL POWER PLAN

SCALE: 1/4" = 1'-0"

PANEL SCHEDULE: PANEL "R1"

Voltage: 120/240V Phase: 1 Wire: 3 Bus Amps: 125A W/2P125A MAIN BRKR. No. Ckts: 12
Mounting: SURFACE NEMA Config: 1 Breaker Type: Plug In - 10,000 AIC Minimum

N.I.C.

Ckt	Description	Ph A	Ph B	Brkr	Wire	Ckt	Description	Ph A	Ph B	Brkr	Wire
1	R-STORAGE	1.0		1P20	12	2	L-MENS, WOMENS, STORAGE	1.0		1P20	12
3	R-MEN & WOMEN RM.		1.0		12	4	L-EXTERIOR		1.0	1P20	12
5	MUSCO CONTROLLER	0.5			12	6	EV CHARGER	3.6		2P40	8
7	CELLULAR EQUIP.		0.5		12	8			3.6		
9	EV CHARGER	3.6		2P40	8	10	LIFT STATION	1.0		2P30	10
11			3.6			12			1.0		

PANEL SCHEDULE: PANEL "R2"

Voltage: 120/240V Phase: 1 Wire: 3 Bus Amps: 125A W/2P50A MAIN BRKR. No. Ckts: 12
Mounting: SURFACE NEMA Config: 1 Breaker Type: Plug In - 10,000 AIC Minimum

Ckt	Description	Ph A	Ph B	Brkr	Wire	Ckt	Description	Ph A	Ph B	Brkr	Wire
1	R-STORAGE	1.0		1P20	12	2	L-MENS, WOMENS, STORAGE	1.0		1P20	12
3	R-MEN & WOMEN RM.		1.0		12	4	L-EXTERIOR		1.0		12
5	MUSCO CONTROLLER	0.5			12	6	SPARE				
7	SPARE					8	SPARE				
9	SPARE					10	LIFT STATION	1.0		2P30	10
11	SPARE					12			1.0		

~~RESTROOM BLDG #1 - PHASE 1~~ N.I.C.
RESTROOM BLDG #2 - PHASE 3

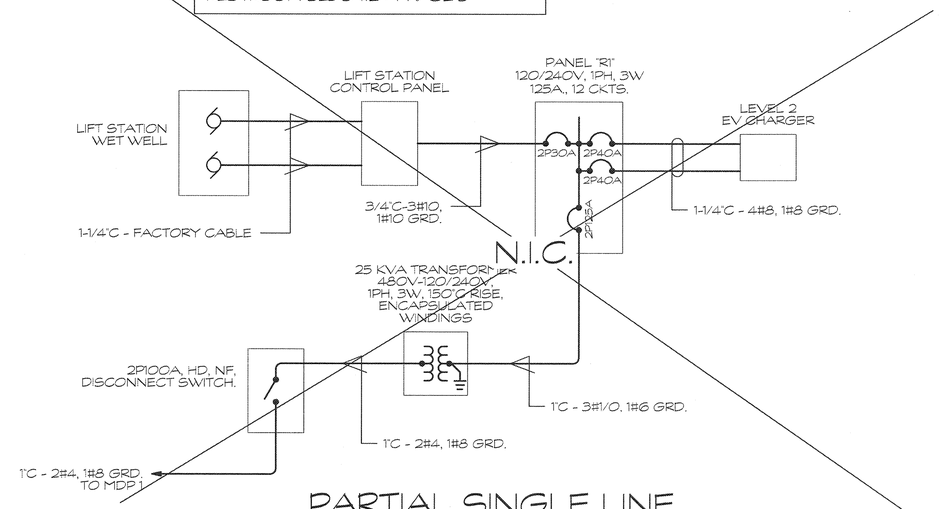

PARTIAL SINGLE LINE DIAGRAM (RESTROOM BLDG. #1)

NOT TO SCALE

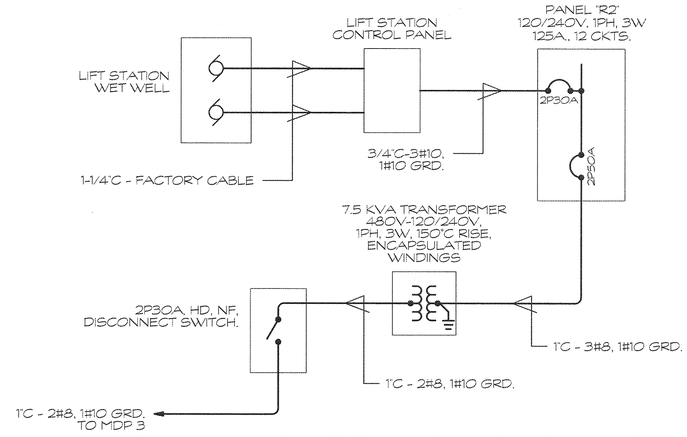

PARTIAL SINGLE LINE DIAGRAM (RESTROOM BLDG. #2)

NOT TO SCALE

REVISION NO.	SYM.	DESCRIPTION	SHT./OF	DATE	APPROVED
	△				

DON H. SUZUKI
LICENSED PROFESSIONAL ENGINEER
NO. 9006-E
HAWAII, U.S.A.

THIS WORK WAS PREPARED BY ME OR UNDER MY SUPERVISION AND CONSTRUCTION OF THIS PROJECT WILL BE UNDER MY OBSERVATION.

SIGNATURE 4/30/16 EXP. DATE

R. M. TOWILL CORPORATION
Planning – Engineering – Environmental Services – Photogrammetry – Surveying – Construction Management
808 842 1133 2024 North King Street Suite 200 Honolulu, Hawaii 96819-3494

STATE OF HAWAII
DEPARTMENT OF LAND AND NATURAL RESOURCES
ENGINEERING DIVISION

CENTRAL MAUI REGIONAL SPORTS COMPLEX
PHASE 3
WAILUKU, MAUI, HAWAII

RESTROOM ELECTRICAL POWER & LIGHTING

DESIGNED: D.S.	SUBMITTED: --
DRAWN: K.N./E.S.	DATE: DECEMBER 2015
CHECKED: D.S.	SCALE: AS NOTED
APPROVED: CHIEF ENGINEER DEC 2 2 2015 DATE	DRAWING NO. E-11

JOB NO. F93C817D

LUMINAIRE SCHEDULE

A	DAYBRITE V2WAB232-UNV-1/2-EB101 OR APPROVED EQUAL	4', 2-LAMP, VAPORTITE FLUORESCENT LUMINAIRE WITH ONE PIECE FIBERGLASS REINFORCED POLYESTER BODY, GASKETED ACRYLIC LENS, & STAINLESS STEEL LATCHES. (2) F32T8 LAMPS (3500K) AND ELECTRONIC BALLAST.
A1	DAYBRITE V2WAB232-UNV-1/2-EB10R-E5 OR APPROVED EQUAL	SAME AS ABOVE EXCEPT WITH EMERGENCY BATTERY BACK-UP.
B	KENALL N1048C232IS1DV OR APPROVED EQUAL	4', 2LAMP, HIGH ABUSE, SURFACE MOUNTED FLUORESCENT LUMINAIRE. (2) F32T8 LAMPS (3500K) AND ELECTRONIC BALLAST.
B1	KENALL N1048C232IS1DVEL OR APPROVED EQUAL	SAME AS ABOVE EXCEPT WITH EMERGENCY BATTERY BACK-UP.
C	DAYBRITE CR1QP-LED-NIC HOUSING WITH CRL6KG11035KU-CRL6RCLR LED MODULE OR APPROVED EQUAL	6" DIA., RECESSED, LED DOWNLIGHT HOUSING WITH 1000 LUMEN 3500K LED MODULE WITH CLEAR REFLECTOR AND WHITE TRIM. UL LISTED FOR WET LOCATION.
S1	KIM LIGHITNG 1SA/ALT3P35/60LSK-277V/BRA/VSF-1SA WITH PRA13-4188-DBA POLE OR APPROVED EQUAL	LED AREA LUMINAIRE WITH EXTRUDED ALUMINUM HOUSING, IP66 OPTICAL MODULE WITH INTERNAL HEAT SINK, 350mA DRIVER WITH 5000K LED, AND 13'-0" TALL ROUND ALUMINUM POLE AND 3'-0" BASE (16'-0" MOUNTING HEIGHT).
S2	ARCHITECTURAL AREA LIGHITNG SLVT-T3-60LED-BW/DBZ WITH PRA4R14-226-DBA POLE OR APPROVED EQUAL	LED AREA LUMINAIRE WITH ONE PIECE CAST ALUMINUM HOUSING, 350mA DRIVER WITH 5000K LED, TYPE III DISTRIBUTION AND 14'-0" TALL ROUND ALUMINUM POLE (14'-0" MOUNTING HEIGHT).
S3	ARCHITECTURAL AREA LIGHITNG SLVT-T5-60LED-BW/DBZ WITH PRA4R14-226-DBA POLE OR APPROVED EQUAL	LED AREA LUMINAIRE WITH ONE PIECE CAST ALUMINUM HOUSING, 350mA DRIVER WITH 5000K LED, TYPE V DISTRIBUTION AND 14'-0" TALL ROUND ALUMINUM POLE (14'-0" MOUNTING HEIGHT).
S4	KIM LIGHITNG 1SA/ALT3P35/60LSK-277V/BRA/VSF-2SB WITH PRA13-4188-DBA POLE OR APPROVED EQUAL	LED AREA LUMINAIRE WITH EXTRUDED ALUMINUM HOUSING, IP66 OPTICAL MODULE WITH INTERNAL HEAT SINK, 350mA DRIVER WITH 5000K LED, AND 13'-0" TALL ROUND ALUMINUM POLE AND 3'-0" BASE (16'-0" MOUNTING HEIGHT).

SYMBOLS LIST

#10	BRANCH CIRCUITS CONCEALED IN CEILING OR WALLS, 2 CONDUCTORS WITH CODE SIZE GROUND UNLESS NOTED OTHERWISE. NUMBER NEXT TO LINE INDICATES SIZE OF CONDUCTORS WHEN OTHER THAN #12.	
	DUPLEX RECEPTACLE, 120V, 20A.	+15" TO BOTTOM UNLESS NOTED.
	DUPLEX RECEPTACLE, 120V, 20A.	MTD ABOVE COUNTER.
$	SINGLE POLE SWITCH, 120V, 20A.	+48" TO TOP UNLESS NOTED.
$3	THREE WAY SWITCH, 120V, 20A.	+48" TO TOP UNLESS NOTED.
$OS	OCCUPANCY SENSOR WALL SWITCH. MATCH PER APPLICATION.	+48" TO TOP UNLESS NOTED.
	250V NON-FUSIBLE DISCONNECT SWITCH. MATCH PER APPLICATION.	
J	JUNCTION BOX.	
	PANELBOARD.	
	1X4' FLUORESCENT LUMINAIRE.	SEE LUMINAIRE SCHEDULE.
	RECESSED DOWNLIGHT.	SEE LUMINAIRE SCHEDULE.
	WALKWAY LUMINAIRE.	SEE LUMINAIRE SCHEDULE.
	PARKING LOT LUMINAIRE.	SEE LUMINAIRE SCHEDULE.
	SPORT FIELD LUMINIARE.	SEE LUMINAIRE SCHEDULE.
GFCI	DENOTES GROUND FAULT CURRENT INTERRUPTER.	
WP	DENOTES WEATHER-PROOF.	

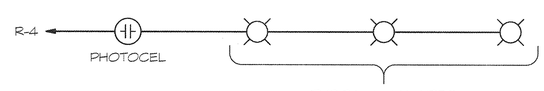

PHOTOCEL DIAGRAM

NOT TO SCALE

REVISION NO.	SYM.	DESCRIPTION	SHT./OF	DATE	APPROVED
	△				

DON H. SUZUKI
LICENSED PROFESSIONAL ENGINEER
NO 9006-E
HAWAII, U.S.A.

THIS WORK WAS PREPARED BY ME OR UNDER MY SUPERVISION AND CONSTRUCTION OF THIS PROJECT WILL BE UNDER MY OBSERVATION.

SIGNATURE — 4/30/16 EXP. DATE

R. M. TOWILL CORPORATION
Planning • Engineering • Construction Services • Photogrammetry • Surveying • Construction Management
(808) 842 1133 2024 North King Street, Suite 200 Honolulu, Hawaii 96819-3404

STATE OF HAWAII
DEPARTMENT OF LAND AND NATURAL RESOURCES
ENGINEERING DIVISION

CENTRAL MAUI REGIONAL SPORTS COMPLEX
PHASE 3
WAILUKU, MAUI, HAWAII

RESTROOM LUMINAIRE SCHED.

DESIGNED: D.S.	SUBMITTED: --
DRAWN: K.N./E.S.	DATE: DECEMBER 2015
CHECKED: D.S.	SCALE: AS NOTED

APPROVED: CHIEF ENGINEER — DEC 2 2 2015 DATE

DRAWING NO. E-12

JOB NO. F93C817D

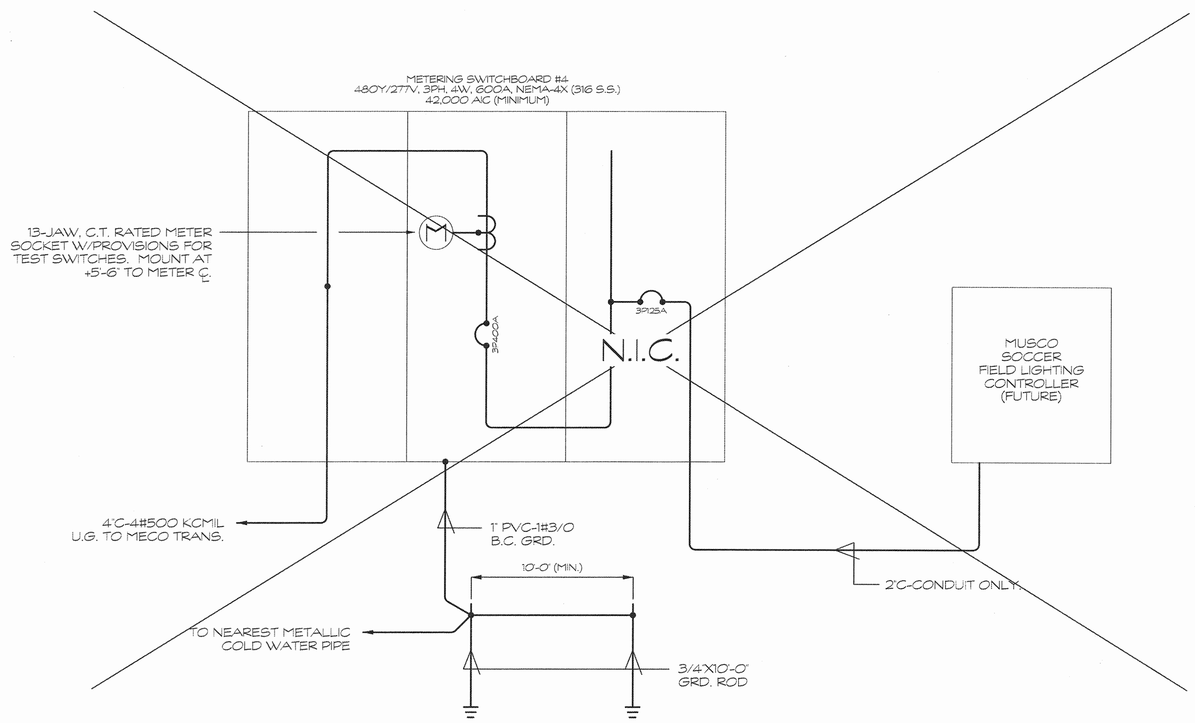

METERING SWITCHBOARD #4 SINGLE LINE DIAGRAM (FUTURE)

NOT TO SCALE

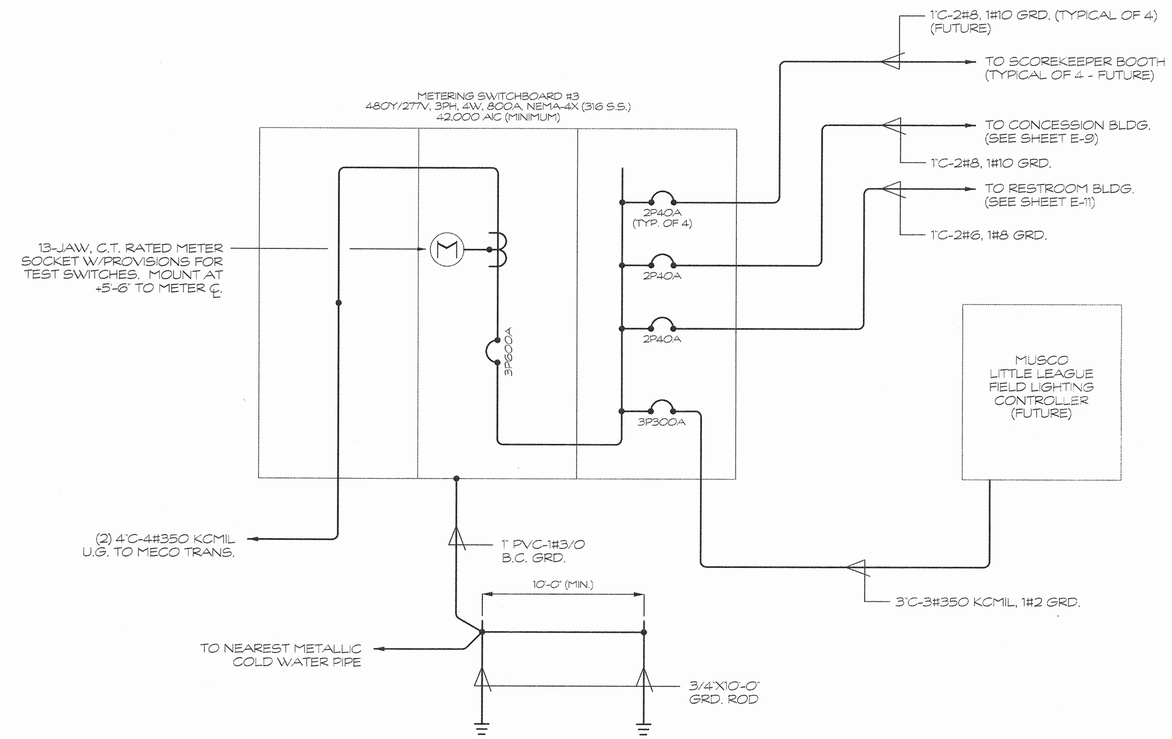

METERING SWITCHBOARD #3 SINGLE LINE DIAGRAM (PHASE 3)

NOT TO SCALE

REVISION NO.	SYM.	DESCRIPTION	SHT./OF	DATE	APPROVED
	△				

DON H. SUZUKI
LICENSED PROFESSIONAL ENGINEER
NO. 9006-E
HAWAII, U.S.A.

THIS WORK WAS PREPARED BY ME OR UNDER MY SUPERVISION AND CONSTRUCTION OF THIS PROJECT WILL BE UNDER MY OBSERVATION.

SIGNATURE — 4/30/16 EXP. DATE

R. M. TOWILL CORPORATION
Realty • Cartography • Geodetic Surveys • Mapping • Aerial Photo Surveys
808 942 1133 2024 North King Street Suite 200 Honolulu, Hawaii 96819-3464

STATE OF HAWAII
DEPARTMENT OF LAND AND NATURAL RESOURCES
ENGINEERING DIVISION

CENTRAL MAUI REGIONAL SPORTS COMPLEX
PHASE 3
WAILUKU, MAUI, HAWAII

METERING SWTICHBD SINGLE LINE DIAGRAMS

DESIGNED: D.S.		SUBMITTED: --	
DRAWN: K.N./E.S.		DATE: DECEMBER 2015	
CHECKED: D.S.		SCALE: AS NOTED	
APPROVED: CHIEF ENGINEER	DEC 2 2 2015 DATE		DRAWING NO. E-13

JOB NO. F93C817D

SHEET NO. 88 OF 90 SHEETS

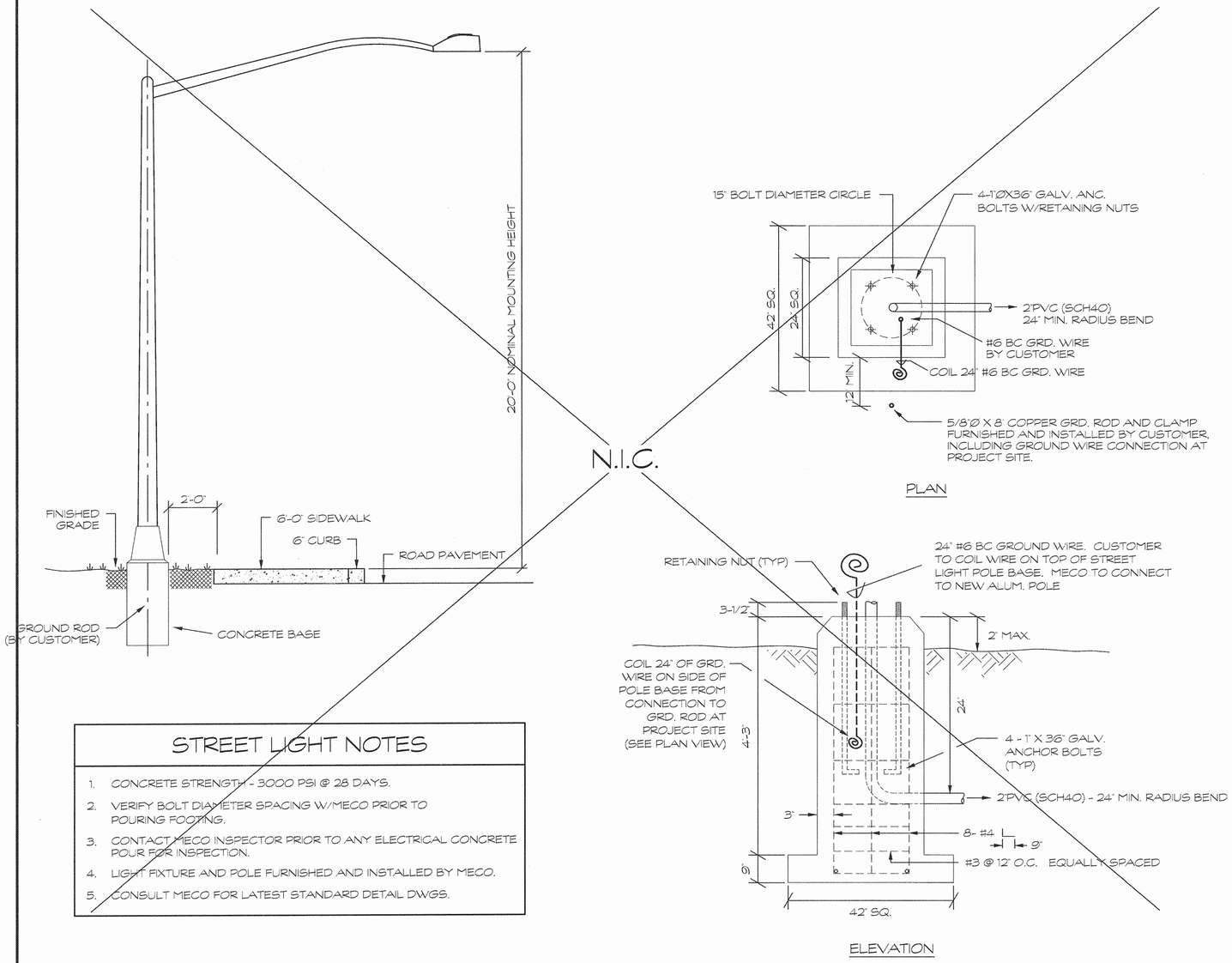

STREET LIGHT NOTES

1. CONCRETE STRENGTH - 3000 PSI @ 28 DAYS.
2. VERIFY BOLT DIAMETER SPACING W/MECO PRIOR TO POURING FOOTING.
3. CONTACT MECO INSPECTOR PRIOR TO ANY ELECTRICAL CONCRETE POUR FOR INSPECTION.
4. LIGHT FIXTURE AND POLE FURNISHED AND INSTALLED BY MECO.
5. CONSULT MECO FOR LATEST STANDARD DETAIL DWGS.

STREET LIGHT POLE DETAIL

NOT TO SCALE

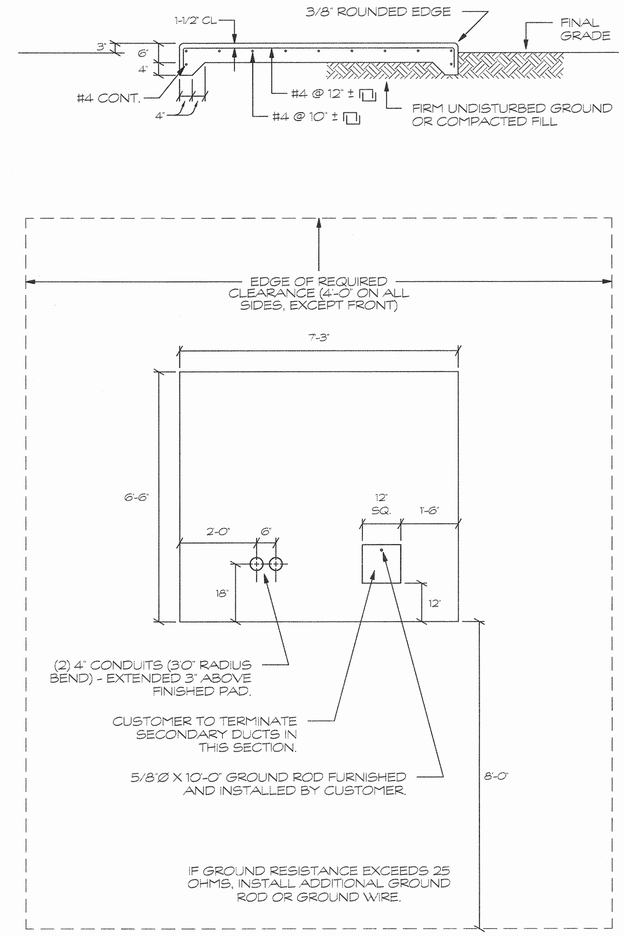

75 TO 750 KVA TRANSFORMER PAD

NOT TO SCALE

REVISION NO.	SYM.	DESCRIPTION	SHT./OF	DATE	APPROVED
	△				

DON H. SUZUKI
LICENSED PROFESSIONAL ENGINEER
NO 9006-E
HAWAII, U.S.A.

THIS WORK WAS PREPARED BY ME OR UNDER MY SUPERVISION AND CONSTRUCTION OF THIS PROJECT WILL BE UNDER MY OBSERVATION.

SIGNATURE 4/30/16 EXP. DATE

R. M. TOWILL CORPORATION

STATE OF HAWAII
DEPARTMENT OF LAND AND NATURAL RESOURCES
ENGINEERING DIVISION

CENTRAL MAUI REGIONAL SPORTS COMPLEX
PHASE 3
WAILUKU, MAUI, HAWAII

UTILITY DETAILS

DESIGNED: D.S.	SUBMITTED: --
DRAWN: K.N./E.S.	DATE: DECEMBER 2015
CHECKED: D.S.	SCALE: AS NOTED
APPROVED: CHIEF ENGINEER	DEC 2 2 2015 DATE
	DRAWING NO. E-14

JOB NO. F93C817D

SHEET NO. 89 OF 90 SHEETS

PANEL SCHEDULE: PANEL "MSB1"

Voltage: 480Y/277V Phase: 3 Wire: 4 Bus Amps: 600A No. Ckts: 42
Mounting: NEMA Config: 4X (316 S.S.) Breaker Type: BOLT ON - 42,000 AIC Minimum

Ckt	Description	Ph A	Ph B	Ph C	Brkr	Wire	Ckt	Description	Ph A	Ph B	Ph C	Brkr	Wire
1	MUSCO	43			3P 200	3/0	2	L-SITE	1.0			1P20	10
3	BASEBALL FIELD		43				4	L-PARKING LOT		1.2			8
5	LIGHTING CNTRLR			43			6	L-PARKING LOT			1.2		8
7	RESTROOM BLDG				2P40	6	8	IRRIGATION CNTRLR	1.5				10
9	(15 KVA TRANS)						10	SPARE					
11	SCOREKEEPER BOOTH 1				2P40	6	12						
13	(15 KVA TRANS)						14						
15	BOOSTER PUMP STATION	3.3			3P30	N.C.	16						
17			3.3				18						
19				3.3			20						
21							22						
23							24						
25							26						
27							28						
29							30						
31							32						
33							34						
35							36						
37							38						
39							40						
41							42						

PANEL SCHEDULE: PANEL "MSB2"

Voltage: 480Y/277V Phase: 3 Wire: 4 Bus Amps: 800A No. Ckts: 42
Mounting: NEMA Config: 4X (316 S.S.) Breaker Type: BOLT ON - 42,000 AIC Minimum

Ckt	Description	Ph A	Ph B	Ph C	Brkr	Wire	Ckt	Description	Ph A	Ph B	Ph C	Brkr	Wire
1	MUSCO	59			3P 300	350	2	L-SITE	1.0			1P20	10
3	SOFTBALL FIELD		59				4	L-SITE		1.0			10
5	LIGHTING CNTRLR			59			6	L-PARKING LOT			1.0		8
7	CONCESSION BLDG				2P40	6	8	IRRIGATION CNTRLR	1.5				10
9	(15 KVA TRANS)						10	L-PARKING LOT		1.0			8
11	SCOREKEEPER BOOTH 1				2P40	6	12	L-PARKING LOT			1.0		8
13	(15 KVA TRANS)						14	SPARE					
15	SCOREKEEPER BOOTH 2				2P40	N.C.	16						
17	(15 KVA TRANS)						18						
19	SCOREKEEPER BOOTH 3				2P40	6	20						
21	(15 KVA TRANS)						22						
23	SCOREKEEPER BOOTH 4				2P40	6	24						
25	(15 KVA TRANS)						26						
27							28						
29							30						
31							32						
33							34						
35							36						
37							38						
39							40						
41							42						

PANEL SCHEDULE: PANEL "MSB3" (PHASE 3)

Voltage: 480Y/277V Phase: 3 Wire: 4 Bus Amps: 800A No. Ckts: 42
Mounting: NEMA Config: 4X (316 S.S.) Breaker Type: BOLT ON - 42,000 AIC Minimum

Ckt	Description	Ph A	Ph B	Ph C	Brkr	Wire	Ckt	Description	Ph A	Ph B	Ph C	Brkr	Wire
1	MUSCO LITTLE	63			3P 300	350	2	L-SITE	1.0			1P20	10
3	LEAGUE FIELD		63				4	L-SITE		1.0			10
5	LIGHTING CNTRLR			63			6	IRRIGATION CNTRLR			1.0		10
7	CONCESSION BLDG				2P40	6	8	SPARE					
9	(15 KVA TRANS)						10						
11	SCOREKEEPER BOOTH 1				2P40	6	12						
13	(15 KVA TRANS)						14						
15	SCOREKEEPER BOOTH 2				2P40	6	16						
17	(15 KVA TRANS)						18						
19	SCOREKEEPER BOOTH 3				2P40	6	20						
21	(15 KVA TRANS)						22						
23	SCOREKEEPER BOOTH 4				2P40	6	24						
25	(15 KVA TRANS)						26						
27	RESTROOM BLDG				2P20	8	28						
29	(7.5 KVA TRANS)						30						
31							32						
33							34						
35							36						
37							38						
39							40						
41							42						

PANEL SCHEDULE: PANEL "MSB4" (FUTURE)

Voltage: 480Y/277V Phase: 3 Wire: 4 Bus Amps: 600A No. Ckts: 42
Mounting: NEMA Config: 4X (316 S.S.) Breaker Type: BOLT ON - 42,000 AIC Minimum

Ckt	Description	Ph A	Ph B	Ph C	Brkr	Wire	Ckt	Description	Ph A	Ph B	Ph C	Brkr	Wire
1	MUSCO	34			3P 200	3/0	2	L-PARKING LOT	1.0			1P20	8
3	SOCCER FIELD		34				4	L-PARKING LOT		1.0			8
5	CONTROLLER			34			6	SPARE					
7							8						
9							10						
11							12						
13							14						
15						N.C.	16						
17							18						
19							20						
21							22						
23							24						
25							26						
27							28						
29							30						
31							32						
33							34						
35							36						
37							38						
39							40						
41							42						

WARNING TAPE

HAWAIIAN TELECOM STANDARD TAPE IS CALLED "DURATEC" AND IS NON-DETECTABLE, WOVEN, REINFORCED FOR COPPER AND FIBER OPTIC CABLES. IT SHALL BE ORANGE IN COLOR, WITH BLACK IMPRANTED MESSAGE 'WARNING-STOP DIGGING-CALL GTE', "COMMUNICATIONS CABLE BURIED BELOW, FAILURE TO COMPLY COULD RESULT IN LEGAL ACTION:. MESSAGE SHALL BE REPEATED EVERY 22-24".

THE TAPE SHALL BE LIGHT STABLE FOR FADE RESISTANCE AND COLOR STABLE WHEN BURIED. ALL TAPE SHALL BE 4" WIDE AND NORMALLY BE IN 1000' ROLLS FOR TRENCHING. TAPE SHALL BE 8 MIL (.008") OVERALL THICKNESS, WARP ORIENTED, COATED AND CLOSED CROSS-WOVEN, RUBBER MODIFIED, ULTRA HIGH MOLECULAR WEIGHT, 100% VIRGIN POLYETHYLENE; WITH NO LESS THAN 670# OF TENSILE BREAK STRENGTH PER 4" WIDTH. IT SHALL BE ORANGE COLOR IMPREGNATED WITH ALKALI AND ACID STABLE, LEAD FREE ORGANIC PIGMENTS SUITABLE FOR DIRECT BURIAL. TAPE SHALL ALSO BE ULTRAVIOLET LIGHT COLOR FAST FOR SUNLIGHT EXPPOSURE.

OCEANIC CABLEVISION NOTES

1. ALL CONDUITS AND PULLBOXES TO BE FIELD TONED BY THE DEPT. OF WATER SUPPLY, HAWAIIAN TELEPHONE CO., MAUI ELECTRIC CO. LTD. AND FIELD ROUTED BEFORE INSTALLATION.
2. ALL SERVICE LATERALS SHALL BE 1" CONDUIT, SCHEDULE 40 WITH 90 ELECTRICAL SWEEPS FOR STUB-UPS.
3. ALL MAIN FEED CONDUITS SHALL BE 2" SCHEDULE 40 FOR UNDER ROADWAYS.
4. FILL SHALL BE 13" DEPTH BLACK OR BEACH SAND OR EARTH AND GRAVEL. IF EARTH AND GRAVEL ARE USED, MAXIMUM ROCK SIZE SHALL BE 1" AND MIXTURE SHALL CONTAIN NOT MORE THAN 50% BY VOLUME OF ROCK PARTICLES.
5. FILL SHALL HAVE 6" RADIUS AROUND CONDUIT AND DIRT SAME AS NOTE #4 EXCEPT THAT IF EARTH AND GRAVEL ARE USED, THE MIXTURE MUST PASS A 1/2" SCREEN AND CONTAIN NOT MORE THAN 20% BY VOLUME OF ROCK PARTICLES.
6. CONTRACTOR SHALL INSTALL PULLSTRING AND CAP CONDUIT WITH DUCT SEAL.

MECO NOTES

1. THE CUSTOMER IS TO FURNISH MATERIALS AND CONSTRUCT THE FACILITIES FOR THE UNDERGROUND INFRASTRUCTURE. INCLUDING THE HANDHOLES, THE CONCRETE PADS, PRIMARY AND SECONDARY DUCTS, AND ANCHOR BOLTS. ROCK FILL AROUND THE PAD, WHEN REQUIRED, SHALL ALSO BE FURNISHED AND INSTALLED BY THE CUSTOMER.
2. GRADE SUFFICIENTLY AROUND THE LOT SITE TO PREVENT FUTURE FILLING IN OF THE LOT. WHEN REQUIRED, THE CUSTOMER SHALL CONSTRUCT A RETAINING WALL OF SUITABLE MATERIAL TO PREVENT FUTURE FILLING IN OF THE LOT IN THE VICINITY OF THE PADS AND HANDHOLES.
3. COMPACT BY ROLLING THE SITE IN ACCORDANCE WITH COUNTY OF MAUI STANDARD SPECIFICATIONS FOR COMPACTING SIDEWALK AREAS.
4. PRIMARY DUCTS; THE BENDS INTO THE PRIMARY COMPARTMENT OF THE PADMOUNTED TRANSFORMER MAY BE GALVANIZED STEEL CONDUIT OR SCHEDULE 40 PVC, WITH A MINIMUM 3'-0" RADIUS.
5. MECO SHALL HAVE 24-HOUR A DAY ACCESS TO THE TRANSFORMERS AND SWITCHGEAR WITHOUT GOING THROUGH LOCKED AREAS.
6. MECO SHALL HAVE A MINIMUM 10 FT. WIDE VEHICULAR ACCESS THAT IS APPROVED BY MECO TO EACH TRANSFORMER AND HANDHOLE SITE.
7. NO PAD OR HANDHOLE SHALL BE INSTALL WITHIN THE DRAINAGE EASEMENT AREA.
8. BENDS DUE TO CHANGES OF GRADE ARE TO HAVE A MINIMUM RADIUS OF 20'-0". THE CUSTOMER IS TO INSTALL THE DUCTS AS REQUIRED BY MECO AND IN ACCORDANCE WITH THE DUCT ENCASEMENT DETAILS. THE CUSTOMER SHALL VERIFY DUCT AND CONCRETE JACKET REQUIREMENTS WITH THE MECO INSPECTOR. JOB SITE CONDITIONS MAY REQUIRE ADJUSTMENTS. MAUI ELECTRIC CO. RESERVES FINAL APPROVAL OF ALL WORK DONE BY THE CUSTOMER.
9. THE COPPER WELD GROUND ROD 5/8"X8'-0" FOR THE TRANSFORMER AND SWITCHGEAR PADS, TO BE SUPPLIED BY THE CUSTOMER, IS TO BE INSTALLED BY THE CUSTOMER IN EACH PAD AS SHOWN ON THE DRAWING. THE RODS ARE TO EXTEND 6" ABOVE THE FINISHED PAD. TIE RODS TO A GALV. IRON OR COPPER WATER PIPE WITH #1/0 COPPER WIRE. THIS MAY BE ELIMINATED WHERE THE WATER PIPE IS MORE THAN 25 FEET AWAY.
10. NO PERMANENT OR TEMPORARY STRUCTURE OR OBJECT SHALL BE ERECTED OR PLACED WITHIN THE INDICATED CLEAR SPACE.
11. THE FRONT SIDES OF THE CONCRETE PADS SHALL ALWAYS BE LOCATED TO FACE THE VEHICULAR ACCESS (SEE NOTES 4 & 5) AND SHALL BE FREE AND CLEAR OF ANY CONSTRUCTION OR PARKED VEHICLE AT ALL TIMES.
12. ALL DUCTLINES SHALL CONTAIN A "MULE TAPE" PULL LINE (WESCO. CAT. #0725-92000 OR EQUIVALENT).
13. SELECT BACKFILL: AS SPECIFIED IN MECO'S SERVICE INSTALLATION MANUAL.
14. MAUI ELECTRIC'S FACILITIES SHALL BE INSTALLED IN READILY ACCESSIBLE, PREFERABLY UNLOCKED AREAS. HOWEVER, WHEN MAUI ELECTRIC FACILITIES OR ANY OTHER EQUIPMENT ACCESSIBLE TO MECO IS LOCATED IN ENCLOSED AREAS WHICH ARE LOCKED, THOSE AREAS SHALL BE PROVIDED WITH GATES, DOORS OR COVERS WHICH ARE PADLOCKABLE OR FITTED WITH A CYLINDER TYPE "BEST" BRAND UNIVERSAL LOCK. MECO WILL PROVIDE THE PADLOCK OR CORE.
15. TWO PRIMARY DUCTS ARE REQUIRED TO FACILITATE MAINTENANCE OR SERVICE IN THE FUTURE. HORIZONTAL BENDS ARE TO HAVE A MINIMUM RADIUS OF 20'-0".
16. THE TRANSFORMER PADS ARE TO BE LOCATED BY THE CUSTOMER AND APPROVED BY MECO. MECO SHALL PROVIDE THE CUSTOMER WITH THE TRANSFORMER SOUND LEVEL FOR EACH PROJECT AND ONLY STANDARD NEMA SOUND LEVEL TRANSFORMERS SHALL BE INSTALLED. IT WILL BE THE RESPONSIBILITY OF THE CUSTOMER TO MEET THE ALLOWABLE SOUND LEVEL LIMITS AT THE PROPERTY LINES AND ALSO CONSIDER THE PROXIMITY OF THE TRANSFORMER TO THE BUILDINGS, WINDOWS, WALLS, ETC. ON HIS PROPERTY TO LIMIT ANY OBJECTIONABLE NOISE TO OCCUPANTS IN THAT PROPERTY.
17. INSPECTION: THREE WORKING DAYS ADVANCE NOTICE REQUIRED BY MECO FOR ANY INSPECTION SERVICE.

(CALL MECO - TELEPHONE NO. 871-7777)

REVISION NO.	SYM.	DESCRIPTION	SHT./OF	DATE	APPROVED
	△				

DON H. SUZUKI
LICENSED PROFESSIONAL ENGINEER
NO. 9006-E
HAWAII, U.S.A.

THIS WORK WAS PREPARED BY ME OR UNDER MY SUPERVISION AND CONSTRUCTION OF THIS PROJECT WILL BE UNDER MY OBSERVATION.

SIGNATURE 4/30/16 EXP. DATE

R. M. TOWILL CORPORATION
Planning • Engineering • Environmental Services • Photogrammetry • Surveying • Construction Management
808 842 1133 2024 North King Street Suite 200 Honolulu, Hawaii 96819-3464

STATE OF HAWAII
DEPARTMENT OF LAND AND NATURAL RESOURCES
ENGINEERING DIVISION

CENTRAL MAUI REGIONAL SPORTS COMPLEX
PHASE 3
WAILUKU, MAUI, HAWAII

UTILITY AND COUNTY NOTES, AND PANELS

DESIGNED: D.S.	SUBMITTED: --
DRAWN: K.N./E.S.	DATE: DECEMBER 2015
CHECKED: D.S.	SCALE: AS NOTED
APPROVED: CHIEF ENGINEER	DEC 2 2 2015 DATE

DRAWING NO. E-15

JOB NO. F93C817D

SHEET NO. 90 OF 90 SHEETS