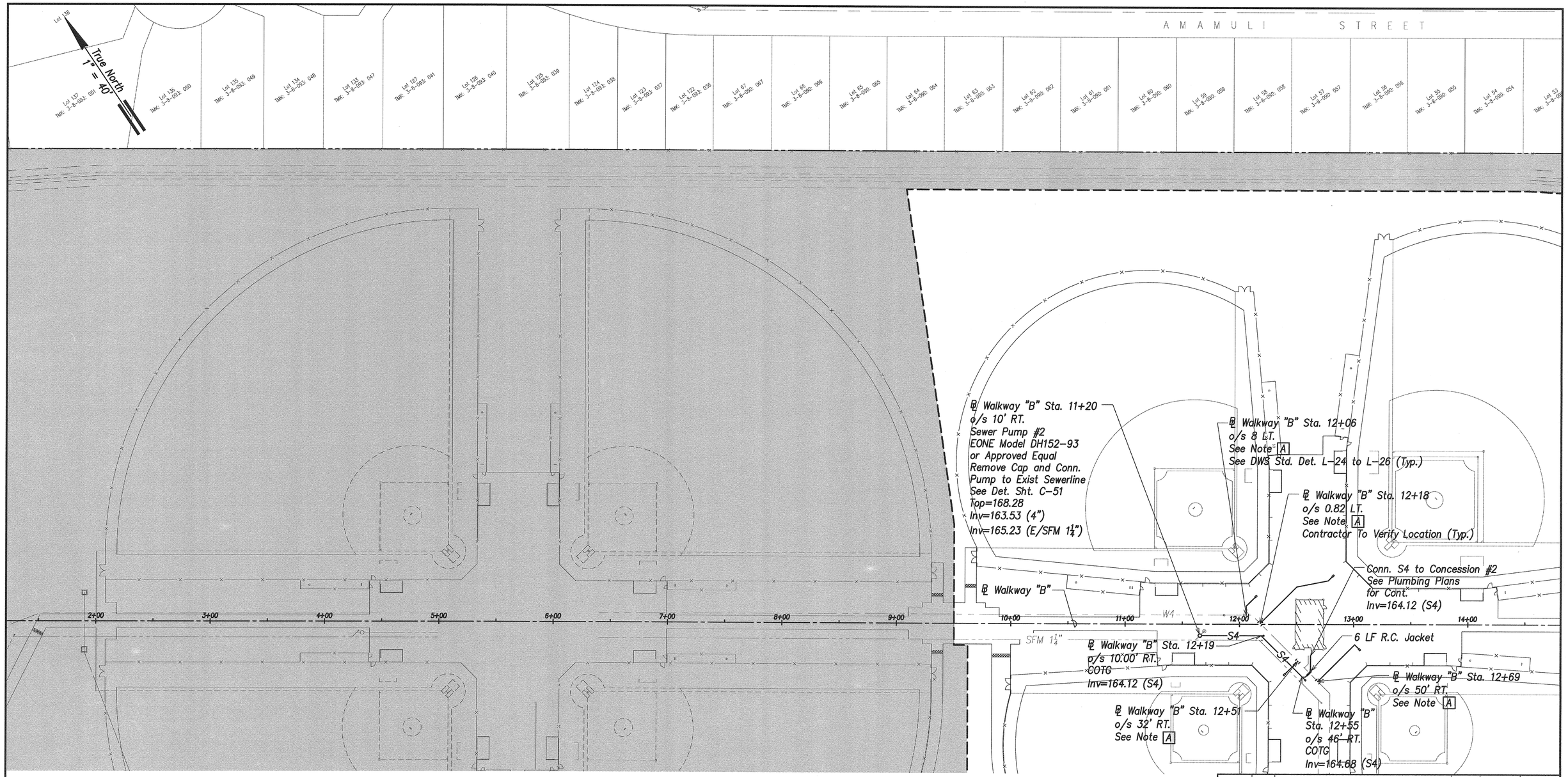

Utility Plan – 2

Scale: 1" = 40'

Legend

- Property Line
- Exist. Easement
- Project Limit
- N.I.C. (Ph. 1 & Ph. 2)

Water Lateral Note:

A 1 – Type "A" 3/4" Lateral
1 – Type "X" 5/8" Meter Box

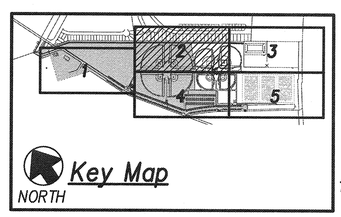

Key Map
NORTH

1" = 40'

Graphic Scale:
40' 20' 0' 40' 80'
Scale In Feet

REVISION NO.	SYM.	DESCRIPTION	SHT./OF	DATE	APPROVED

GORDON T. RING
LICENSED PROFESSIONAL ENGINEER
No. 9300-C
HAWAII, U.S.A.

THIS WORK WAS PREPARED BY ME OR UNDER MY SUPERVISION AND CONSTRUCTION OF THIS PROJECT WILL BE UNDER MY OBSERVATION.

SIGNATURE 4/30/16 EXP. DATE

R. M. TOWILL CORPORATION
Planning – Engineering – Environmental Services – Photogrammetry – Surveying – Construction Management
808 842 1133 2024 North King Street Suite 200 Honolulu, Hawaii 96819-2041

STATE OF HAWAII
DEPARTMENT OF LAND AND NATURAL RESOURCES
ENGINEERING DIVISION

CENTRAL MAUI REGIONAL SPORTS COMPLEX
PHASE 3
WAILUKU, MAUI, HAWAII

UTILITY PLAN – 2

DESIGNED: GR/NN/JP	SUBMITTED: --
DRAWN: GR/NN/JP	DATE: DECEMBER 2015
CHECKED: GTR	SCALE: AS SHOWN
APPROVED: CHIEF ENGINEER	DEC 2 2 2015 DATE
	DRAWING NO. C-23

JOB NO. F93C817D

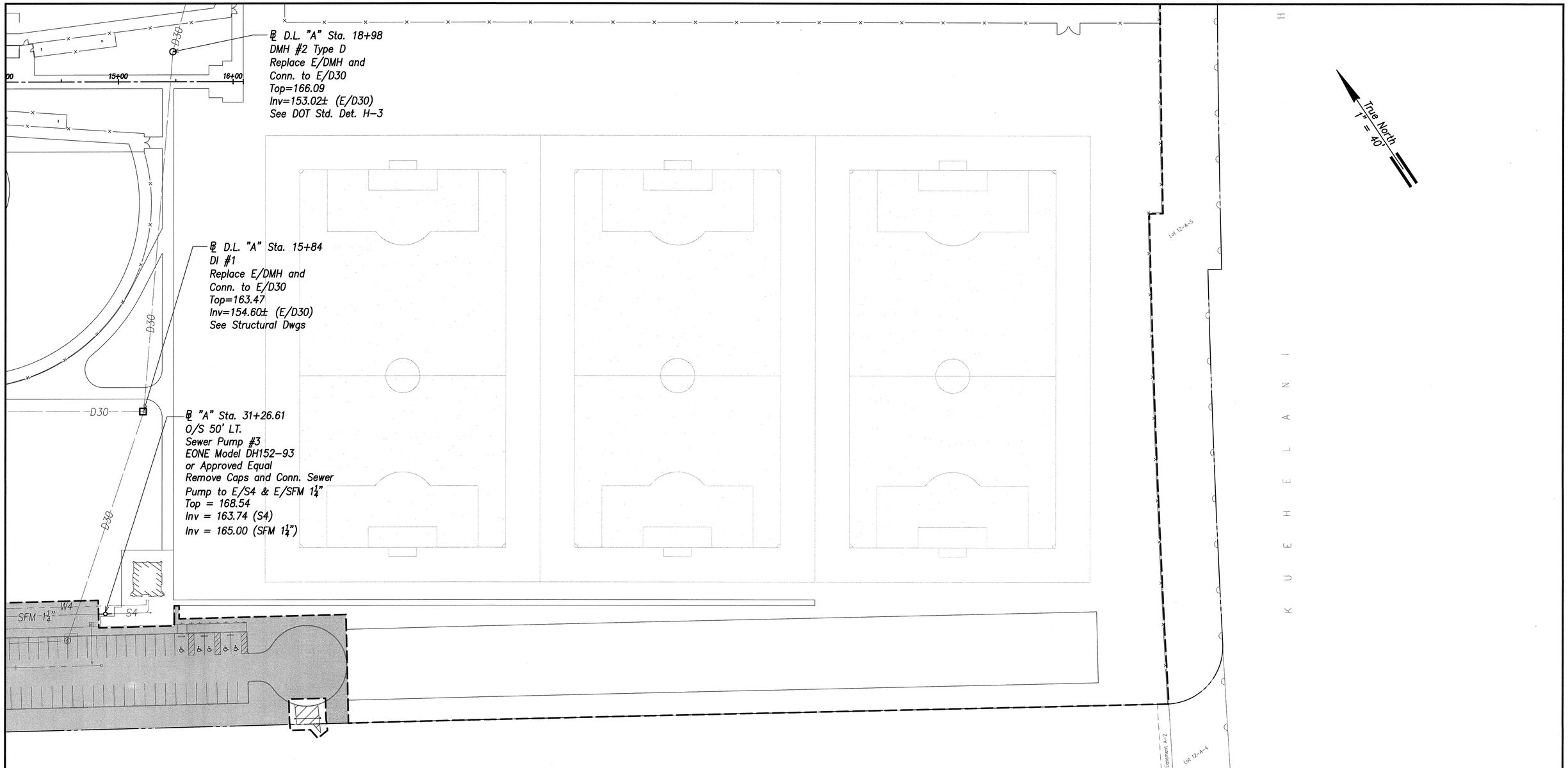

Legend

- Property Line
- Exist. Easement
- Project Limit
- N.I.C. (Ph. 1 & Ph. 2)

Utility Plan – 5

Scale: 1" = 40'

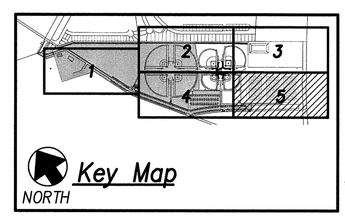

Graphic Scale:

1" = 40' 40' 20' 0' 40' 80'

Scale In Feet

REVISION NO.	SYM.	DESCRIPTION	SHT./OF	DATE	APPROVED

GORDON T. RING
LICENSED PROFESSIONAL ENGINEER
No. 9300-C
HAWAII, U.S.A.

THIS WORK WAS PREPARED BY ME OR UNDER MY SUPERVISION AND CONSTRUCTION OF THIS PROJECT WILL BE UNDER MY OBSERVATION.

SIGNATURE 4/30/16 EXP. DATE

R. M. TOWILL CORPORATION
Planning • Engineering • Environmental Services • Photogrammetry • Surveying • Construction Management
808 842 1133 2024 North King Street Suite 200 Honolulu, Hawaii 96819-2245

STATE OF HAWAII
DEPARTMENT OF LAND AND NATURAL RESOURCES
ENGINEERING DIVISION

CENTRAL MAUI REGIONAL SPORTS COMPLEX
PHASE 3
WAILUKU, MAUI, HAWAII

UTILITY PLAN – 5

DESIGNED: GR/NN/JP	SUBMITTED: --
DRAWN: GR/NN/JP	DATE: DECEMBER 2015
CHECKED: GTR	SCALE: AS SHOWN
APPROVED: CHIEF ENGINEER	DEC 2 2 2015 DATE

DRAWING NO. C-26

JOB NO. F93C817D SHEET NO.15 OF 90 SHEETS

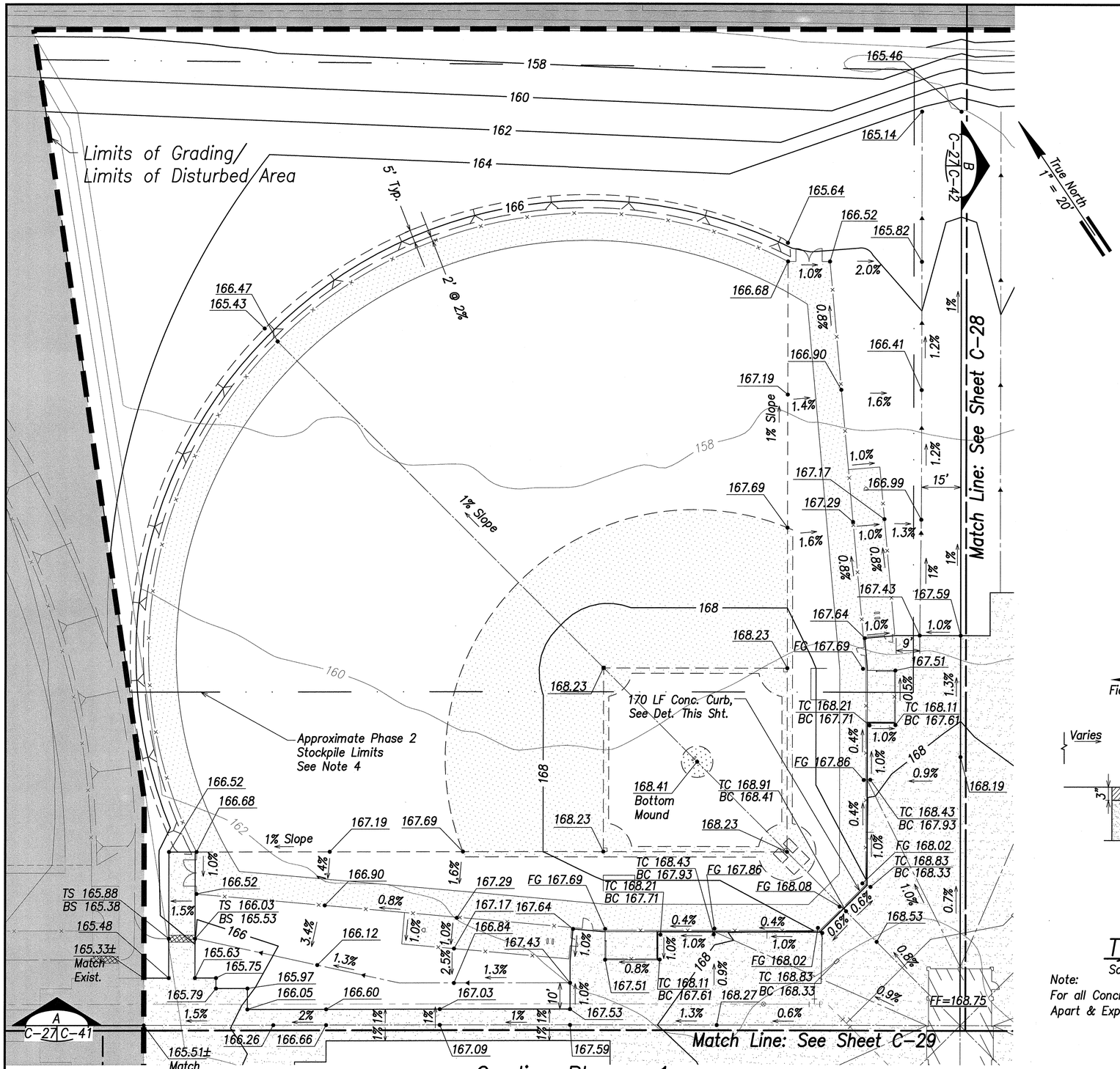

Grading Plan – 1

Scale: 1" = 20'

Legend

Property Line	Exist. Contour
Exist. Easement	Finished Contour
Grading Limit	Top Bank
N.I.C. (Ph. 1 & Ph. 2)	Bottom Bank
Concrete Walkway	Slope
D18 Drain Line & Size	FF=166 Finish Floor Elevation
D18 Existing Drain Line & Size	165.36 Finish Spot Elevation
× 157.5 Existing Spot Elevation and Location	TC 165.36 / BC 164.86 Top Curb/ Bottom Curb Elevation
	TS 165.36 / BS 164.86 Top Sidewalk/ Bottom Sidewalk Elevation
	FG 164.53 Field Grade Elevation
	6" Conc. Curb

Earthwork Summary

(For Permit Purposes Only)

	Area to be Graded (Acres)	Area to be Disturbed (Acres)	Excavation (cy.)	Embankment (cy.)	Approx. Stockpile From Ph. 2	Net Excavation (cy.)
Base Bid (Incl. Youth Fields, Soccer Fields, Retention Basin and Overflow Parking	27.4	27.4	74,000	77,000	3,000	0

Notes:

1. Quantities shown for permitting purposes only. Contractor is responsible for verifying quantities.
2. Earthwork quantities are calculated to the finished subgrades shown on the plans and includes 1 foot of soil losses due to clearing and grubbing. Quantities do not include overexcavation of unsuitable material and/or losses due to shrinkage.
3. Finish grades for areas to be hydroseeded include topsoil layer.
4. The Phase 2 stockpile area shown on this sheet is currently under construction. When complete, the stockpile is anticipated to contain approximately 3,000 CY of material. Actual material quantity will vary. The contractor shall be responsible for balancing the earthwork quantities onsite by adjusting the depth of the retention basin. The Contractor shall account for any potential stockpile discrepancies in their bid. No additional change orders will be issued due to variations associated with the Phase 2 stockpile.

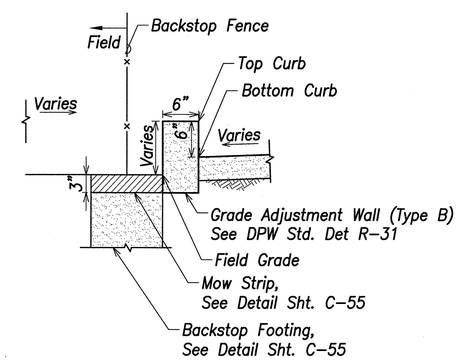

Typ. Curb Section

Scale: 1" = 1'

Note:
For all Concrete Curbs, Provide Contraction Joints at 5' Apart & Expansion Joints at 50' Apart.

Graphic Scale:
1" = 20' 20' 10' 0' 20' 40'
Scales In Feet

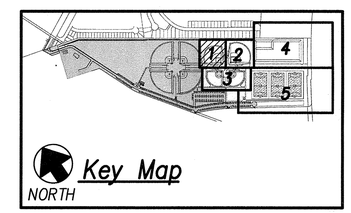

REVISION NO.	SYM.	DESCRIPTION	SHT./OF	DATE	APPROVED

GORDON T. RING LICENSED PROFESSIONAL ENGINEER No. 9300-C HAWAII, U.S.A.

THIS WORK WAS PREPARED BY ME OR UNDER MY SUPERVISION AND CONSTRUCTION OF THIS PROJECT WILL BE UNDER MY OBSERVATION.

SIGNATURE 4/30/16 EXP. DATE

R. M. TOWILL CORPORATION
Planning • Engineering • Environmental Services • Photogrammetry • Surveying • Construction Management
808 842 1133 2024 North King Street Suite 200 Honolulu Hawaii 96819-3464

STATE OF HAWAII
DEPARTMENT OF LAND AND NATURAL RESOURCES
ENGINEERING DIVISION

CENTRAL MAUI REGIONAL SPORTS COMPLEX
PHASE 3
WAILUKU, MAUI, HAWAII

GRADING PLAN – 1

DESIGNED:	GR/NN/JP	SUBMITTED:	--
DRAWN:	GR/NN/JP	DATE:	DECEMBER 2015
CHECKED:	GTR	SCALE:	AS SHOWN
APPROVED: CHIEF ENGINEER	DEC 2 2 2015 DATE	DRAWING NO.	C-27

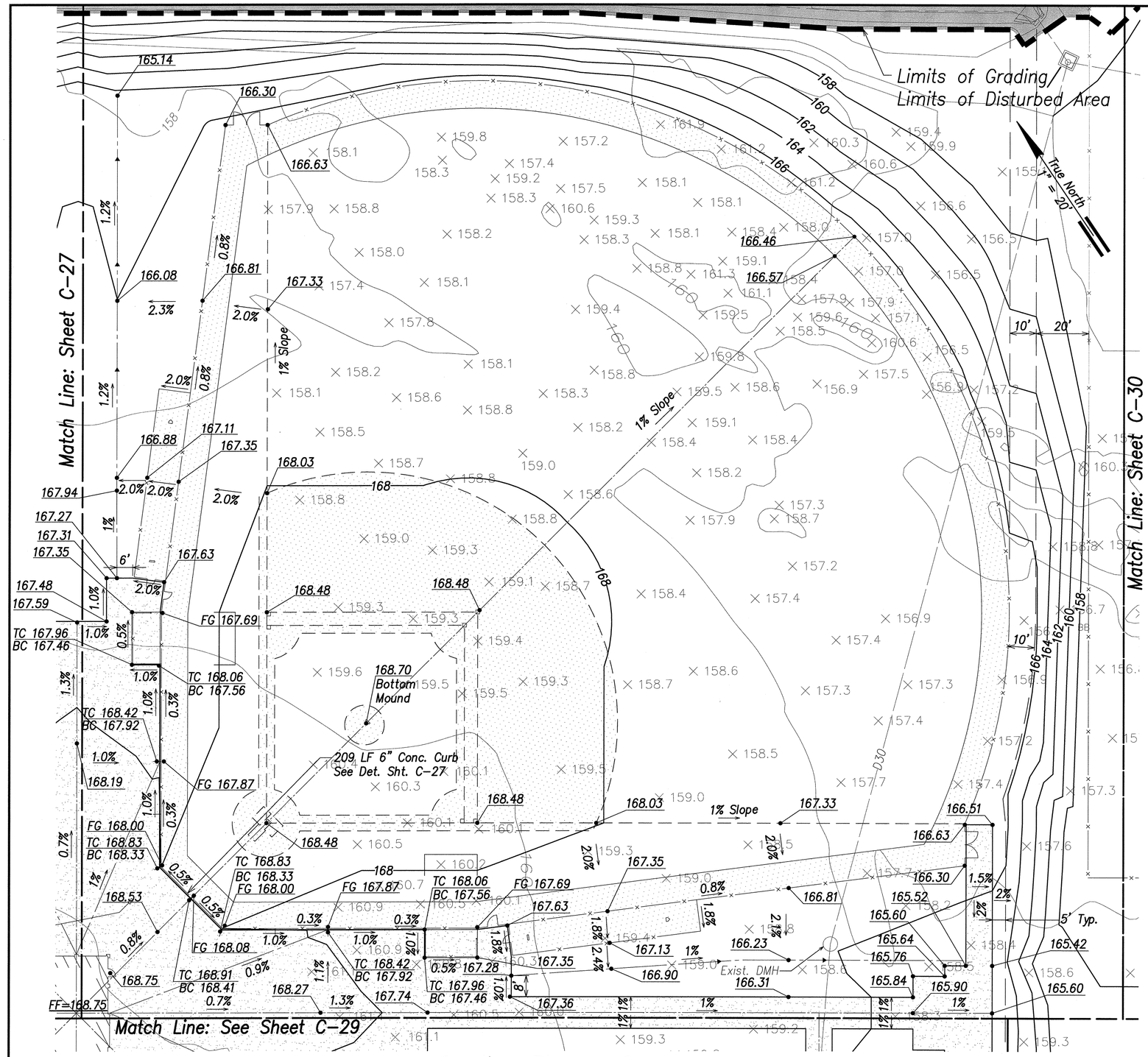

Grading Plan – 2

Scale: 1" = 20'

Legend

Property Line	Exist. Contour
Exist. Easement	Finished Contour
Grading Limit	Top Bank
N.I.C. (Ph. 1 & Ph. 2)	Bottom Bank
Concrete Walkway	Slope
D18 Drain Line & Size	FF=166 Finish Floor Elevation
D18 Existing Drain Line & Size	165.36 Finish Spot Elevation
× 157.5 Existing Spot Elevation and Location	TC 165.36 BC 164.86 Top Curb/ Bottom Curb Elevation
	FG 164.53 Field Grade Elevation
	6" Conc. Curb

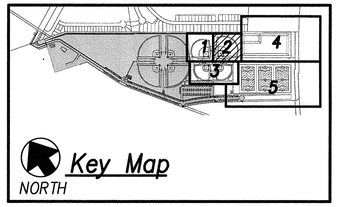

Key Map

NORTH

Graphic Scale:

1" = 20' 20' 10' 0' 20' 40'

Scales In Feet

REVISION NO.	SYM.	DESCRIPTION	SHT./OF	DATE	APPROVED

GORDON T. RING
LICENSED PROFESSIONAL ENGINEER
No. 9300-C
HAWAII, U.S.A.

THIS WORK WAS PREPARED BY ME OR UNDER MY SUPERVISION AND CONSTRUCTION OF THIS PROJECT WILL BE UNDER MY OBSERVATION.

SIGNATURE 4/30/16 EXP. DATE

R. M. TOWILL CORPORATION

STATE OF HAWAII
DEPARTMENT OF LAND AND NATURAL RESOURCES
ENGINEERING DIVISION

CENTRAL MAUI REGIONAL SPORTS COMPLEX
PHASE 3
WAILUKU, MAUI, HAWAII

GRADING PLAN – 2

DESIGNED: GR/NN/JP	SUBMITTED: --
DRAWN: GR/NN/JP	DATE: DECEMBER 2015
CHECKED: GTR	SCALE: AS SHOWN
APPROVED: CHIEF ENGINEER	DEC 2 2 2015 DATE
	DRAWING NO. C-28

JOB NO. F93C817D

SHEET NO.17 OF 90 SHEETS

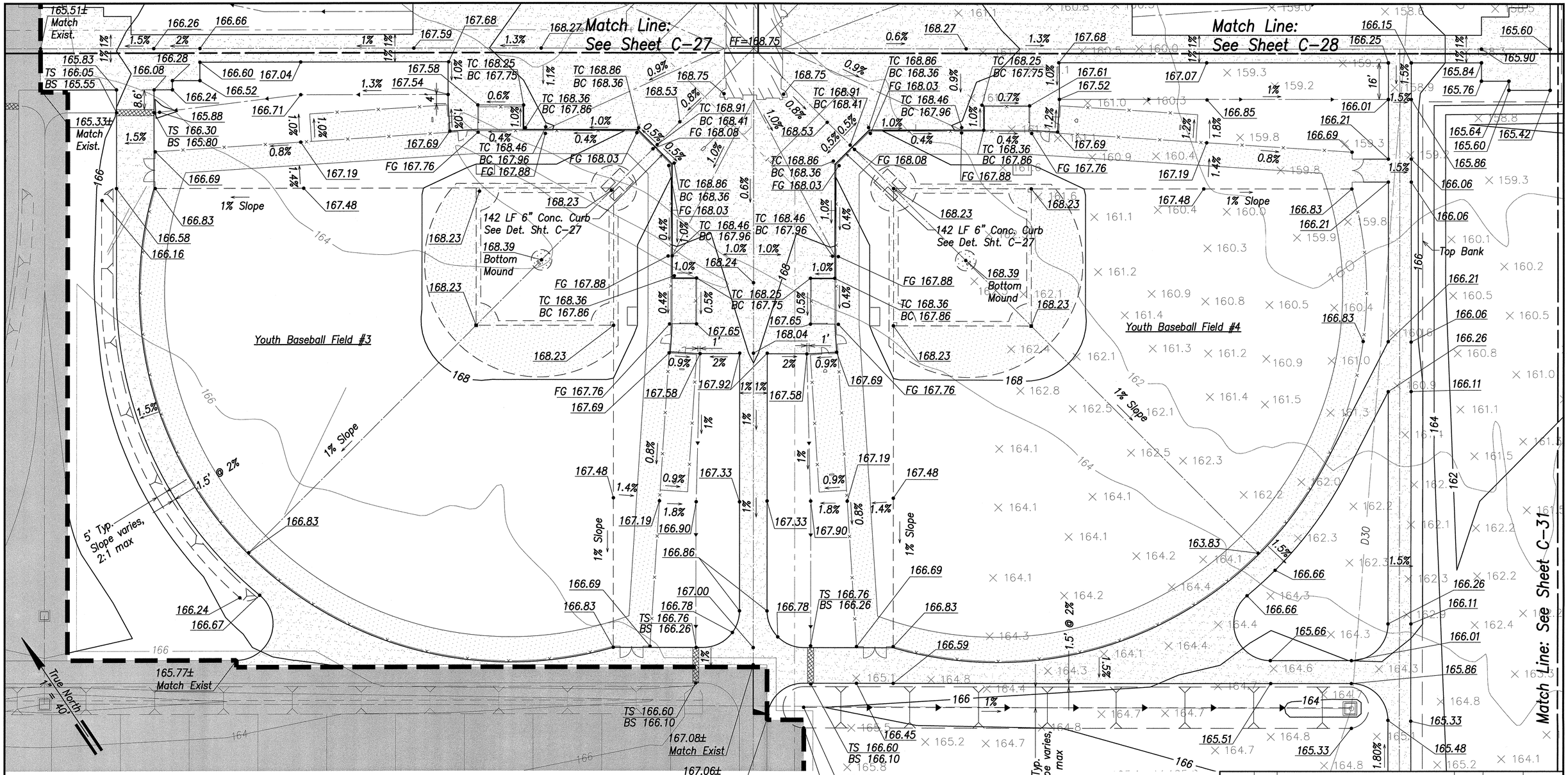

Legend

Property Line	
Exist. Easement	
Grading Limit	
N.I.C. (Ph. 1 & Ph. 2)	
Concrete Walkway	
D18	Drain Line & Size
D18	Existing Drain Line & Size
× 157.5	Existing Spot Elevation and Location
180	Exist. Contour
180	Finished Contour
	Top Bank
	Bottom Bank
Y Y Y	Slope
FF=166	Finish Floor Elevation
165.36	Finish Spot Elevation
	6" Conc. Curb
TC 165.36 / BC 164.86	Top Curb/ Bottom Curb Elevation
FG 164.53	Field Grade Elevation
TS 165.36 / BS 164.86	Top Sidewalk/ Bottom Sidewalk Elevation

Grading Plan – 3

Scale: 1" = 20'

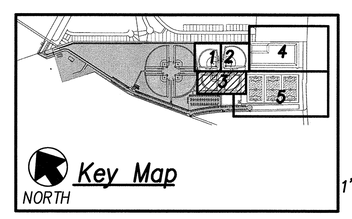

1" = 20'

Graphic Scale: 20' 10' 0' 20' 40'

Scales In Feet

REVISION NO.	SYM.	DESCRIPTION	SHT./OF	DATE	APPROVED

GORDON T. RING LICENSED PROFESSIONAL ENGINEER No. 9300-C HAWAII, U.S.A.

THIS WORK WAS PREPARED BY ME OR UNDER MY SUPERVISION AND CONSTRUCTION OF THIS PROJECT WILL BE UNDER MY OBSERVATION.

SIGNATURE 4/30/16 EXP. DATE

R. M. TOWILL CORPORATION
Planning • Engineering • Environmental Services • Photogrammetry • Surveying • Construction Management
808 842 1133 2024 North King Street Suite 200 Honolulu, Hawaii 96819-3404

STATE OF HAWAII
DEPARTMENT OF LAND AND NATURAL RESOURCES
ENGINEERING DIVISION

CENTRAL MAUI REGIONAL SPORTS COMPLEX
PHASE 3
WAILUKU, MAUI, HAWAII

GRADING PLAN – 3

DESIGNED:	GR/NN/JP	SUBMITTED:	--
DRAWN:	GR/NN/JP	DATE:	DECEMBER 2015
CHECKED:	GTR	SCALE:	AS SHOWN

APPROVED: CHIEF ENGINEER — DEC 2 2 2015 DATE

DRAWING NO. C-29

JOB NO. F93C817D

SHEET NO.18 OF 90 SHEETS

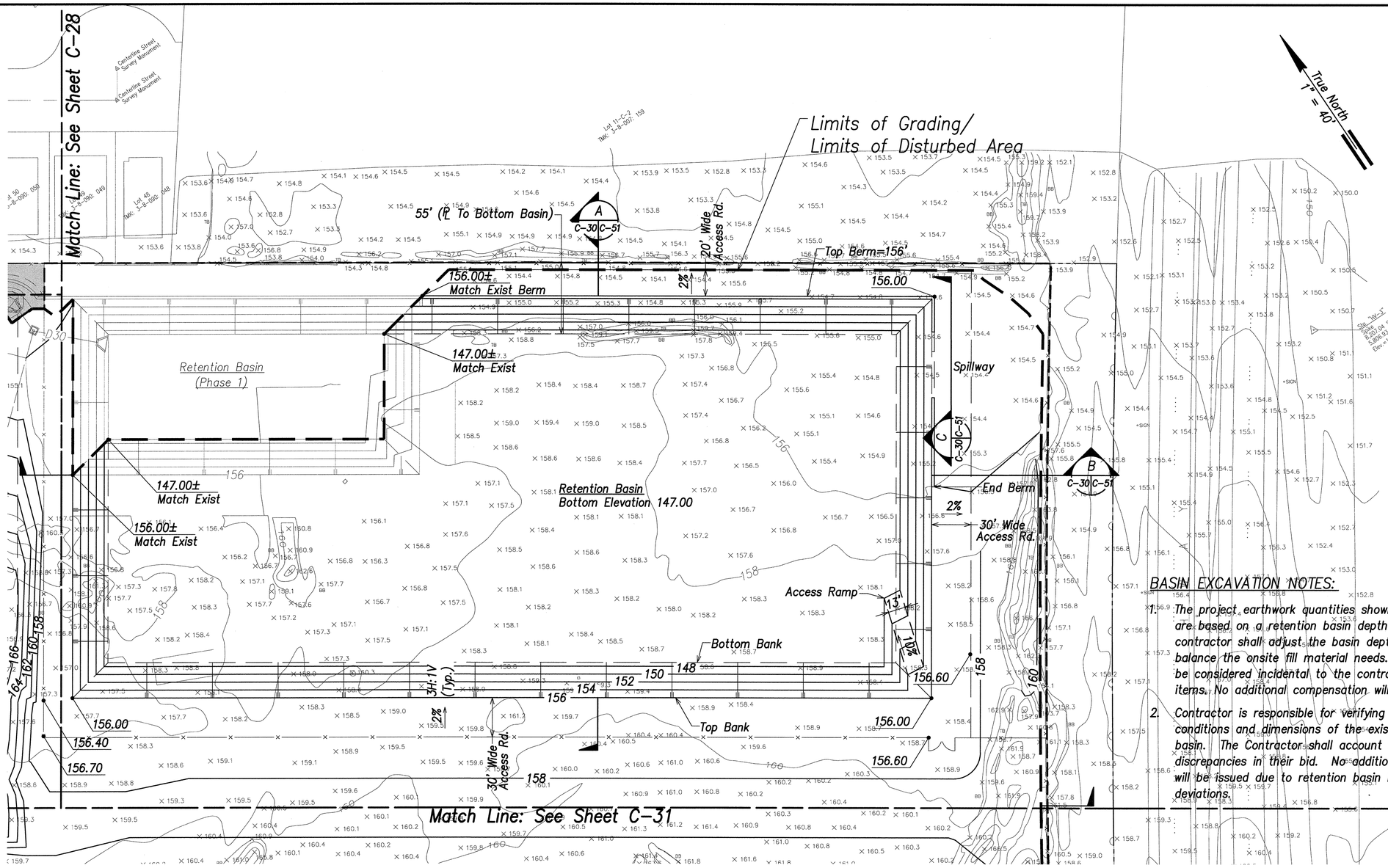

BASIN EXCAVATION NOTES:

1. The project earthwork quantities shown on sheet C-27 are based on a retention basin depth of 9 feet. The contractor shall adjust the basin depth as required to balance the onsite fill material needs. This effort shall be considered incidental to the contract earthwork pay items. No additional compensation will be allowed.
2. Contractor is responsible for verifying the actual conditions and dimensions of the existing retention basin. The Contractor shall account for any potential discrepancies in their bid. No additional change orders will be issued due to retention basin location and deviations.

Legend

Property Line	Exist. Contour (180)
Exist. Easement	Finished Contour (180)
Grading Limit	Top Bank
N.I.C. (Ph. 1 & Ph. 2)	Bottom Bank
Concrete Walkway	Slope
Drain Line & Size (D18)	Finish Floor Elevation (FF=166)
Existing Drain Line & Size (D18)	Finish Spot Elevation (165.36)
Existing Spot Elevation and Location (× 157.5)	

Grading Plan – 4

Scale: 1" = 40'

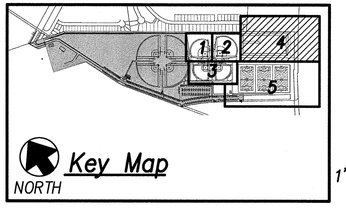

Graphic Scale:

1" = 40' 40' 20' 0' 40' 80'

Scales In Feet

REVISION NO.	SYM.	DESCRIPTION	SHT./OF	DATE	APPROVED

GORDON T. RING LICENSED PROFESSIONAL ENGINEER No. 9300-C HAWAII, U.S.A.

THIS WORK WAS PREPARED BY ME OR UNDER MY SUPERVISION AND CONSTRUCTION OF THIS PROJECT WILL BE UNDER MY OBSERVATION.

SIGNATURE 4/30/16 EXP. DATE

R. M. TOWILL CORPORATION
Planning • Engineering • Environmental Services • Photogrammetry • Surveying • Construction Management
808 842 1133 2024 North King Street Suite 200 Honolulu, Hawaii 96819-3484

STATE OF HAWAII
DEPARTMENT OF LAND AND NATURAL RESOURCES
ENGINEERING DIVISION

CENTRAL MAUI REGIONAL SPORTS COMPLEX
PHASE 3
WAILUKU, MAUI, HAWAII

GRADING PLAN – 4

DESIGNED: GR/NN/JP	SUBMITTED: --
DRAWN: GR/NN/JP	DATE: DECEMBER 2015
CHECKED: GTR	SCALE: AS SHOWN
APPROVED: CHIEF ENGINEER	DEC 2 2 2015 DATE
	DRAWING NO. C-30

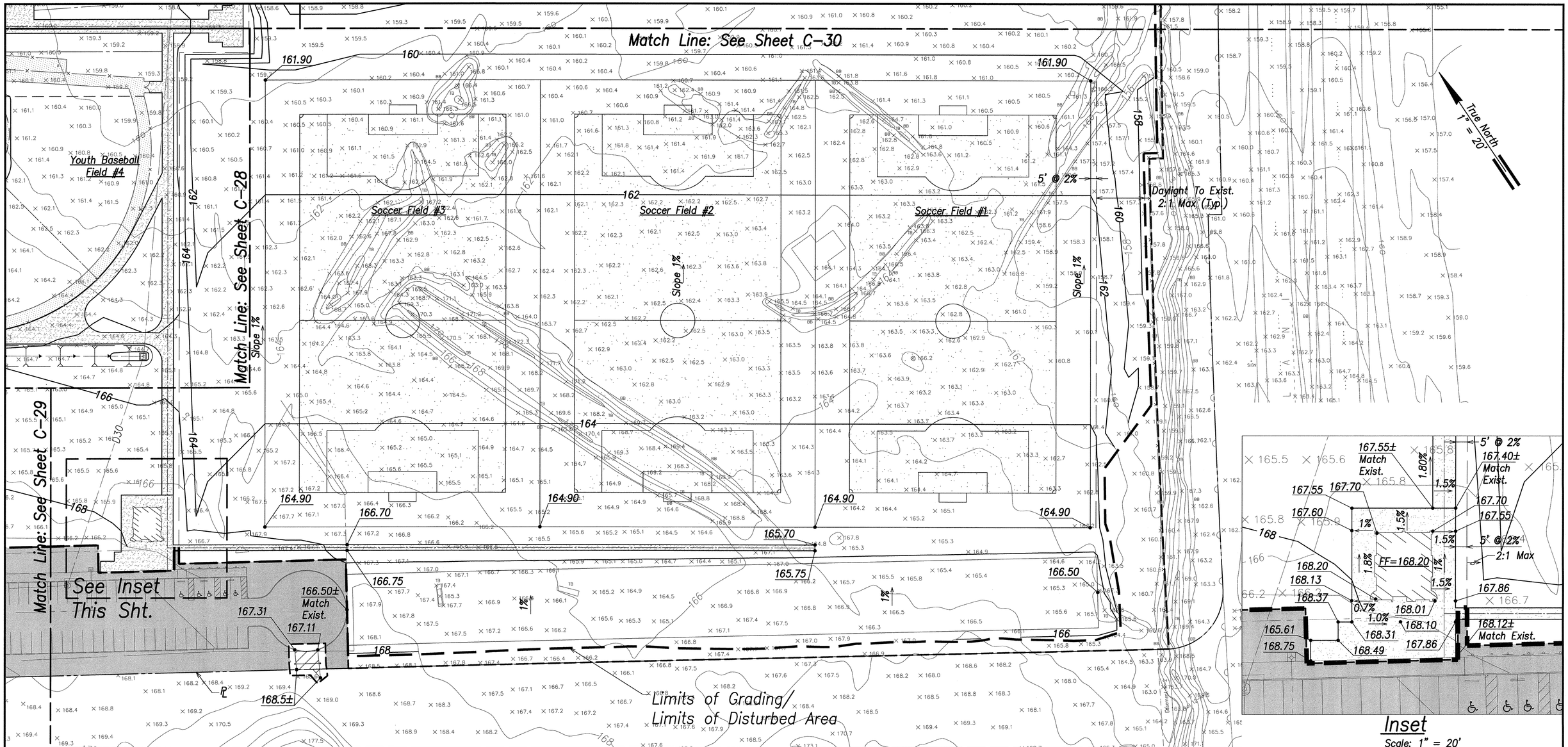

Inset
Scale: 1" = 20'

Legend

Property Line	Exist. Contour
Exist. Easement	Finished Contour
Grading Limit	Top Bank
N.I.C. (Ph. 1 & Ph. 2)	Bottom Bank
Concrete Walkway	Slope
D18 Drain Line & Size	FF=166 Finish Floor Elevation
D18 Existing Drain Line & Size	165.36 Finish Spot Elevation
× 157.5 Existing Spot Elevation and Location	

Grading Plan – 5
Scale: 1" = 40'

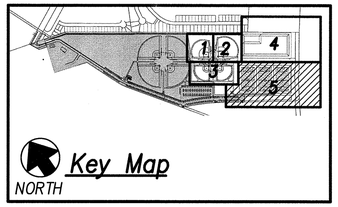

Key Map

1" = 40'

Graphic Scale:
40' 20' 0' 40' 80'
Scales In Feet

REVISION NO.	SYM.	DESCRIPTION	SHT./OF	DATE	APPROVED

GORDON T. RING
LICENSED PROFESSIONAL ENGINEER
No. 9300-C
HAWAII, U.S.A.

THIS WORK WAS PREPARED BY ME OR UNDER MY SUPERVISION AND CONSTRUCTION OF THIS PROJECT WILL BE UNDER MY OBSERVATION.

SIGNATURE 4/30/16 EXP. DATE

R. M. TOWILL CORPORATION
Planning • Engineering • Environmental Services • Photogrammetry • Surveying • Construction Management
808 842 1133 2024 North King Street Suite 200 Honolulu Hawaii 96819-3494

STATE OF HAWAII
DEPARTMENT OF LAND AND NATURAL RESOURCES
ENGINEERING DIVISION

CENTRAL MAUI REGIONAL SPORTS COMPLEX
PHASE 3
WAILUKU, MAUI, HAWAII

GRADING PLAN – 5

DESIGNED: GR/NN/JP	SUBMITTED:
DRAWN: GR/NN/JP	DATE: DECEMBER 2015
CHECKED: GTR	SCALE: AS SHOWN
APPROVED: CHIEF ENGINEER	DEC 2 2 2015 DATE
	DRAWING NO. C-31

JOB NO. F93C817D

SHEET NO.20 OF 90 SHEETS

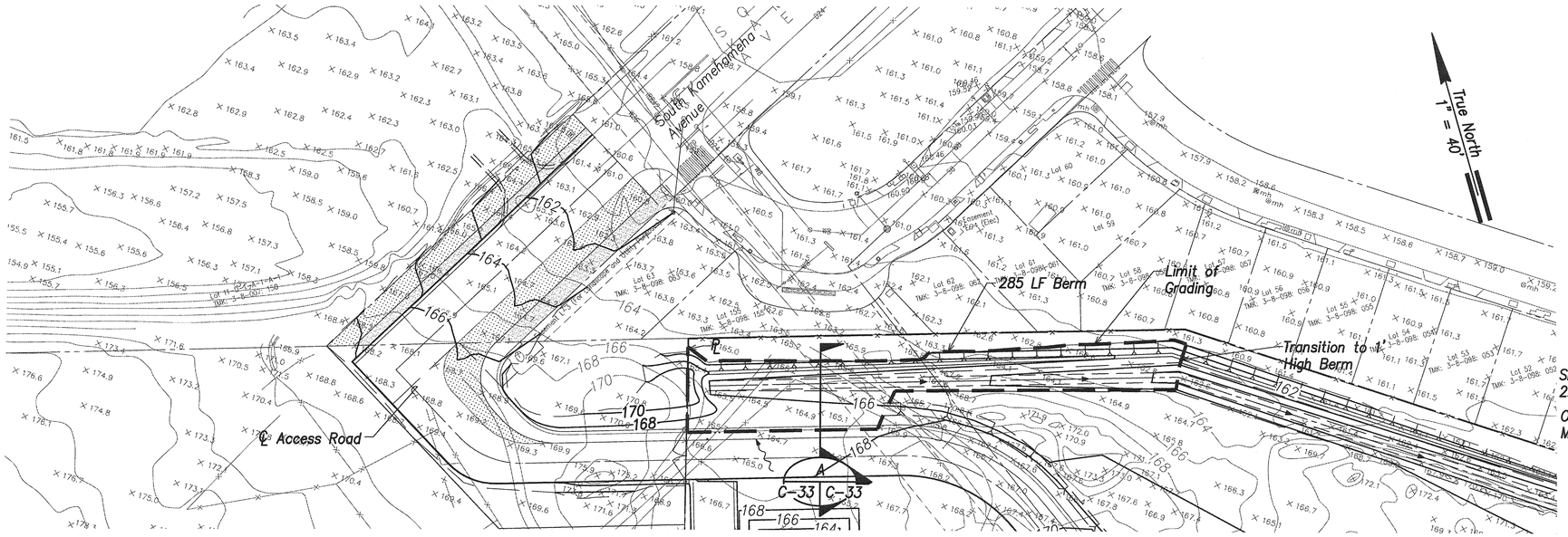

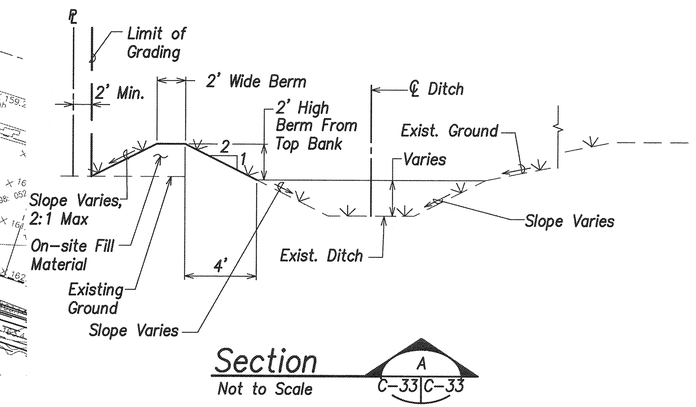

Grading Plan – 7

Scale: 1" = 40'

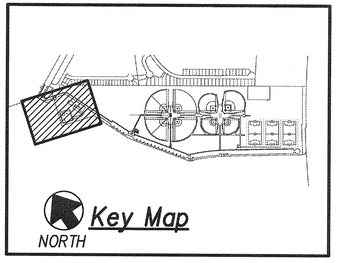

Legend

180	Exist. Contour
180	Finished Contour
	Limit of Grading
	Top Bank
	Bottom Bank
Y Y Y	Slope
FF=166	Finish Floor Elevation
166.00	Finish Spot Elevation

Graphic Scale:

1" = 40' 40' 20' 0' 40' 80'

Scale In Feet

REVISION NO.	SYM.	DESCRIPTION	SHT./OF	DATE	APPROVED

GORDON T. RING LICENSED PROFESSIONAL ENGINEER No. 9300-C HAWAII, U.S.A.

THIS WORK WAS PREPARED BY ME OR UNDER MY SUPERVISION AND CONSTRUCTION OF THIS PROJECT WILL BE UNDER MY OBSERVATION.

SIGNATURE 4/30/16 EXP. DATE

R. M. TOWILL CORPORATION
Planning • Engineering • Environmental Services • Photogrammetry • Surveying • Construction Management
808 842 1133 2024 North King Street Suite 200 Honolulu, Hawaii 96819-3404

STATE OF HAWAII
DEPARTMENT OF LAND AND NATURAL RESOURCES
ENGINEERING DIVISION

CENTRAL MAUI REGIONAL SPORTS COMPLEX
PHASE 3
WAILUKU, MAUI, HAWAII

GRADING PLAN – 7

DESIGNED: GR/NN/JP	SUBMITTED: --
DRAWN: GR/NN/JP	DATE: DECEMBER 2015
CHECKED: GTR	SCALE: AS SHOWN
APPROVED: CHIEF ENGINEER	DEC 2 2 2015 DATE
	DRAWING NO. C-33

JOB NO. F93C817D

SHEET NO. 21 OF 90 SHEETS

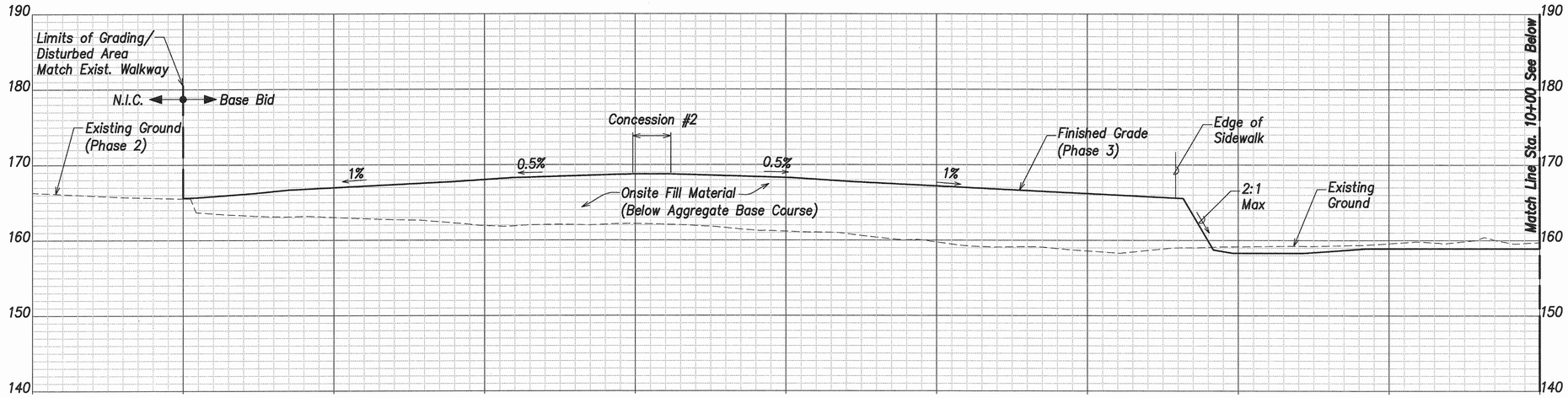

Note:
All Exposed Areas
Shall Be Grassed.
See Landscape Plans

Section A C-27 | C-41

Scales: Hor: 1" = 40'
Vert: 1" = 8'

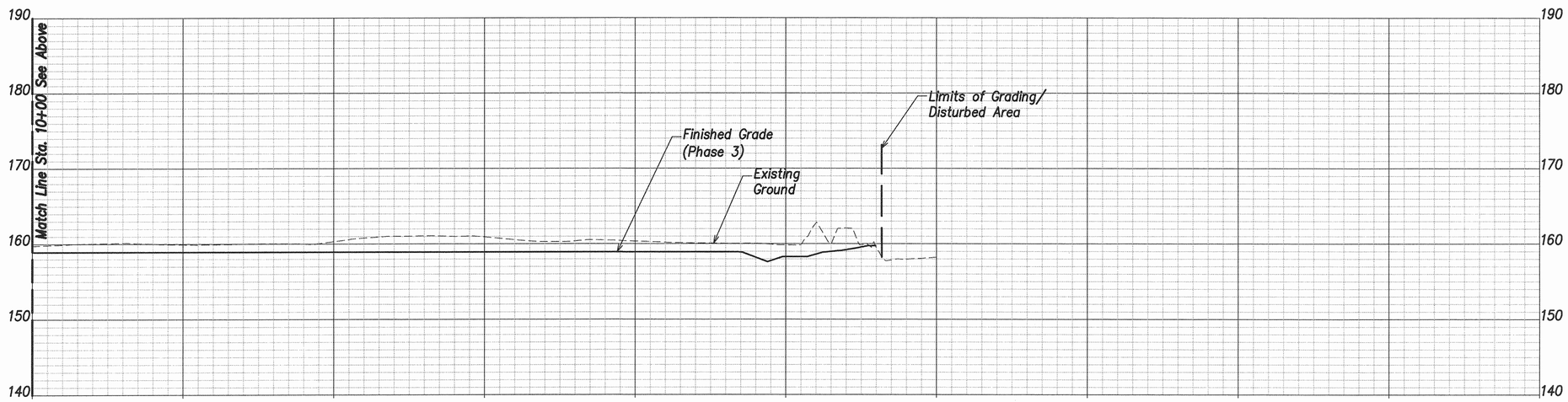

Note:
All Exposed Areas
Shall Be Grassed.
See Landscape Plans

Section A C-28 | C-41

Scales: Hor: 1" = 40'
Vert: 1" = 8'

Graphic Scales:

1" = 40' 40' 20' 0' 40' 80'

1" = 8' 8' 4' 0' 8' 16'

Scales In Feet

REVISION NO.	SYM.	DESCRIPTION	SHT./OF	DATE	APPROVED

GORDON T. RING
LICENSED PROFESSIONAL ENGINEER
No. 9300-C
HAWAII, U.S.A.

THIS WORK WAS PREPARED BY ME OR UNDER MY SUPERVISION AND CONSTRUCTION OF THIS PROJECT WILL BE UNDER MY OBSERVATION.

SIGNATURE 4/30/16 EXP. DATE

R. M. TOWILL CORPORATION
Planning • Engineering • Environmental Services • Photogrammetry • Surveying • Construction Management
808 842 1133 2024 North King Street Suite 200 Honolulu, Hawaii 96819-3494

STATE OF HAWAII
DEPARTMENT OF LAND AND NATURAL RESOURCES
ENGINEERING DIVISION

CENTRAL MAUI REGIONAL SPORTS COMPLEX
PHASE 3
WAILUKU, MAUI, HAWAII

SITE SECTIONS – 1

DESIGNED: GR/NN/JP	SUBMITTED: --
DRAWN: GR/NN/JP	DATE: DECEMBER 2015
CHECKED: GTR	SCALE: AS SHOWN
APPROVED: CHIEF ENGINEER	DEC 2 2 2015 DATE
	DRAWING NO. C-41

JOB NO. F93C817D

SHEET NO. 22 OF 90 SHEETS

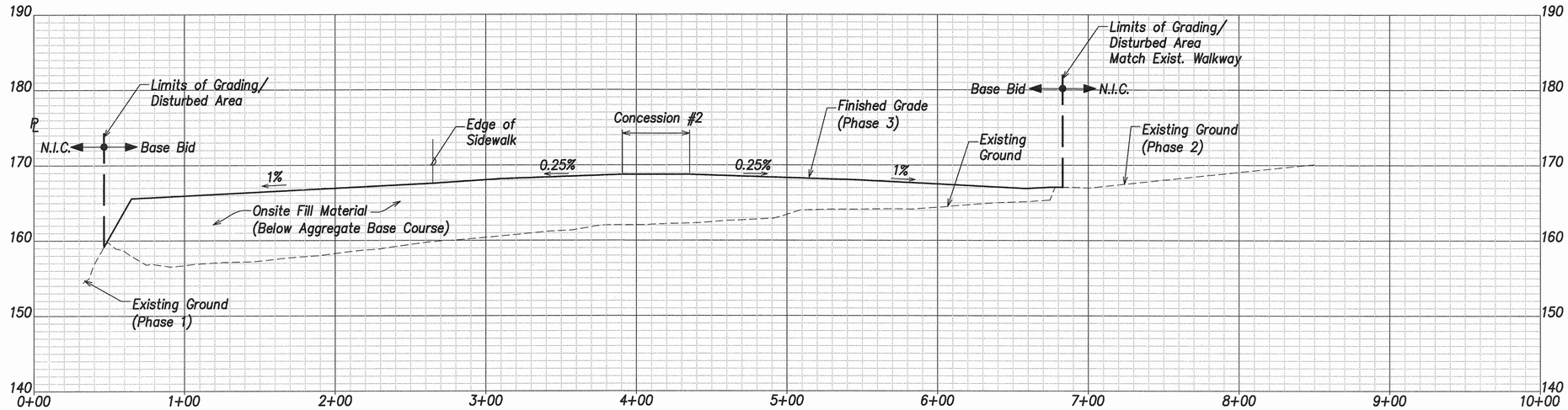

Note:
All Exposed Areas
Shall Be Grassed.
See Landscape Plans

Section B C-27 | C-42

Scales: Hor: 1" = 40'
Vert: 1" = 8'

Graphic Scales:

1" = 40' 40' 20' 0' 40' 80'

1" = 8' 8' 4' 0' 8' 16'

Scales In Feet

REVISION NO.	SYM.	DESCRIPTION	SHT./OF	DATE	APPROVED

GORDON T. RING
LICENSED PROFESSIONAL ENGINEER
No. 9300-C
HAWAII, U.S.A.

THIS WORK WAS PREPARED BY ME OR UNDER MY SUPERVISION AND CONSTRUCTION OF THIS PROJECT WILL BE UNDER MY OBSERVATION.

SIGNATURE 4/30/16 EXP. DATE

R. M. TOWILL CORPORATION
Planning • Engineering • Environmental Services • Photogrammetry • Surveying • Construction Management
808 842 1133 2024 North King Street Suite 200 Honolulu Hawaii 96819-2494

STATE OF HAWAII
DEPARTMENT OF LAND AND NATURAL RESOURCES
ENGINEERING DIVISION

CENTRAL MAUI REGIONAL SPORTS COMPLEX
PHASE 3
WAILUKU, MAUI, HAWAII

SITE SECTIONS – 2

DESIGNED:	GR/NN/JP	SUBMITTED:	--
DRAWN:	GR/NN/JP	DATE:	DECEMBER 2015
CHECKED:	GTR	SCALE:	AS SHOWN

APPROVED: CHIEF ENGINEER — DEC 2 2 2015 DATE

DRAWING NO. **C-42**

JOB NO. F93C817D

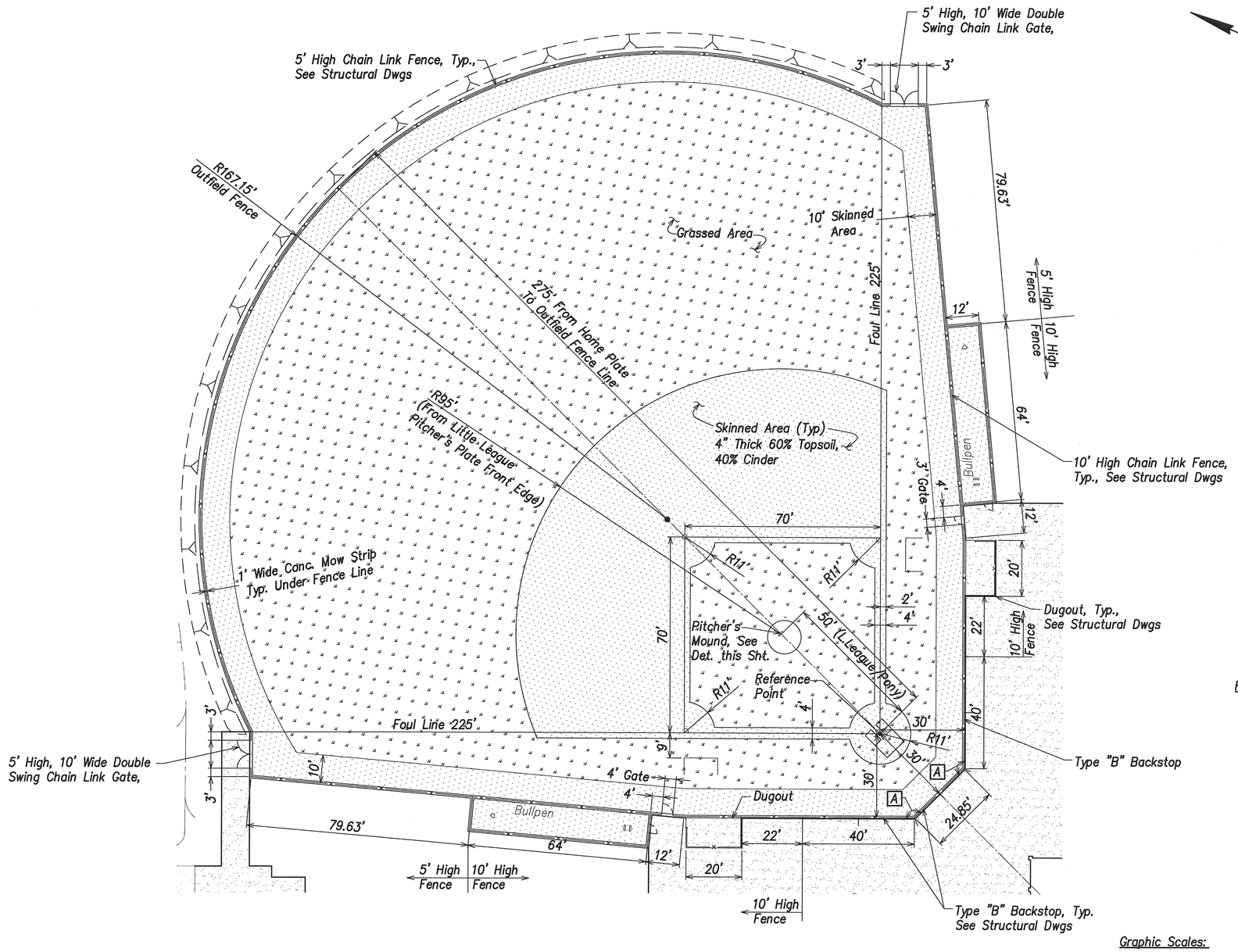

Youth Baseball Field Layout – Field 1

Scale: 1" = 20'

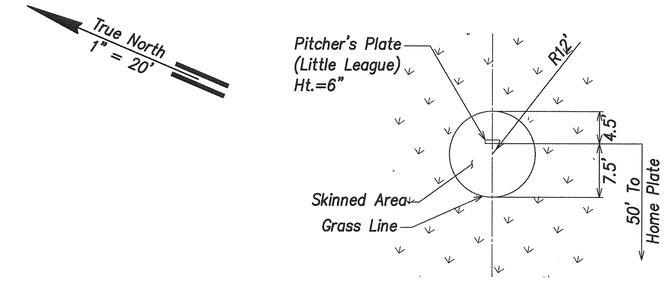

1 / C-48 **Pitcher's Mound**

Scale: 1" = 10'

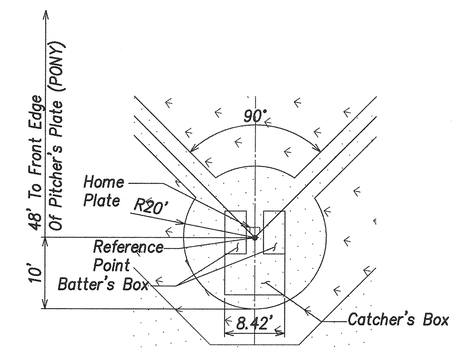

2 / C-48 **Home Plate & Batter's Box**

Scale: 1" = 10'

Field Dimensions

A

△ = 135°00'00"

Note:

Reinforced Heavy Packing Clay Shall Be Used At The High Stress Areas Fronting The Pitcher's Plate, The Landing Area Of The Lead And Follow Through Foot, And In The Batter's Box To Avoid Excessive Holes Or Wear Areas

Graphic Scales:

1" = 10' 10' 5' 0' 10' 20'

1" = 20' 20' 10' 0' 20' 40'

Scales In Feet

REVISION NO.	SYM.	DESCRIPTION	SHT./OF	DATE	APPROVED

GORDON T. RING LICENSED PROFESSIONAL ENGINEER No. 9300-C HAWAII, U.S.A.

THIS WORK WAS PREPARED BY ME OR UNDER MY SUPERVISION AND CONSTRUCTION OF THIS PROJECT WILL BE UNDER MY OBSERVATION.

SIGNATURE 4/30/16 EXP. DATE

R. M. TOWILL CORPORATION
Planning • Engineering • Environmental Services • Photogrammetry • Surveying • Construction Management
808 842 1133 2024 North King Street Suite 200 Honolulu, Hawaii 96819-2004

STATE OF HAWAII
DEPARTMENT OF LAND AND NATURAL RESOURCES
ENGINEERING DIVISION

CENTRAL MAUI REGIONAL SPORTS COMPLEX
PHASE 3
WAILUKU, MAUI, HAWAII

YOUTH BASEBALL FIELD – FIELD 1

DESIGNED: GR/NN/JP		SUBMITTED: --	
DRAWN: GR/NN/JP		DATE: DECEMBER 2015	
CHECKED: GTR		SCALE: AS SHOWN	
APPROVED: CHIEF ENGINEER	DEC 2 2 2015 DATE		DRAWING NO. C-48

JOB NO. F93C817D

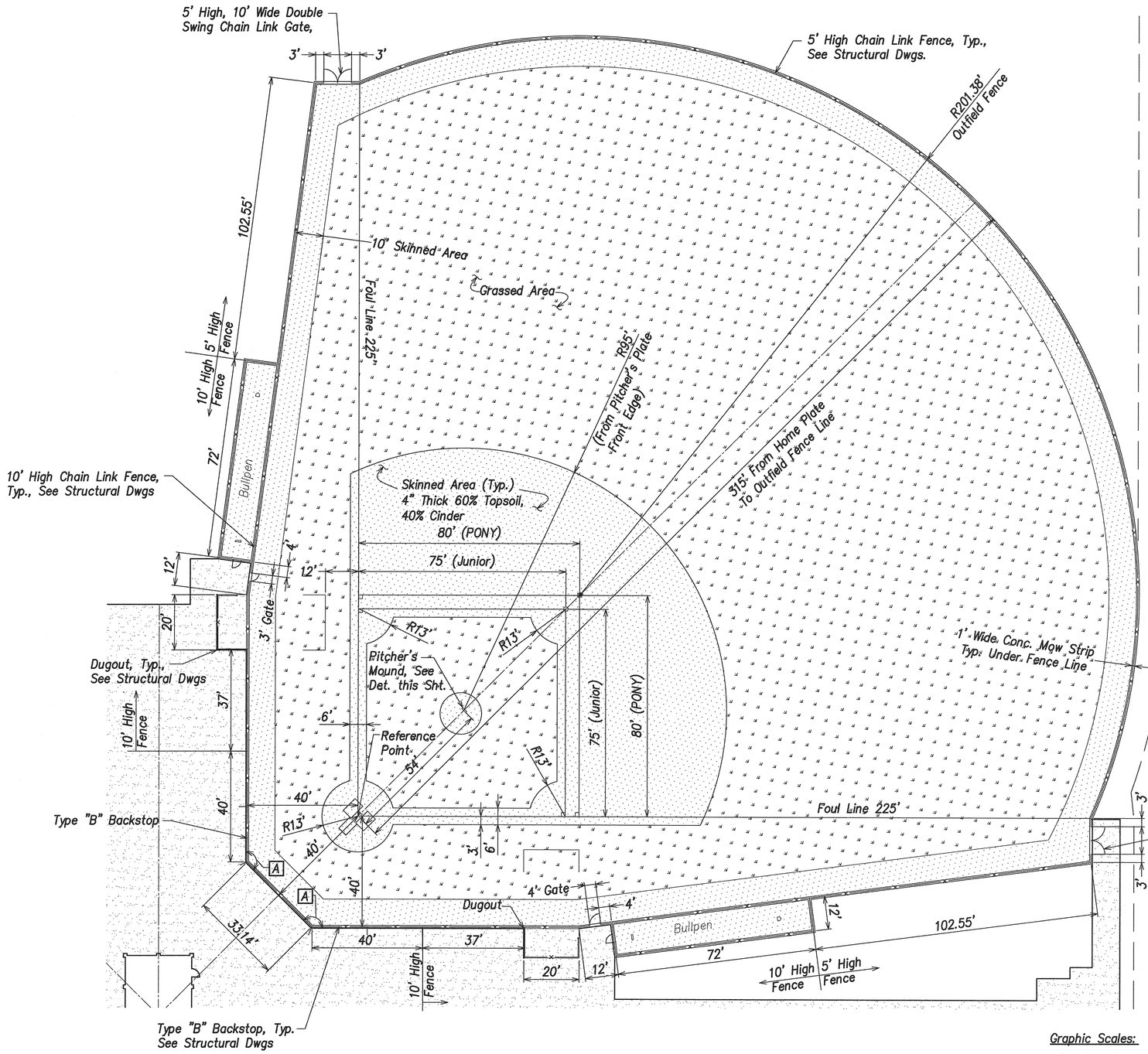

Youth Baseball Field Layout – Field 2

Scale: 1" = 20'

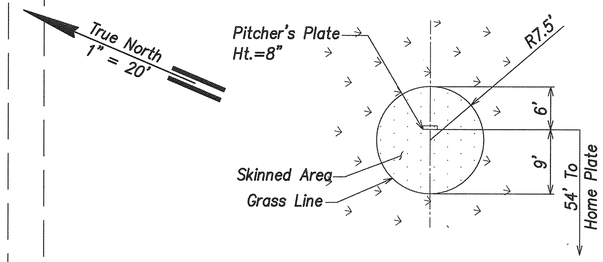

1 C-49 **Pitcher's Mound**

Scale: 1" = 10'

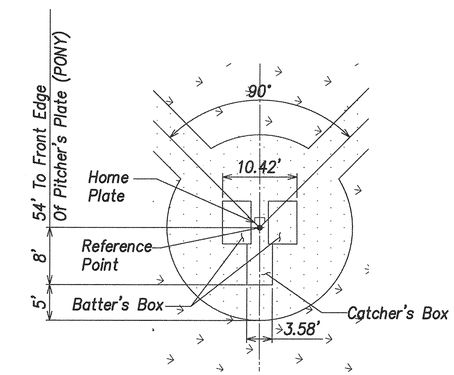

2 C-49 **Home Plate & Batter's Box**

Scale: 1" = 10'

Note:
Reinforced Heavy Packing Clay Shall Be Used At The High Stress Areas Fronting The Pitcher's Plate, The Landing Area Of The Lead And Follow Through Foot, And In The Batter's Box To Avoid Excessive Holes Or Wear Areas

Field Dimensions

A

△ = 135°00'00"

Graphic Scales:

1" = 10' 10' 5' 0' 10' 20'

1" = 20' 20' 10' 0' 20' 40'

Scales In Feet

REVISION NO.	SYM.	DESCRIPTION	SHT./OF	DATE	APPROVED

GORDON T. RING LICENSED PROFESSIONAL ENGINEER No. 9300-C HAWAII, U.S.A.

THIS WORK WAS PREPARED BY ME OR UNDER MY SUPERVISION AND CONSTRUCTION OF THIS PROJECT WILL BE UNDER MY OBSERVATION.

SIGNATURE 4/30/16 EXP. DATE

R. M. TOWILL CORPORATION
Civil Engineers • Surveyors • Planners • Arch. • Landscape Arch.
808 842 1133 2024 North King Street Suite 200 Honolulu, Hawaii 96819-2484

STATE OF HAWAII
DEPARTMENT OF LAND AND NATURAL RESOURCES
ENGINEERING DIVISION

CENTRAL MAUI REGIONAL SPORTS COMPLEX
PHASE 3
WAILUKU, MAUI, HAWAII

YOUTH BASEBALL FIELD – FIELD 2

DESIGNED:	GR/NN/JP	SUBMITTED:	--
DRAWN:	GR/NN/JP	DATE:	DECEMBER 2015
CHECKED:	GTR	SCALE:	AS SHOWN

APPROVED: CHIEF ENGINEER — DEC 2 2 2015 DATE

DRAWING NO. C-49

JOB NO. F93C817D

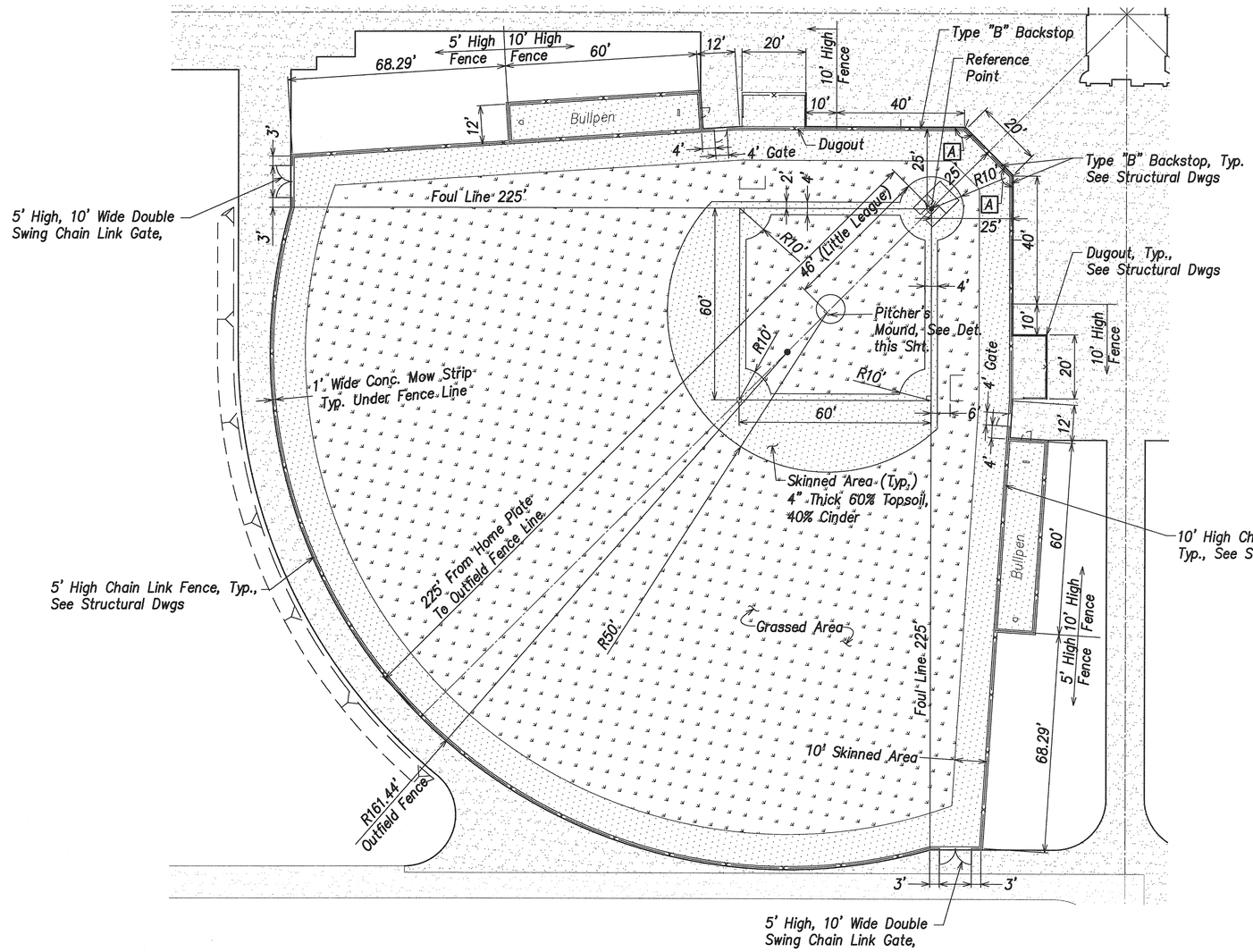

Youth Baseball Field Layout – Fields 3 & 4

Scale: 1" = 20'

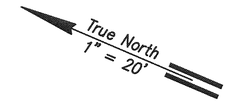

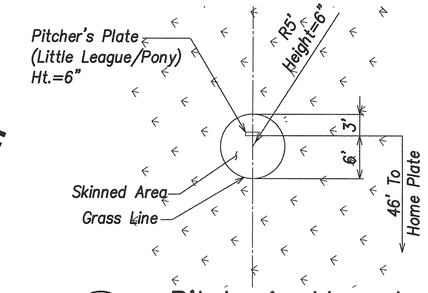

1 C-50 **Pitcher's Mound**

Scale: 1" = 10'

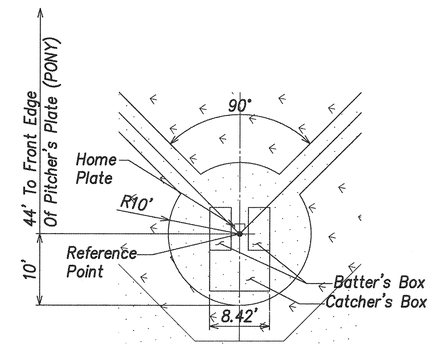

2 C-50 **Home Plate & Batter's Box**

Scale: 1" = 10'

Field Dimensions

A

△ =135°00'00"

Note:
Reinforced Heavy Packing Clay Shall Be Used At The High Stress Areas Fronting The Pitcher's Plate, The Landing Area Of The Lead And Follow Through Foot, And In The Batter's Box To Avoid Excessive Holes Or Wear Areas

Graphic Scales:

1" = 10' 10' 5' 0' 10' 20'

1" = 20' 20' 10' 0' 20' 40'

Scales In Feet

REVISION NO.	SYM.	DESCRIPTION	SHT./OF	DATE	APPROVED

GORDON T. RING
LICENSED PROFESSIONAL ENGINEER
No. 9300-C
HAWAII, U.S.A.

THIS WORK WAS PREPARED BY ME OR UNDER MY SUPERVISION AND CONSTRUCTION OF THIS PROJECT WILL BE UNDER MY OBSERVATION.

SIGNATURE 4/30/16 EXP. DATE

R. M. TOWILL CORPORATION
Rooting - Engineering - Environmental Services - Photogrammetry - Surveying - Construction Management
808 842 1133 2024 North King Street Suite 300 Honolulu, Hawaii 96819-3494

STATE OF HAWAII
DEPARTMENT OF LAND AND NATURAL RESOURCES
ENGINEERING DIVISION

CENTRAL MAUI REGIONAL SPORTS COMPLEX
PHASE 3
WAILUKU, MAUI, HAWAII

YOUTH BASEBALL FIELDS 3 & 4

DESIGNED: GR/NN/JP	SUBMITTED: --
DRAWN: GR/NN/JP	DATE: DECEMBER 2015
CHECKED: GTR	SCALE: AS SHOWN
APPROVED: CHIEF ENGINEER	DEC 2 2 2015 DATE
	DRAWING NO. C-50

JOB NO. F93C817D

SHEET NO.26 OF 90 SHEETS

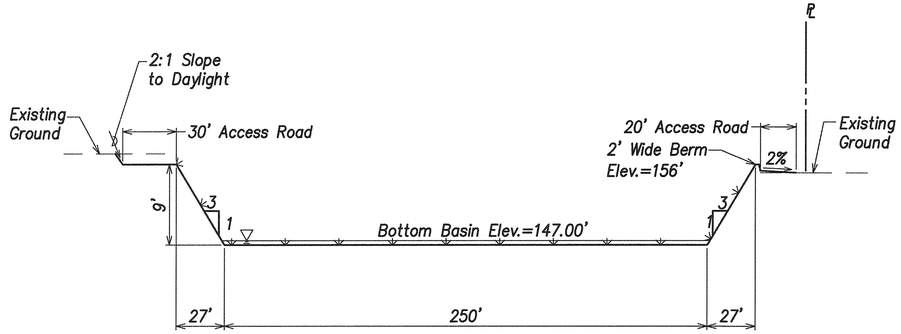

Section A C-30 | C-51
Scales: Hor: 1"=40'
Vert: 1"=8'

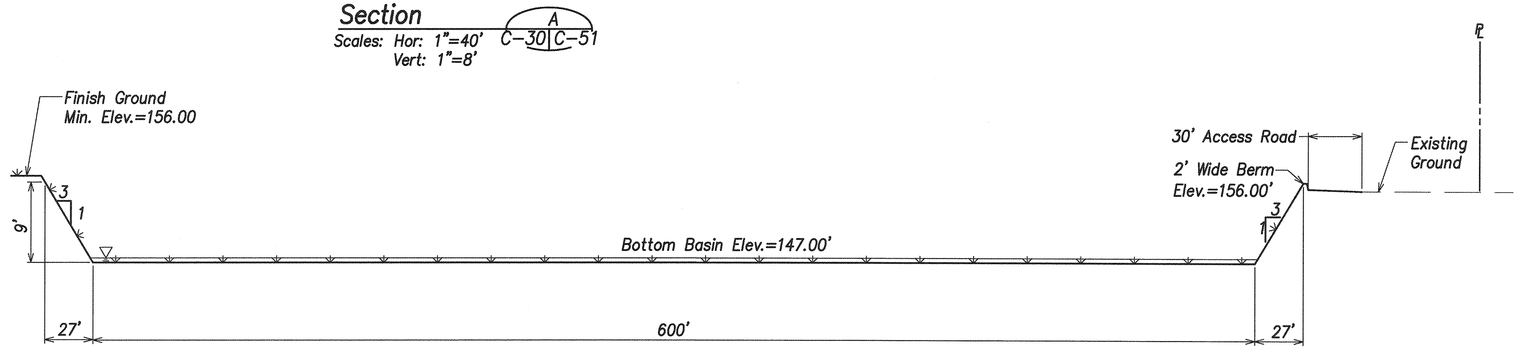

Section B C-30 | C-51
Scales: Hor: 1"=40'
Vert: 1"=8'

Retention Basin Section

Note:
All Exposed Areas
Shall Be Grassed

Distance from top of cut or bottom of fill to property line:	
Height of Cut or Fill	Distance from Property Line
0' to 2'	1'
more than 2' to 4'	2'
more than 4' to 6'	3'
more than 6' to 10'	4'
more than 10' to 15'	5'
more than 15'	8'

BASIN EXCAVATION NOTES:

1. The project earthwork quantities shown on sheet C-27 are based on a retention basin depth of 9 feet. The contractor shall adjust the basin depth as required to balance the onsite fill material needs. This effort shall be considered incidental to the contract earthwork pay items. No additional compensation will be allowed.
2. Contractor is responsible for verifying the actual conditions and dimensionS of the existing retention basin. The Contractor shall account for any potential discrepancies in their bid. No additional change orders will be issued due to retention basin location and deviations.

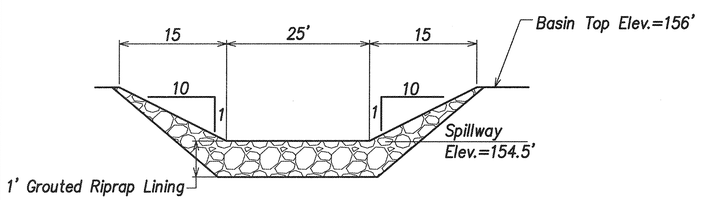

Section C C-30 | C-51
Scales: Hor: 1"=10'
Vert: 1"=2'

Emergency Overflow Spillway Section

Graphic Scales:

1" = 2' 2' 1' 0' 2' 4'
1" = 8' 8' 4' 0' 8' 16'
1" = 5' 5' 2.5' 0' 5' 10'
1" = 10' 10' 5' 0' 10' 20'
1" = 40' 40' 20' 0' 40' 80'
Scales In Feet

REVISION NO.	SYM.	DESCRIPTION	SHT./OF	DATE	APPROVED

GORDON T. RING
LICENSED PROFESSIONAL ENGINEER
No. 9300-C
HAWAII, U.S.A.

THIS WORK WAS PREPARED BY ME OR UNDER MY SUPERVISION AND CONSTRUCTION OF THIS PROJECT WILL BE UNDER MY OBSERVATION.

SIGNATURE 4/30/16 EXP. DATE

R. M. TOWILL CORPORATION
Planning • Engineering • Environmental Services • Photogrammetry • Surveying • Construction Management
808 842 1133 2024 North King Street Suite 200 Honolulu Hawaii 96819-3404

STATE OF HAWAII
DEPARTMENT OF LAND AND NATURAL RESOURCES
ENGINEERING DIVISION

CENTRAL MAUI REGIONAL SPORTS COMPLEX
PHASE 3
WAILUKU, MAUI, HAWAII

DRAINAGE DETAILS

DESIGNED: GR/NN/JP	SUBMITTED: --
DRAWN: GR/NN/JP	DATE: DECEMBER 2015
CHECKED: GTR	SCALE: AS SHOWN
APPROVED: CHIEF ENGINEER	DEC 2 2 2015 DATE
	DRAWING NO. C-51

JOB NO. F93C817D

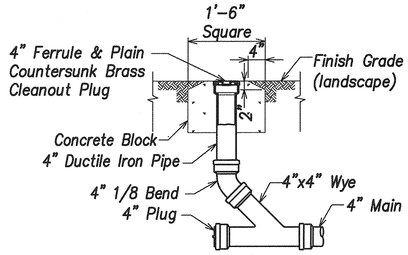

Sewer Cleanout to Grade

Not to Scale

A C-23|C-52

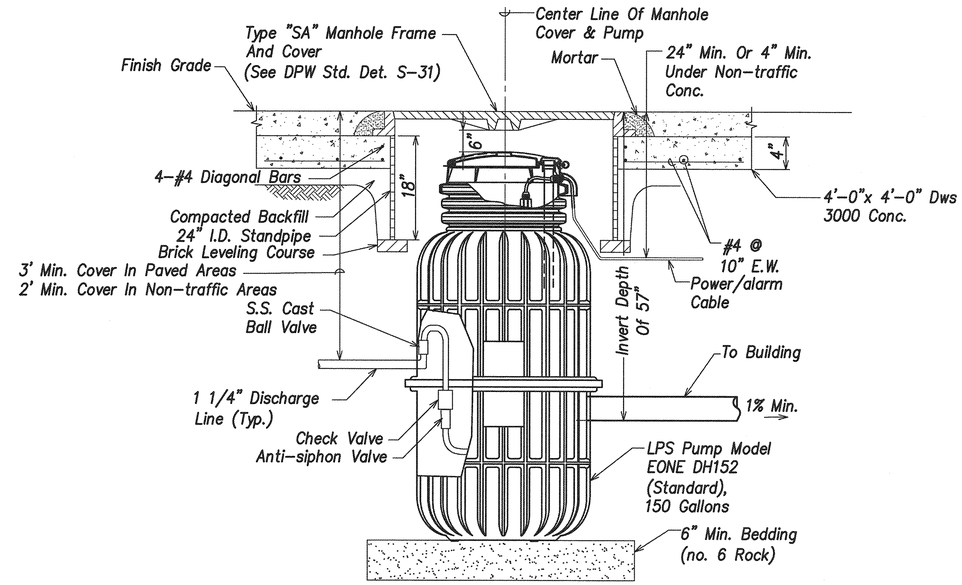

Sewer Pump Detail - Paved

Not to Scale

C C-23|C-52

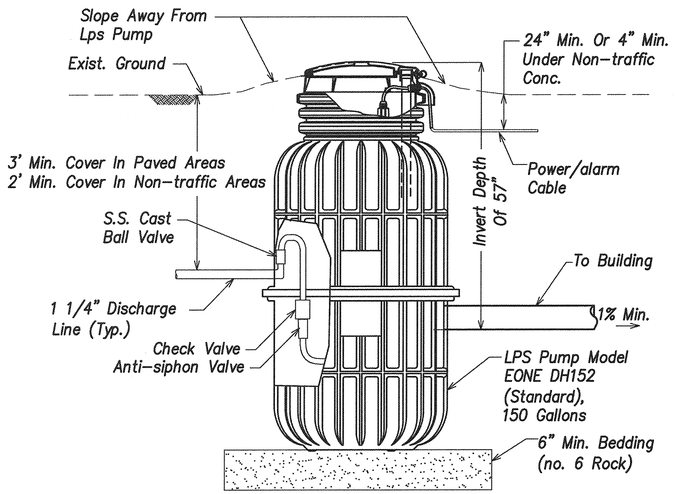

Sewer Pump Detail - Unpaved

Not to Scale

B C-26|C-52

Pump Notes:

1. Pump Shall Be Supplied With An Emergency Generator Receptacle And Manual Transfer Switch.
2. Sewer Pump Consists Of A Grinder Pump, Check Valve, Tank, And All Necessary Controls Packaged Into A Single Unit. The Unit Pumps At 11 GPM.
3. Pump Shall Be Eone Model Dh152 Or Approved Equal.

REVISION NO.	SYM.	DESCRIPTION	SHT./OF	DATE	APPROVED

GORDON T. RING
LICENSED PROFESSIONAL ENGINEER
No. 9300-C
HAWAII, U.S.A.

THIS WORK WAS PREPARED BY ME OR UNDER MY SUPERVISION AND CONSTRUCTION OF THIS PROJECT WILL BE UNDER MY OBSERVATION.

SIGNATURE 4/30/16 EXP. DATE

R. M. TOWILL CORPORATION
Planning - Engineering - Environmental Services - Photogrammetry - Surveying - Construction Management
808 842 1133 2024 North King Street Suite 200 Honolulu, Hawaii 96819-3404

STATE OF HAWAII
DEPARTMENT OF LAND AND NATURAL RESOURCES
ENGINEERING DIVISION

CENTRAL MAUI REGIONAL SPORTS COMPLEX
PHASE 3
WAILUKU, MAUI, HAWAII

SEWER DETAILS

DESIGNED: GR/NN/JP	SUBMITTED: --
DRAWN: GR/NN/JP	DATE: DECEMBER 2015
CHECKED: GTR	SCALE: AS SHOWN

APPROVED: CHIEF ENGINEER — DEC 2 2 2015 DATE

DRAWING NO. C-52

JOB NO. F93C817D