# QUEEN STREET / WAIMANU STREET CROSSWALK IMPROVEMENTS PHASE 2

## HONOLULU, OAHU, HAWAII

## CONSTRUCTION DOCUMENTS

## PROJECT TEAM

### OWNER

HAWAII COMMUNITY DEVELOPMENT AUTHORITY
545 QUEEN STREET
HONOLULU, HI 96813

TEL: 808.594.0318

### CIVIL ENGINEER

WILSON OKAMOTO CORPORATION
1907 S BERETANIA STREET, SUITE 400
HONOLULU, HI 96826

TEL: 808.946.2277
FAX: 808.946.2253

### ENGINEER'S CONSULTANTS

#### ELECTRICAL ENGINEER

RONALD N.S. HO & ASSOCIATES, INC.
2153 NORTH KING STREET
HONOLULU, HI 96819

TEL: 808.941.0577
FAX: 808.945.2646

#### SURVEYOR

CONTROL POINT SURVEYING, INC.
615 PIIKOI STREET, SUITE 700
HONOLULU, HI 96814

TEL: 808.591.2022
FAX: 808.591.8333

#### STRUCTURAL ENGINEER

COFFMAN ENGINEERS, INC.
745 FORT STREET #400
HONOLULU, HI 96813

TEL: 808.687.8884

## APPROVALS

CHIEF, TRAFFIC SIGNALS AND TECHNOLOGY, D.T.S. — DATE
CITY & COUNTY OF HONOLULU

DIRECTOR, DEPARTMENT OF PLANNING AND PERMITTING — DATE
CITY & COUNTY OF HONOLULU
(FOR CONSTRUCTION WITHIN CITY ROW ONLY)

## VICINITY MAP

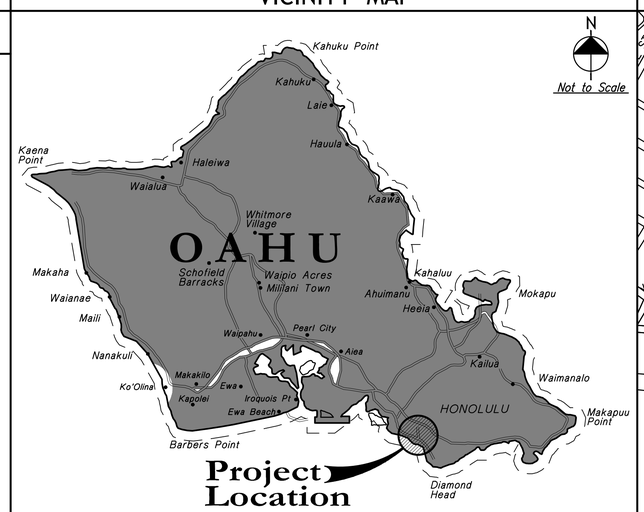


## LOCATION MAP

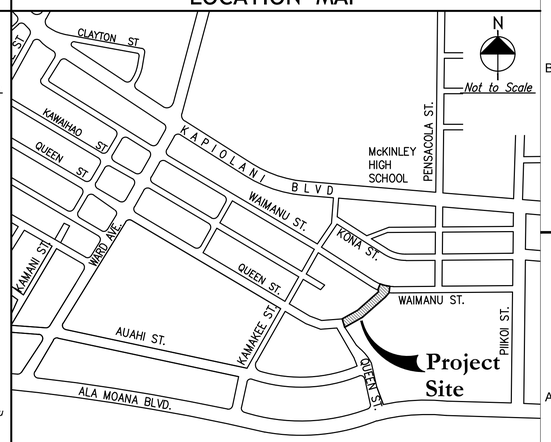



WILSON OKAMOTO CORPORATION
1907 South Beretania Street Suite 400
Honolulu, Hawaii, U.S.A. 96826
PH 808-946-2277 FX 808-946-2253
www.wilsonokamoto.com


PROJECT ID
QUEEN ST/ WAIMANU ST CROSSWALK IMPROVEMENTS PHASE 2
HONOLULU, HAWAII

*PREPARED FOR*
HAWAII COMMUNITY DEVELOPMENT AUTHORITY

CONSULTANT

FOR COORDINATION PURPOSES ONLY

NOT TO BE USED FOR CONSTRUCTION

| | |
|---|---|
| DESIGNED BY: CD | SUPERVISED BY: CL |
| DRAWN BY: CD | CHECKED BY: CL |
| CAD FILE: | PROJECT NO.: 10736-01 |
| SCALE: AS NOTED | DATE: JULY 19, 2023 |

| REV | DATE | DESCRIPTION |
|---|---|---|

SHEET TITLE
TITLE SHEET WITH LOCATION MAP VICINITY MAP AND APPROVALS

DRAWING NO.
**T-01**



2023/CP-58

# DRAWING INDEX


| DWG # | SHEET # | SHEET TITLE |
|---|---|---|
| T-01 | 1 | TITLE SHEET WITH LOCATION MAP VICINITY MAP AND APPROVALS |
| T-02 | 2 | DRAWING INDEX |
| | | CIVIL |
| C-01 | 3 | NOTES |
| C-02 | 4 | NOTES |
| C-03 | 5 | EROSION AND SEDIMENT CONTROL NOTES |
| C-04 | 6 | DEMOLITION AND EROSION AND SEDIMENT CONTROL PLAN |
| C-05 | 7 | ROADWAY PLAN |
| C-06 | 8 | STREET TREE PLAN |
| C-07 | 9 | ELEVATION PLAN |
| C-08 | 10 | CURB RAMP PLAN 1 |
| C-09 | 11 | CURB RAMP PLAN 2 |
| C-10 | 12 | TYPICAL MEDIAN PROFILE |
| C-11 | 13 | PAVEMENT MARKING & STRIPING PLAN |
| C-12 | 14 | MISCELLANEOUS DETAILS 1 |
| C-13 | 15 | MISCELLANEOUS DETAILS 2 |
| C-14 | 16 | MISCELLANEOUS DETAILS 3 |
| C-15 | 17 | SECTIONS |
| TS-01 | 18 | TRAFFIC SIGNAL NOTES AND LEGEND |
| TS-02 | 19 | TRAFFIC SIGNAL PLAN |
| TS-03 | 20 | TRAFFIC SIGNAL DETAILS 1 |
| TS-04 | 21 | TRAFFIC SIGNAL DETAILS 2 |
| TS-05 | 22 | TRAFFIC SIGNAL DETAILS 3 |
| TC-01 | 23 | TRAFFIC CONTROL PLAN 1 |
| TC-02 | 24 | TRAFFIC CONTROL PLAN 2 |
| TC-03 | 25 | TRAFFIC CONTROL PLAN 3 |
| TC-04 | 26 | TRAFFIC CONTROL PLAN 4 |
| TC-05 | 27 | TRAFFIC CONTROL PLAN 5 |
| TC-06 | 28 | TRAFFIC CONTROL PLAN 6 |
| TC-07 | 29 | TRAFFIC CONTROL PLAN 7 |
| TC-08 | 30 | TRAFFIC CONTROL PLAN 8 |
| TC-09 | 31 | TRAFFIC CONTROL PLAN 9 |
| TC-10 | 32 | TRAFFIC CONTROL PLAN 10 |
| TD-01 | 33 | DETOUR PLAN 1 |
| | | ELECTRICAL |
| E-100 | 34 | ELECTRICAL SYMBOLS LOCATION AND VICNITY MAP |
| E-101 | 35 | HECO NOTES |
| E-102 | 36 | ELECTRICAL PARTIAL DEMOLITION PLAN |
| E-201 | 37 | ELECTRICAL PARTIAL PLAN |
| E-301 | 38 | TRAFFIC SIGNAL DETAILS |
| E-302 | 39 | STREET LIGHTING DETAILS 1 |
| E-303 | 40 | STREET LIGHTING DETAILS 2 |
| E-304 | 41 | STREET LIGHTING CONNECTION DIAGRAM |
| E-401 | 42 | DUCT SECTIONS |
| | | STRUCTURAL |
| S-01 | 43 | EXISTING CATCH BASIN DEMO AND REPAIR NOTES, PLANS, AND DETAILS |
| S-02 | 44 | TRAFFIC SIGNAL POLE FOUNDATION DETAILS |



WILSON OKAMOTO CORPORATION

1907 South Beretania Street Suite 400
Honolulu, Hawaii, U.S.A. 96826
PH 808-946-2277 FX 808-946-2253
www.wilsonokamoto.com


PROJECT ID
QUEEN ST/ WAIMANU ST CROSSWALK IMPROVEMENTS PHASE 2
HONOLULU, HAWAII

*PREPARED FOR*
HAWAII COMMUNITY DEVELOPMENT AUTHORITY

CONSULTANT

FOR COORDINATION PURPOSES ONLY

NOT TO BE USED FOR CONSTRUCTION

| | |
|---|---|
| DESIGNED BY: CD | SUPERVISED BY: CL |
| DRAWN BY: CD | CHECKED BY: CL |
| CAD FILE: | PROJECT NO.: 10736-01 |
| SCALE: AS NOTED | DATE: JULY 19, 2023 |

| REV | DATE | DESCRIPTION |
|---|---|---|

SHEET TITLE
DRAWING INDEX

DRAWING NO.
**T-02**

## GENERAL CONSTRUCTION NOTES

1. ALL APPLICABLE CONSTRUCTION WORK SHALL BE DONE IN ACCORDANCE WITH THE STANDARD SPECIFICATIONS FOR PUBLIC WORKS CONSTRUCTION, SEPTEMBER 1986, AND STANDARD DETAILS FOR PUBLIC WORKS CONSTRUCTION, SEPTEMBER 1984, AS AMENDED, OF THE DEPARTMENT OF PUBLIC WORKS, CITY AND COUNTY OF HONOLULU AND THE COUNTIES OF KAUAI, MAUI, AND HAWAII.

2. THE UNDERGROUND PIPES, CABLES AND DUCTLINES KNOWN TO EXIST BY THE ENGINEER FROM HIS SEARCH OF RECORDS ARE INDICATED ON THE PLANS. THE CONTRACTOR SHALL VERIFY THE LOCATIONS AND DEPTHS OF THE FACILITIES AND EXERCISE PROPER CARE IN EXCAVATING THE AREA. WHEREVER CONNECTIONS OF NEW UTILITIES TO EXISTING UTILITIES ARE SHOWN ON THE PLANS, THE CONTRACTOR SHALL EXPOSE THE EXISTING LINES AT THE PROPOSED CONNECTION TO VERIFY THEIR LOCATIONS AND DEPTHS PRIOR TO EXCAVATION FOR THE NEW LINES.

3. NO CONTRACTOR SHALL PERFORM ANY CONSTRUCTION OPERATION SO AS TO CAUSE FALLING ROCKS, SOIL OR DEBRIS IN ANY FORM TO FALL, SLIDE OR FLOW INTO EXISTING CITY DRAINAGE SYSTEMS, OR ADJOINING PROPERTIES, STREETS OR NATURAL WATERCOURSES. SHOULD SUCH VIOLATIONS OCCUR, THE CONTRACTOR MAY BE CITED AND THE CONTRACTOR SHALL IMMEDIATELY MAKE ALL REMEDIAL ACTIONS NECESSARY.

4. THE GENERAL CONTRACTOR/DEVELOPER/OWNER OF THE PROJECT SHALL BE RESPONSIBLE FOR CONFORMANCE WITH APPLICABLE PROVISIONS OF THE HAWAII ADMINISTRATIVE RULES, TITLE 11, CHAPTER 54, "WATER QUALITY STANDARDS," AND TITLE 11, CHAPTER 55, "WATER POLLUTION CONTROL", AS WELL AS CHAPTER 14 OF THE REVISED ORDINANCES OF HONOLULU, AS AMENDED. BEST MANAGEMENT PRACTICES SHALL BE EMPLOYED AT ALL TIMES DURING CONSTRUCTION.

   THE GENERAL CONTRACTOR/DEVELOPER/OWNER OF THE PROJECT SHALL OBTAIN NATIONAL POLLUTANT DISCHARGE ELIMINATION SYSTEM (NPDES) PERMIT COVERAGES(S) FOR THE FOLLOWING:

   1. STORM WATER DISCHARGE ASSOCIATED WITH CONSTRUCTION ACTIVITIES THAT DISTURB ONE (1) ACRE OR MORE, AND

   2. DISCHARGE OF HYDROTESTING EFFLUENT, DEWATERING EFFLUENT, AND WELL DRILLING EFFLUENT TO STATE WATERS.

      IN ACCORDANCE WITH STATE LAW, ALL DISCHARGES RELATED TO PROJECT CONSTRUCTION OR OPERATIONS ARE REQUIRED TO COMPLY WITH STATE WATER QUALITY STANDARDS (HAWAII ADMINISTRATIVE RULES, CHAPTER 11-54). BEST MANAGEMENT PRACTICES SHALL BE USED TO MINIMIZE OR PREVENT THE DISCHARGE OF SEDIMENT, DEBRIS, AND OTHER POLLUTANTS TO STATE WATERS. PERMIT COVERAGE IS AVAILABLE FROM THE DEPARTMENT OF HEALTH, CLEAN WATER BRANCH AT http://health.hawaii.gov/cwb. THE OWNER/DEVELOPER/CONTRACTOR IS RESPONSIBLE FOR OBTAINING OTHER FEDERAL, STATE, OR LOCAL AUTHORIZATIONS AS REQUIRED BY LAW.

5. FOR NON-CITY PROJECTS, THE CONTRACTOR SHALL NOTIFY THE CIVIL ENGINEERING BRANCH, D.P.P. AT 768-8084 TO ARRANGE FOR INSPECTIONAL SERVICES AND SUBMIT TWO (2) SETS OF APPROVED CONSTRUCTION PLANS SEVEN (7) DAYS PRIOR TO COMMENCEMENT OF CONSTRUCTION WORK.

6. CONFINED SPACE
   FOR ENTRY BY CITY PERSONNEL, INCLUDING INSPECTORS, INTO A PERMIT REQUIRED CONFINED SPACE AS DEFINED IN 29 CFR PART 1910.146(b), THE CONTRACTOR SHALL BE RESPONSIBLE FOR PROVIDING:

   I. ALL SAFETY EQUIPMENT REQUIRED BY THE CONFINED SPACE REGULATIONS APPLICABLE TO ALL PARTIES OTHER THAN THE CONSTRUCTION INDUSTRY, TO INCLUDE, BUT NOT LIMITED TO, THE FOLLOWING:

      A. FULL BODY HARNESSES FOR UP TO TWO PERSONNEL.
      B. LIFELINE AND ASSOCIATED CLIPS.
      C. INGRESS/EGRESS AND FALL PROTECTION EQUIPMENT.
      D. TWO-WAY RADIOS (WALKIE-TALKIES) IF OUT OF LINE-OF SIGHT.
      E. EMERGENCY (ESCAPE) RESPIRATOR (10 MINUTE DURATION).
      F. CELLULAR TELEPHONE TO CALL FOR EMERGENCY ASSISTANCE.
      G. CONTINUOUS GAS DETECTOR (CALIBRATED) TO MEASURE OXYGEN, HYDROGEN SULFIDE CARBON MONOXIDE AND FLAMMABLES (CAPABLE OF MONITORING AT A DISTANCE AT LEAST 20-FEET AWAY).
      H. PERSONAL MULTI-GAS DETECTOR TO BE CARRIED BY INSPECTOR.

   II. CONTINUOUS FORCED AIR VENTILATION ADEQUATE TO PROVIDE SAFE ENTRY CONDITIONS.

   III. ONE ATTENDANT/RESCUE PERSONNEL TOPSIDE (TWO, IF CONDITIONS WARRANT IT)

6. PURSUANT TO CHAPTER 6E, HRS, IN THE EVENT ANY ARTIFACTS OR HUMAN REMAINS ARE UNCOVERED DURING CONSTRUCTION OPERATIONS, THE CONTRACTOR SHALL IMMEDIATELY SUSPEND WORK AND NOTIFY THE HONOLULU POLICE DEPARTMENT, THE STATE DEPARTMENT OF LAND AND NATURAL RESOURCES-HISTORIC PRESERVATION DIVISION (692-8015). IN ADDITION, FOR NON-CITY PROJECTS, THE CONTRACTOR SHALL INFORM THE CIVIL ENGINEERING BRANCH, DEPARTMENT OF PLANNING AND PERMITTING (768-8084); AND FOR CITY PROJECTS, NOTIFY THE RESPONSIBLE CITY AGENCY.

7. FOR PROJECTS ABUTTING STATE HIGHWAY'S RIGHTS-OF WAY, THE OWNER OR HIS AUTHORIZED REPRESENTATIVE SHALL NOTIFY THE STATE DEPARTMENT OF TRANSPORTATION, HIGHWAYS DIVISION, OAHU DISTRICT, DRAINAGE DISCHARGE UNIT AT 831-6793 FOR AN ASSESSMENT OF STATE HIGHWAYS PERMIT REQUIREMENTS.

8. FOR BENCH MARK, SEE SHEET C-05.

9. THE CONTRACTOR SHALL NOTIFY THE CIVIL ENGINEERING BRANCH, DEPARTMENT OF PLANNING & PERMITTING AT 768-8084 TO ARRANGE FOR INSPECTION SERVICES AND SUBMIT TWO (2) SETS OF APPROVED CONSTRUCTION PLANS SEVEN (7) DAYS PRIOR TO COMMENCEMENT OF CONSTRUCTION.

10. THE CONTRACTOR SHALL BE RESPONSIBLE FOR VERIFYING THE LOCATIONS AND INVERTS OF ALL EXISTING UTILITIES AND DRAINAGE SYSTEMS WHETHER SHOWN ON PLANS OR NOT, PRIOR TO COMMENCEMENT OF CONSTRUCTION.

## GENERAL CONSTRUCTION NOTES (CONT.)

11. THE CONTRACTOR SHALL IMMEDIATELY NOTIFY THE ENGINEER OF ANY DISCREPANCY OR CONFLICT FOUND IN THE FIELD PRIOR TO OR DURING THE COURSE OF CONSTRUCTION AND SHALL NOT PROCEED WITH CONSTRUCTION UNTIL THE ENGINEER RESOLVES THE SAID DISCREPANCY OR CONFLICT.

12. UNLESS OTHERWISE NOTED, ALL EXISTING PAVEMENT, UTILITY LINES, AND OTHER IMPROVEMENTS DAMAGED OR UNDERMINED AS A RESULT OF THE CONTRACTOR'S OPERATIONS, SHALL BE RECONSTRUCTED OR REPLACED BY THE CONTRACTOR AT HIS OWN EXPENSE TO MATCH EXISTING CONDITIONS.

13. ALL VISIBLE UTILITY STRUCTURES HAVE BEEN LOCATED IN THE FIELD, HOWEVER, CONNECTIONS TO UNDERGROUND UTILITY LINES AS SHOWN ARE UNVERIFIED AND COMPILED FROM EXISTING DATA. UNDERGROUND UTILITIES SHOWN HEREON ARE FOR INFORMATION ONLY, HAVING BEEN OBTAINED FROM THE BEST AVAILABLE SOURCES. NO GUARANTEE IS MADE AS TO THE ACCURACY OR COMPLETENESS OF SAID INFORMATION. THE CONTRACTOR SHALL BE RESPONSIBLE FOR AND PAY FOR ALL DAMAGED UTILITIES.

14. ALL EXISTING UTILITIES, WHETHER OR NOT SHOWN ON THE DRAWINGS SHALL BE PROTECTED AT ALL TIMES BY THE CONTRACTOR DURING CONSTRUCTION. DAMAGE TO THE EXISTING UTILITIES SHALL BE REPAIRED BY THE CONTRACTOR AT HIS EXPENSE.

15. EXISTING TOPOGRAPHIC FEATURES ARE FROM FIELD SURVEY BY CONTROL POINT SURVEYING, INC. DATED FEBRUARY 16, 2022 REV. 03/13/23.

16. THE CONTRACTOR SHALL OBSERVE AND COMPLY WITH ALL FEDERAL, STATE AND LOCAL LAWS REQUIRED FOR THE PROTECTION OF PUBLIC HEALTH AND SAFETY AND ENVIRONMENTAL QUALITY.

17. THE CONTRACTOR SHALL NOTIFY ALL AGENCIES TO VERIFY THE ACTUAL LOCATION OF ALL UTILITIES IN THE PROJECT AREA PRIOR TO CONSTRUCTION. THE CONTRACTOR SHALL COORDINATE ALL WORK.

18. WHEN TRENCH EXCAVATION IS ADJACENT TO OR UNDER EXISTING STRUCTURES OR FACILITIES, THE CONTRACTOR SHALL BE RESPONSIBLE FOR PROPERLY SHEETING AND BRACING THE EXCAVATION AND STABILIZING THE EXISTING GROUND TO RENDER IT SAFE AND SECURE FROM POSSIBLE SLIDES, CAVE-INS AND SETTLEMENT, AND FOR PROPERLY SUPPORTING EXISTING STRUCTURES AND FACILITIES WITH BEAMS, STRUTS OR UNDERPINNING TO FULLY PROTECT THE EXISITING STRUCTURES FROM DAMAGE.

19. ALL ABANDONED PIPE OPENINGS SHALL BE PLUGGED WITH CLASS "C" CONCRETE TO A DEPTH OF ONE AND ONE-HALF TIMES THE DIAMETER OF THE PIPE.

## TRAFFIC NOTES FOR WORK ON CITY & COUNTY STREETS

1. A PERMIT SHALL BE OBTAINED FROM THE DEPARTMENT OF TRANSPORTATION SERVICES BEFORE WORK ON ANY PORTION OF A PUBLIC STREET OR HIGHWAY MAY BEGIN. CONSTRUCTION TRAFFIC CONTROL PLANS APPROVED BY THE DEPARTMENT OF TRANSPORTATION SERVICES AND/OR THE DEPARTMENT OF PLANNING AND PERMITTING MUST BE PROVIDED WHEN APPLYING FOR THE PERMIT.

2. THE CONTRACTOR SHALL PROVIDE, INSTALL, AND MAINTAIN ALL NECESSARY SIGNS AND OTHER PROTECTIVE FACILITIES, WHICH SHALL CONFORM WITH THE "HAWAII ADMINISTRATION RULES GOVERNING THE USE OF TRAFFIC CONTROL DEVICES AT WORK SITES ON OR ADJACENT TO PUBLIC STREETS AND HIGHWAYS" ADOPTED BY THE DIRECTOR OF TRANSPORTATION, AND THE CURRENT U.S. FEDERAL HIGHWAYS ADMINISTRATION'S "MANUAL ON UNIFORM TRAFFIC CONTROL DEVICES FOR STREET AND HIGHWAYS. PART VI-TRAFFIC CONTROLS FOR STREET AND HIGHWAYS CONSTRUCTION AND MAINTENANCE OPERATIONS.

3. WORK ON ANY CITY STREET AREA MAY BE PERFORMED ONLY BETWEEN THE HOURS OF 8:30 A.M. 3:30 P.M., MONDAY THROUGH FRIDAY, UNLESS OTHERWISE PERMITTED BY THE DEPARTMENT OF TRANSPORTATION SERVICES.

4. DURING WORKING HOURS, THE CONTRACTOR SHALL PROVIDE FOR THROUGH TRAFFIC. DURING NON-WORKING HOURS, ALL TRENCHES SHALL BE COVERED WITH SAFE NON-SKID BRIDGING MATERIAL AND ALL LANES SHALL BE OPEN TO TRAFFIC.

5. AS REQUIRED BY THE DEPARTMENT OF TRANSPORTATION SERVICES, THE CONTRACTOR SHALL PROVIDE OFF-DUTY POLICE OFFICERS TO CONTROL THE FLOW OF TRAFFIC.

6. WHERE PEDESTRIAN WALKWAYS EXIST, THEY SHALL BE MAINTAINED IN PASSABLE CONDITION OR OTHER FACILITIES FOR PEDESTRIANS SHALL BE PROVIDED. PASSAGE BETWEEN WALKWAYS AT INTERSECTIONS SHALL LIKEWISE BR PROVIDED.

7. DRIVEWAYS SHALL BE KEPT OPEN UNLESS THE OWNERS OF THE PROPERTY USING THESE RIGHTS-OF-WAY ARE OTHERWISE PROVIDED FOR SATISFACTORILY.

8. CONTRACTOR SHALL REFERENCE TO THE APPROVAL OF THE DEPARTMENT OF TRANSPORTATION SERVICES AND THE DEPARTMENT OF PLANNING AND PERMITTING, ALL EXISTING TRAFFIC SIGNS, POSTS AND PAVEMENT MARKINGS PRIOR TO THE COMMENCEMENT OF CONSTRUCTION. THE CONTRACTOR SHALL REPLACE OR REPAIR ALL TRAFFIC SIGN, POSTS AND PAVEMENT MARKINGS DISTURBED BY HIS ACTIVITIES.

9. THE CONTRACTOR SHALL NOTIFY THE DEPARTMENT OF PLANNING AND PERMITTING AT 768-8084 ONE (1) WEEK PRIOR TO ANY WORK TO BE DONE ON SIGNS, POST AND PAVEMENT MARKINGS.

10. NO EQUIPMENT SHALL BE STORED WITHIN STREET RIGHT-OF-WAY EXCEPT AT LOCATIONS DESIGNATED IN WRITING AND APPROVED BY THE DEPARTMENT OF TRANSPORTATION SERVICES.

11. HAWAII COMMUNITY DEVELOPMENT AUTHORITY (HCDA). SHALL ENSURE THAT THE CONTRACTOR INSTALLS THE CONSTRUCTION TRAFFIC CONTROL DEVICES IN ACCORDANCE WITH THE MUTCD AND THE HAWAII ADMINISTRATION RULES AS SPECIFIED IN TRAFFIC NOTE #2.

## TRENCHING NOTES

1. PERFORM ALL WORK IN A NEAT AND WORKMANLIKE MANNER AND IN CONFORMITY WITH THE PROVISIONS OF CHAPTER 14, REVISED ORDINANCE OF HONOLULU 1990, AS AMENDED, OR AS MANY BE SUBSEQUENTLY AMENDED.

2. BEFORE PAVEMENT RESTORATION MAY COMMENCE, NOTIFY THE DIRECTOR OR AN AUTHORIZED REPRESENTATIVE AND FURNISH DATA ON TESTS PERFORMED UNDER THE SUPERVISION OF A REGISTERED CIVIL ENGINEER SUBSTANTIATING THAT THE BACKFILL HAS BEEN COMPACTED TO THE DENSITY SPECIFIED IN THE STANDARD SPECIFICATIONS FOR PUBLIC WORKS CONSTRUCTION FOR ALL TRENCHES THAT ARE OVER 2 FEET IN DEPTH IN MAJOR AND SECONDARY STREETS AND FOR ALL TRENCHES OVER FIFTY FEET IN LENGTH AND OVER 2 FEET IN DEPTH IN MINOR AND DEAD END STREETS. THE DIRECTOR MAY ALSO REQUIRE COMPACTION TESTS OF BACKFILL FOR HOLES AND FOR TRENCHES IN LESS THAN 2 FEET IN DEPTH AND ADDITIONAL COMPACTION TESTS ON TRENCHES FOR WHICH THE PERMITTEE HAS FURNISHED TEST DATA.

3. CONTACT THE DEPARTMENT OF PLANNING AND PERMITTING, SITE DEVELOPMENT DIVISION, CIVIL ENGINEERING BRANCH, PERMITTING AND INSPECTION SECTION TO SCHEDULE A FINAL INSPECTION OF PAVEMENT RESTORATION WORK. THE BOND FILED WITH THE CITY WILL BE RELEASED ONE (1) WEAR AFTER THE DATE OF FINAL INSPECTION. ( PHONE NUMBER: 768-8084)

4. PROVIDE SHORING AND TEMPORARY TRENCH COVERS ADEQUATE TO SUPPORT LEGAL TRAFFIC LOADS.

5. ACCOMPLISH EMERGENCY WORK INCLUDING BUT NOT LIMITED TO PATCHING HOLES, REPAIRING TEMPORARY TRENCH COVERS AND INSTALLATION OF WARNING LIGHTS OR BARRICADES WHEN THE "CONTACT FOR EMERGENCY REPAIRS" FURNISHED BY THE APPLICANT IS NOTIFIED. IF THE EMERGENCY WORK IS NOT MADE IN THE REASONABLE TIME WHEN NOTIFIED OR UPON FAILURE OF THE "CONTACT FOR EMERGENCY REPAIRS" RESPOND AND PAY THE COST OF EMERGENCY WORK MADE BY THE DEPARTMENT OF FACILITY MAINTENANCE, DIVISION OF ROAD MAINTENANCE.

6. PURSUANT OF CHAPTER 6E, HRS, IN THE EVENT ANT ARTIFACTS OR HUMAN REMAINS ARE UNCOVERED DURING CONSTRUCTION OPERATIONS, IMMEDIATELY SUSPEND AND NOTIFY THE HONOLULU POLICE DEPARTMENT, THE STATE DEPARTMENT OF LAND AND NATURAL RESOURCES-HISTORIC PRESERVATION DIVISION (692-8015). IN ADDITIONAL, FOR NON-CITY PROJECTS, INFORM THE CIVIL ENGINEERING BRANCH, D.P.P. (768-8084); AND FOR CITY PROJECTS, NOTIFY THE RESPONSIBLE CITY AGENCY.

7. UNDERTAKE, FOR A PERIOD OF ONE (1) YEAR AFTER THE SATISFACTORY COMPLETION AND APPROVAL OF RESTORATION WORK, ANY NECESSARY REPAIRS TO RESTORED WORK OR FACILITIES DISTURBED AND/OR BY THE WORK PERFORMED UNDER THIS PERMIT.

8. REMOVE, RELOCATE, REPLACE, RECONSTRUCT OR ADJUST, AT HIS/HER OWN EXPENSE, ANY OF HIS/HER FACILITIES THAT MAY EXIST ON OR UNDER RIGHT WAY WHENEVER AND AS OFTEN AS MAY BE REQUIRED BY THE DIRECTOR OR AN AUTHORIZED REPRESENTATIVE IN ORDER TO UNDERTAKE THE CONSTRUCTION, RECONSTRUCTION OR MAINTENANCE OF SAID RIGHT OF WAY.

9. KEEP ALL FACILITIES INSTALLED UNDER THE SAID PERMIT IN GOOD REPAIR SO THAT THE PRESENCE OF SUCH FACILITY ON OR UNDER THE RIGHT OF WAY WILL IN NO WAY IMPAIR THE USE OR USEFULNESS OF ANY IMPROVEMENT WHICH MAY NOW EXIST OR HEREAFTER COME INTO EXISTENCE.

10. PROCURE, AT HIS/HER OWN EXPENSE AND KEEP IN FORCE AT ALL INSURANCE NAMING THE CITY AS AN ADDITIONAL INSURED AS REQUIRED BY CHAPTER 14 AFORESAID AND SUPPLY EVIDENCE SATISFACTORY TO THE CITY THAT THE REQUIRED INSURANCE HAS BEEN PROCURED AND IS IN FORCE PRIOR OF THE ISSUANCE OF THE PERMIT.

11. KEEP COPY OF PERMIT AND COPY OF THE PLANS IN THE HANDS OF THE WORKING CREW FOR EXHIBIT UPON REQUEST OF ANY AUTHORIZED REPRESENTATIVE OF THE CITY.

12. SUBMIT AS-BUILT DRAWING TO THE DIRECTOR SHOWING THE ACTUAL CONSTRUCTION PERFORMED. AS-BUILT DRAWING ARE NOT REQUIRED FOR EMERGENCY REPAIRS AND SERVICE CONNECTIONS.

13. THE PERMIT FEE IS NOT REFUNDABLE UNDER ANY CONDITION.

## SIGNS & MARKING NOTES

1. ALL TRAFFIC SIGN AND PAVEMENT MARKING INSTALLATIONS SHALL BE DONE IN ACCORDANCE WITH "MANUAL ON UNIFORM TRAFFIC CONTROL DEVICES FOR STREETS AND HIGHWAYS," 2009 EDITION, AS AMENDED, THE LATEST SPECIFICATIONS FROM THE TRAFFIC REVIEW BRANCH, DEPARTMENT OF PLANNING AND PERMITTING, AND AS SHOWN ON THE PLANS.

2. CONTRACTOR SHALL NOTIFY AND COORDINATE WORK WITH THE CIVIL ENGINEERING BRANCH, DEPARTMENT OF PLANNING AND PERMITTING, ONE (1) WEEK IN ADVANCE OF COMMENCING WORK AT 768-8084.

3. CONTRACTOR SHALL SUBMIT MATERIAL BROCHURES FOR ALL SIGNS AND PAINT MATERIALS TO THE CIVIL ENGINEERING BRANCH, DEPARTMENT OF PLANNING AND PERMITTING.

4. THE SIGNING AND/OR STRIPING CONTRACTOR SHALL KEEP ONE (1) SET OF APPROVED PLANS AT THE PROJECT SITE AT ALL TIMES DURING CONSTRUCTION WORK.

5. CONTRACTOR SHALL PAINT TEMPORARY GUIDELINES AND OUTLINE OF ARROWS, LEGENDS, AND CROSSWALKS WITH A TWO INCH (2") WIDE BRUSHED LINE ON THE DAY THE ROADWAY IS OPENED TO TRAFFIC. THESE MARKINGS MUST BE APPROVED BY THE INSPECTOR FROM THE CIVIL ENGINEERING BRANCH, DEPARTMENT OF PLANNING AND PERMITTING.

6. CONTRACTOR SHALL NOTIFY THE CIVIL ENGINEERING BRANCH, DEPARTMENT OF PLANNING AND PERMITTING AT 768-8084, (3) DAYS IN ADVANCE OF FINAL INSPECTION.

7. CONTRACTOR SHALL MEET WITH THE INSPECTOR FROM THE CIVIL ENGINEERING BRANCH, DEPARTMENT OF PLANNING AND PERMITTING DURING THE FINAL INSPECTION.

8. WITHIN TEN (10) DAYS FOLLOWING NOTIFICATION OF AWARD OF CONTRACT, THE CONTRACTOR SHALL SUBMIT TO THE DEPARTMENT OF PLANNING AND PERMITTING (PHONE 768-8084) FOR APPROVAL, A LIST OF ANY SIGNING AND PAVEMENT MARKING MATERIAL WHICH HE PROPOSES TO INSTALL. THE LIST SHALL BE COMPLETE AS TO THE NAME OF MANUFACTURER, CATALOG NUMBER, AND SHALL BE SUPPLEMENTED WITH MATERIAL BROCHURES.

9. UPON FINAL INSPECTION OF THE PROJECT, THE CONTRACTOR SHALL SUBMIT A LETTER OF CERTIFICATION FOR ALL TRAFFIC SIGNING AND PAVEMENT MARKING MATERIALS INSTALLED.

10. SIGNS SHALL BE ATTACHED TO BRACKETS WITH $\frac{5}{16}$" ZINC PLATED STEEL BOLTS, NUTS AND WASHERS. SIGNS 48" WIDE OR LARGER THAN 10 SQ. FT. IN AREA SHALL BE MOUNTED ON TWO-2" GALV. PIPE POST. THE SIGN SHALL BE INSTALLED WITH AT LEAST (1) ONE FOOT CLEARANCE FROM THE SIGN EDGE TO THE CURB FACE.

11. ALL TRAFFIC SIGNS SHALL BE REFLECTORIZED.

12. RAISED PAVEMENT MARKERS SHALL BE INSTALLED IN ACCORDANCE WITH THE DEPARTMENT OF PLANNING AND PERMITTING STANDARDS.

13. LOCATIONS OF "STOP" SIGN:

    A. INSTALL "STOP" SIGN AT CURB TANGENT POINT.
    B. INSTALL "STOP" SIGN ON METAL STREET LIGHT STANDARD IF A STANDARD IS LOCATED WITHIN 10 FEET OF CURB RETURN.
    C. INSTALL "STOP" SIGN IN FRONT OF UTILITY POLE OF A POLE IS LOCATED WITHIN 10 FEET OF CURB RETURN.

14. PAVEMENT WORD AND SYMBOL MARKINGS SHALL BE IN ACCORDANCE WITH THE DEPARTMENT OF PLANNING AND PERMITTING STANDARDS.

15. THE CONTRACTOR SHALL USE THERMOPLASTIC MATERIAL, APPROVED BY THE CIVIL ENGINEERING BRACH, DEPARTMENT OF PLANNING AND PERMITTING, FOR ALL CROSSWALKS, STOP BARS, PAVEMENT ARROWS, CENTER LINES, LANE LINES, ARC LINES, CHANNELIZED TRAFFIC ISLANDS, AND LEGENDS.

## APPROVALS

CHIEF, CIVIL ENGINEERING BRANCH, D.P.P. — DATE
CITY & COUNTY OF HONOLULU

CHIEF, TRAFFIC REVIEW BRANCH, D.P.P. — DATE
CITY & COUNTY OF HONOLULU


WILSON OKAMOTO CORPORATION
1907 South Beretania Street Suite 400
Honolulu, Hawaii, U.S.A. 96826
PH 808-946-2277 FX 808-946-2253
www.wilsonokamoto.com


PROJECT ID
QUEEN ST/ WAIMANU ST CROSSWALK IMPROVEMENTS PHASE 2
HONOLULU, HAWAII

*PREPARED FOR*
HAWAII COMMUNITY DEVELOPMENT AUTHORITY

CONSULTANT

FOR COORDINATION PURPOSES ONLY

NOT TO BE USED FOR CONSTRUCTION

| | |
|---|---|
| DESIGNED BY: CD | SUPERVISED BY: CL |
| DRAWN BY: CD | CHECKED BY: CL |
| CAD FILE: | PROJECT NO.: 10736-01 |
| SCALE: AS NOTED | DATE: JULY 19, 2023 |

| REV | DATE | DESCRIPTION |
|---|---|---|

SHEET TITLE
NOTES

DRAWING NO.
C-01

## WATER NOTES

1. UNLESS OTHERWISE SPECIFIED, ALL MATERIALS AND CONSTRUCTION OF WATER SYSTEM FACILITIES AND APPURTENANCES SHALL BE IN ACCORDANCE WITH THE CITY AND COUNTY OF HONOLULU BOARD OF WATER SUPPLY'S "WATER SYSTEM STANDARDS", DATED 2002, THE "WATER SYSTEM EXTERNAL CORROSION CONTROL STANDARDS", VOLUME 3, DATED 2021, AND ALL SUBSEQUENT AMENDMENTS AND ADDITIONS.

2. ALL PLANS APPROVED BY THE BOARD OF WATER SUPPLY ARE BASED SOLELY ON THE ADEQUACY OF THE WATER SUPPLY.

3. THE EXISTENCE AND LOCATION OF UNDERGROUND UTILITIES AND STRUCTURES AS SHOWN ON THE PLANS ARE FROM THE LATEST AVAILABLE DATA, BUT ARE NOT GUARANTEED AS TO THEIR ACCURACY OR THE ENCOUNTERING OF OTHER OBSTACLES DURING THE COURSE OF THE WORK. THE CONTRACTOR SHALL BE RESPONSIBLE AND PAY FOR ALL DAMAGES TO EXISTING UTILITIES. THE CONTRACTOR SHALL NOT ASSUME THAT WHERE NO UTILITIES ARE SHOWN, THAT NONE EXIST.

4. THE CONTRACTOR SHALL BE RESPONSIBLE FOR THE PROTECTION OF ALL WATERLINES DURING CONSTRUCTION. THE CONTRACTOR SHALL BE ESPECIALLY CAREFUL WHEN EXCAVATING BEHIND WATERLINES, TEES, AND BENDS WHEREVER THERE IS A POSSIBILITY OF WATERLINE MOVEMENT DUE TO THE REMOVAL OF THE SUPPORTING EARTH BEYOND THE EXISTING REACTION BLOCKS. THE CONTRACTOR SHALL TAKE WHATEVER MEASURES NECESSARY TO PROTECT THE WATERLINES, SUCH AS CONSTRUCTING SPECIAL REACTION BLOCKS (WITH BWS APPROVAL) AND/OR MODIFYING HIS CONSTRUCTION METHOD.

5. RE-APPROVAL SHALL BE REQUIRED IF THIS PROJECT IS NOT UNDER CONSTRUCTION WITHIN A PERIOD OF TWO (2) YEARS.

6. PRIOR TO ANY EXCAVATING, THE CONTRACTOR SHALL VERIFY IN THE FIELD, THE LOCATION OF EXISTING WATERLINES AND APPURTENANCES.

7. ANY ADJUSTMENTS TO THE EXISTING WATER SYSTEM REQUIRED DURING CONSTRUCTION, TO MEET THE REQUIREMENTS OF THE BWS STANDARDS, WHETHER SHOWN ON THE PLANS OR NOT, SHALL BE DONE BY THE CONTRACTOR AT NO COST TO THE BOARD.

8. AT THE ELECTRICAL/CABLE/SIGNAL DUCTLINE WATER CROSSINGS, ADJUST ALL ELECTRICAL/CABLE/SIGNAL DUCTLINE ELEVATIONS TO MAINTAIN 12" VERTICAL CLEAR SEPARATION FROM ALL WATERLINES AT NOT COST TO THE BOARD OF WATER SUPPLY.

9. MAINTAIN 3'-0" MINIMUM HORIZONTAL CLEAR SEPARATION BETWEEN ALL WATERLINES, AND NEAREST ELECTRICAL/CABLE/SIGNAL DUCTLINES PARALLELING THE WATER SYSTEM AT NO COST TO THE BOARD OF WATER SUPPLY.

10. MAINTAIN 3'-0" MINIMUM HORIZONTAL CLEAR SEPARATION BETWEEN ELECTRICAL/CABLE/SIGNAL APPURTENANCES, (INCLUDING ANY MODULAR UNITS) AND THE NEAREST WATERLINE OR WATER APPURTENANCE. CONTRACTOR SHALL FIELD VERIFY FOR ANY CONFLICTS AT EACH ELECTRICAL/CABLE/SIGNAL APPURTENANCE LOCATION. WHERE CONFLICTS OCCUR, THE CONTRACTOR SHALL COORDINATE WITH THE PROJECT ENGINEER TO REVISE THE ELECTRICAL/CABLE/SIGNAL APPURTENANCE TO PROVIDE THE REQUIRED CLEARANCES AT NO COST TO THE BWS.

APPROVED:

MANAGER AND CHIEF ENGINEER, BWS DATE
(FOR WORK AFFECTING BWS FACILITIES IN CITY/STATE R/W
AND BWS EASEMENTS ONLY)


WILSON OKAMOTO CORPORATION
1907 South Beretania Street Suite 400
Honolulu, Hawaii, U.S.A. 96826
PH 808-946-2277 FX 808-946-2253
www.wilsonokamoto.com


PROJECT ID
QUEEN ST/ WAIMANU ST CROSSWALK IMPROVEMENTS PHASE 2
HONOLULU, HAWAII

*PREPARED FOR*
HAWAII COMMUNITY DEVELOPMENT AUTHORITY

CONSULTANT

FOR COORDINATION PURPOSES ONLY

NOT TO BE USED FOR CONSTRUCTION

| | |
|---|---|
| DESIGNED BY: CD | SUPERVISED BY: CL |
| DRAWN BY: CD | CHECKED BY: CL |
| CAD FILE: | PROJECT NO.: 10736-01 |
| SCALE: AS NOTED | DATE: JULY 19, 2023 |

| REV | DATE | DESCRIPTION |
|---|---|---|

SHEET TITLE
NOTES

DRAWING NO.
**C-02**

## EROSION PREVENTION/ SEDIMENT CONTROL NOTES:

1. THE CONTRACTOR SHALL FOLLOW THE GUIDELINES IN THE CITY AND COUNTY OF HONOLULU'S "RULES RELATING TO WATER QUALITY"

2. MEASURES TO CONTROL EROSION AND OTHER POLLUTANTS SHALL BE IN PLACE BEFORE ANY CONSTRUCTION IS INITIATED.

3. PERMANENT STABILIZATION

   ALL DISTURBED AREAS SHALL BE PERMANENTLY STABILIZED USING VEGETATIVE COVERING, PAVEMENT, OR EQUIVALENT, PRIOR TO REMOVING EROSION AND SEDIMENT MEASURES. TRAPPED SEDIMENT AND AREAS OF DISTURBED SOIL WHICH RESULT FROM THE REMOVAL OF THE TEMPORARY MEASURES SHALL BE IMMEDIATELY AND PERMANENTLY STABILIZED.

4. PERIMETER CONTROLS

   PERIMETER CONTROLS ARE REQUIRED DOWNSLOPE OF EQUIPMENT/VEHICLE STAGING AREAS AT THE END OF EACH BUSINESS DAY AND AROUND MATERIAL STOCKPILES THAT ARE NOT ACTIVELY BEING USED. STOCKPILES ARE NOT ALLOWED IN THE CITY RIGHT-OF-WAY.

5. INLET PROTECTION
   - ALL STORM DRAIN INLETS ONSITE AND THOSE OFFSITE WHICH MAY RECEIVE RUNOFF FROM THE SITE SHALL USE AN INLET PROTECTION DEVICE UNLESS THEY ARE DIRECTED TO A SEDIMENT BASIN.
   - SEDIMENT LEVELS MAY NOT EXCEED ONE THIRD OF THE HEIGHT OF A SEDIMENT BARRIER OR INLET PROTECTION DEVICE AT ANY POINT ALONG THE LENGTH OF THE SEDIMENT BARRIER OR THE INLET PROTECTION DEVICE.
   - SEDIMENT BARRIERS AND INLET PROTECTION DEVICES MUST BE UNCLOGGED AND CLEANED WHEN PERFORMANCE IS COMPROMISED.
   - TORN, WEATHERED OR SAGGING SEDIMENT BARRIERS OR INLET PROTECTION DEVICES MUST BE REPAIRED OR REPLACED IMMEDIATELY.

6. TRACKING CONTROL
   - MINIMIZE SEDIMENT TRACK-OUT ONTO OFF-SITE STREETS, OTHER PAVED AREAS, AND SIDEWALKS FROM VEHICLES EXITING THE CONSTRUCTION SITE BY RESTRICTING VEHICLE TRAFFIC TO PROPERLY DESIGNATED AREAS AND USING ADDITIONAL CONTROLS TO REMOVE SEDIMENT FROM VEHICLE TIRES PRIOR TO EXITING THE SITE.
   - VEHICULAR PARKING AND MOVEMENTS ON PROJECT SITES MUST BE CONFINED TO PAVED SURFACES OR PREDEFINED PARKING AREAS AND VEHICLE PATHS, WHICH SHALL BE MARKED WITH FLAGS OR BOUNDARY FENCING.
   - ALL POLLUTANTS AND MATERIALS THAT ARE DROPPED, WASHED, TRACKED, SPILLED, OR OTHERWISE DISCHARGED FROM A PROJECT SITE TO OFF-SITE STREETS, OTHER PAVED AREAS, SIDEWALKS OR THE MS4 MUST BE CLEANED USING DRY METHODS SUCH AS SWEEPING OR VACUUMING.
   - WASHING POLLUTANTS AND MATERIALS THAT ARE DISCHARGED FROM THE PROJECT SITE TO THE MS4 INTO DRAIN INLETS OR CATCH BASINS IS PROHIBITED UNLESS THE MATERIAL IS SEDIMENT AND THE INLETS ARE DIRECTED TO A SEDIMENT BASIN OR SEDIMENT TRAP.

7. BEST MANAGEMENT PRACTICES (BMPS) SHALL NOT BE REMOVED UNTIL FINAL STABILIZATION IS COMPLETE FOR THAT PHASE.

8. REFER TO CITY AND COUNTY OF HONOLULU BEST MANAGEMENT PRACTICES MANUAL-CONSTRUCTION, FOR MORE INFORMATION ON BMPS

9. THE FOLLOWING BMPS WERE DETERMINED TO BE NOT APPLICABLE BASED ON THE SPECIFIC SITE CONDITIONS. AS CONSTRUCTION PROGRESSES, REVISIONS MAY BE NECESSARY AND WILL BE PROVIDED TO DPP INSPECTORS.
   - DEWATERING OPERATIONS: GROUNDWATER IS NOT ANTICIPATED.

10. CONTRACTOR TO COMPLY WITH PROJECT SCHEDULING REQUIREMENT AND SUBMIT THE SCHEDULED START DATE TO THE DIRECTOR IN WRITING 2 WEEKS PRIOR TO STARTING ANY WORK GOVERNED BY THE "RULES RELATING TO WATER QUALITY".

11. AN ESCP COORDINATOR MUST BE DESIGNATED USING THE FORM IN APPENDIX A TO THE RULES RELATING TO WATER QUALITY PRIOR TO PERMITTING.

12. REGULARLY INSPECT AND MAINTAIN ALL EROSION AND SEDIMENT CONTROLS TO ENSURE CONTINUED PERFORMANCE.

## GOOD HOUSEKEEPING BMPS

1. STREET SWEEPING AND VACUUMING. ALL POLLUTANTS DISCHARGED FROM CONSTRUCTION SITE TO OFF-SITE AREAS MUST BE SWEPT OR VACUUMED EACH DAY BEFORE LEAVING THE JOB SITE.

2. MATERIALS DELIVERY, STORAGE AND USE MANAGEMENT. PREVENT, REDUCE, OR ELIMINATE THE DISCHARGE OF POLLUTANTS FROM MATERIAL DELIVERY, STORAGE, AND USE TO THE STORM WATER SYSTEM OR WATERCOURSES BY MINIMIZING THE STORAGE OF HAZARDOUS MATERIALS ONSITE, STORING MATERIALS IN A DESIGNATED AREA, INSTALLING SECONDARY CONTAINMENT. CONSTRUCTION MATERIALS, WASTE, TOXIC AND HAZARDOUS SUBSTANCES, STOCKPILES AND OTHER SOURCES OF POLLUTION SHALL NOT BE STORED IN BUFFER AREAS, NEAR AREAS OF CONCENTRATED FLOW, OR AREAS ABUTTING THE MS4, RECEIVING WATERS, OR DRAINAGE IMPROVEMENTS THAT DISCHARGE OFF-SITE. PRIMARY AND SECONDARY CONTAINMENT CONTROLS AND COVERS SHALL BE IMPLEMENTED TO THE MEP.

3. SPILL PREVENTION AND CONTROL. CREATE AND IMPLEMENT SPILL PREVENTION AND RESPONSE PLANS TO ELIMINATE AND MINIMIZE THE DISCHARGE OF POLLUTANTS TO THE MS4 AND RECEIVING WATERS FROM LEAKS AND SPILLS BY REDUCING THE CHANCE FOR SPILLS, ABSORBING, CONTAINING, AND CLEANING UP SPILLS AND PROPERLY DISPOSING OF SPILL MATERIALS. AT A MINIMUM, ALL PROJECTS SHALL CLEANUP ALL LEAKS AND SPILLS IMMEDIATELY.

4. HAZARDOUS MATERIALS. PREVENT OR REDUCE THE DISCHARGE OF POLLUTANTS TO STORM WATER FROM HAZARDOUS WASTE THROUGH PROPER MATERIAL USE AND WASTE DISPOSAL. IN THE EVENT THAT HAZARDOUS MATERIALS ARE DISCHARGED TO THE MS4, THE PROPERTY OWNER OR ESCP COORDINATOR SHALL IMMEDIATELY NOTIFY THE DEPARTMENT OF FACILITIES MAINTENANCE, HONOLULU FIRE DEPARTMENT, AND HONOLULU POLICE DEPARTMENT OF THE DISCHARGE BY TELEPHONE. A WRITTEN REPORT DESCRIBING THE POLLUTANTS THAT WERE DISCHARGED, THE REASONS FOR THE DISCHARGE, AND THE MEASURES THAT HAVE BEEN TAKEN OR WILL BE TAKEN TO PREVENT A REOCCURRENCE OF THE DISCHARGE SHALL BE SUBMITTED TO THE DIRECTOR NO LESS THAN 3 DAYS AFTER NOTIFICATION BY PHONE.

5. NONHAZARDOUS MATERIALS. IN THE EVENT THAT NONHAZARDOUS MATERIALS ARE DISCHARGED TO THE MS4, THE PROPERTY OWNER OR ESCP COORDINATOR SHALL NOTIFY THE CITY DEPARTMENT OF FACILITIES MAINTENANCE BY TELEPHONE NO LATER THAN THE NEXT BUSINESS DAY. A WRITTEN REPORT DESCRIBING THE POLLUTANTS THAT WERE DISCHARGED, THE REASONS FOR THE DISCHARGE, AND THE MEASURES THAT HAVE BEEN TAKEN OR WILL BE TAKEN TO PREVENT A REOCCURRENCE OF THE DISCHARGE SHALL BE SUBMITTED TO THE DIRECTOR NO LESS THAN 3 DAYS AFTER NOTIFICATION BY PHONE.

6. VEHICLE AND EQUIPMENT CLEANING. ELIMINATE AND MINIMIZE THE DISCHARGE OF POLLUTANTS TO STORM WATER FROM VEHICLE AND EQUIPMENT CLEANING OPERATIONS BY USING OFF-SITE FACILITIES WHEN FEASIBLE, WASHING IN DESIGNATED, CONTAINED AREAS ONLY, AND ELIMINATING DISCHARGES TO THE STORM DRAIN SYSTEM BY EVAPORATING AND/OR TREATING WASH WATER, AS APPROPRIATE OR INFILTRATING WASH WATER FOR EXTERIOR CLEANING ACTIVITIES THAT USE WATER ONLY.

7. VEHICLE AND EQUIPMENT FUELING. PREVENT FUEL SPILLS AND LEAKS BY USING OFF-SITE FACILITIES, FUELING ONLY IN DESIGNATED AREAS, ENCLOSING OR COVERING STORED FUEL, AND IMPLEMENTING SPILL CONTROLS SUCH AS SECONDARY CONTAINMENT AND ACTIVE MEASURES USING SPILL RESPONSE KITS.

8. VEHICLE AND EQUIPMENT MAINTENANCE. ELIMINATE AND MINIMIZE THE DISCHARGE OF POLLUTANTS TO STORM WATER FROM VEHICLE AND EQUIPMENT MAINTENANCE OPERATIONS BY USING OFF-SITE FACILITIES WHEN FEASIBLE, PERFORMING WORK IN DESIGNATED AREAS ONLY, USING SPILL PADS UNDER VEHICLES AND EQUIPMENT, CHECKING FOR LEAKS AND SPILLS, AND CONTAINING AND CLEANING UP SPILLS IMMEDIATELY.

9. SOLID WASTE MANAGEMENT. PREVENT OR REDUCE DISCHARGE OF POLLUTANTS TO THE LAND, GROUNDWATER, AND IN STORM WATER FROM SOLID WASTE OR CONSTRUCTION AND DEMOLITION WASTE BY PROVIDING DESIGNATED WASTE COLLECTION AREAS, COLLECT SITE TRASH DAILY, AND ENSURING THAT CONSTRUCTION WASTE IS COLLECTED, REMOVED, AND DISPOSED OF ONLY AT AUTHORIZED DISPOSAL AREAS.

10. SANITARY/SEPTIC WASTE MANAGEMENT. TEMPORARY AND PORTABLE SANITARY AND SEPTIC WASTE SYSTEMS SHALL BE MOUNTED OR STAKED IN, WELL-MAINTAINED AND SCHEDULED FOR REGULAR WASTE DISPOSAL AND SERVICING. SOURCES OF SANITARY AND/OR SEPTIC WASTE SHALL NOT BE STORED NEAR THE MS4 OR RECEIVING WATERS.

11. STOCKPILE MANAGEMENT. STOCKPILES SHALL NOT BE LOCATED IN DRAINAGE WAYS, WITHIN 50 FEET FROM AREAS OF CONCENTRATED FLOWS, AND ARE NOT ALLOWED IN THE CITY RIGHT-OF-WAY. SEDIMENT BARRIERS OR SILT FENCES SHALL BE USED AROUND THE BASE OF ALL STOCKPILES. STOCKPILES SHALL NOT EXCEED 15 FEET IN HEIGHT. STOCKPILES GREATER THAN 15 FEET IN HEIGHT SHALL REQUIRE 8 FOOT WIDE BENCHING IN ACCORDANCE WITH ROH CHAPTER 18A, ARTICLE 3. STOCKPILES MUST BE COVERED WITH PLASTIC SHEETING OR A COMPARABLE MATERIAL IF THEY WILL NOT BE ACTIVELY USED WITHIN 7 DAYS.

12. LIQUID WASTE MANAGEMENT. LIQUID WASTE SHALL BE CONTAINED IN A CONTROLLED AREA SUCH AS A HOLDING PIT, SEDIMENT BASIN, ROLL-OFF BIN, OR PORTABLE TANK OF SUFFICIENT VOLUME AND TO CONTAIN THE LIQUID WASTES GENERATED. CONTAINMENT AREAS OR DEVICES MUST BE IMPERMEABLE AND LEAK FREE AND SHOULD NOT BE LOCATED WHERE ACCIDENTAL RELEASE OF THE CONTAINED LIQUID CAN DISCHARGE TO WATER BODIES, CHANNELS, OR STORM DRAINS.

13. CONCRETE WASTE MANAGEMENT. PREVENT OR REDUCE THE DISCHARGE OF POLLUTANTS TO STORM WATER FROM CONCRETE WASTE BY CONDUCTING WASHOUT OFFSITE OR PERFORMING ONSITE WASHOUT IN A DESIGNATED AREA CONSTRUCTED AND MAINTAINED IN SUFFICIENT QUANTITY AND SIZE TO CONTAIN ALL LIQUID AND CONCRETE WASTE GENERATED BY WASHOUT OPERATIONS. PLASTIC LINING MATERIAL SHOULD BE A MINIMUM OF 10 MILLIMETER POLYETHYLENE SHEETING AND SHOULD BE FREE OF HOLES, TEARS, OR OTHER DEFECTS THAT COMPROMISE THE IMPERMEABILITY OF THE MATERIAL. CONTAINMENT AREAS OR DEVICES SHOULD NOT BE LOCATED WHERE ACCIDENTAL RELEASE OF THE CONTAINED LIQUID CAN DISCHARGE TO WATER BODIES, CHANNELS, OR STORM DRAINS. WASHOUT FACILITIES MUST BE CLEANED, OR NEW FACILITIES MUST BE CONSTRUCTED AND READY FOR USE ONCE THE WASHOUT IS 75 PERCENT FULL. ONCE CONCRETE WASTES ARE WASHED INTO THE DESIGNATED AREA AND ALLOWED TO HARDEN, THE CONCRETE SHOULD BE BROKEN UP, REMOVED, AND DISPOSED OF AS SOLID WASTES.

14. CONTAMINATED SOIL MANAGEMENT. AT MINIMUM CONTAIN CONTAMINATED MATERIAL SOIL BY SURROUNDING WITH IMPERMEABLE LINED BERMS OR COVER EXPOSED CONTAMINATED MATERIAL WITH PLASTIC SHEETING. CONTAMINATED SOIL SHOULD BE DISPOSED OF PROPERLY IN ACCORDANCE WITH ALL APPLICABLE REGULATIONS.

15. DUST CONTROL. DUST FROM THE PROJECT SITE SHALL NOT BE TRANSPORTED OR DISCHARGED TO OFF-SITE AREAS.

## PROJECT SEQUENCE

1. INSTALL INLET PROTECTION AND PERIMETER CONTROLS AROUND STAGING AREAS AND MATERIAL STOCKPILES AS NEEDED.

2. PROCEED WITH CONSTRUCTION WITH LEAST POSSIBLE DISTURBANCE OF VEGETATIVE AND TEMPORARY STRUCTURES.

3. INSTALL PERIMETER CONTROLS AROUND ACTIVE WORK AREAS AT THE END OF EACH BUSINESS DAY IF NOT STABILIZED.

4. PLANT PERMANENT GROUND COVER ACCORDING TO THE LANDSCAPING PLAN AS SOON AS POSSIBLE.

5. REMOVE OR DISMANTLE TEMPORARY EROSION CONTROL STRUCTURES AFTER PERMANENT STABILIZATION.

## RAIN RESPONSE PLAN

THE FOLLOWING WILL BE PERFORMED WHEN RAIN IS IMMINENT OR IS FORECASTED IN THE NEXT 48 HOURS:

1. TEMPORARY SUSPENSION OF ACTIVE TRENCHING.

2. INSPECT ALL PERIMETER CONTROLS AND INLET PROTECTION DEVICES, AND MAINTAIN AS NEEDED. REINSTALL ANY PERIMETER CONTROLS THAT WERE REMOVED DUE TO ACTIVE WORK IN THE AREA. IF A SEVERE STORM IS EXPECTED, REMOVE INLET PROTECTION DEVICES TO PREVENT FLOODING ON SURROUNDING STREETS.

3. COVER OR RELOCATE MATERIAL STOCKPILES AND LIQUID MATERIAL CONTAINERS TO AVOID CONTACT WITH RAINWATER.

4. PLACE SPILL PANS OR OIL-ONLY SPILL PADS UNDER CONSTRUCTION VEHICLES TO PREVENT RUNOFF FROM CONTACTING ANY SPILLED PETROLEUM PRODUCTS. PROPERLY DISPOSE OF ANY ACCUMULATED OILY WATER AFTER THE RAIN EVENT.

5. RE-INSPECT AFTER THE RAIN EVENT AND REPLACE OR MAINTAIN BMPS AS NEEDED.

APPROVED:

CHIEF, CIVIL ENGINEERING BRANCH, D.P.P. DATE
CITY & COUNTY OF HONOLULU


WILSON OKAMOTO CORPORATION
1907 South Beretania Street Suite 400
Honolulu, Hawaii, U.S.A. 96826
PH 808-946-2277 FX 808-946-2253
www.wilsonokamoto.com


PROJECT ID
QUEEN ST/ WAIMANU ST CROSSWALK IMPROVEMENTS PHASE 2
HONOLULU, HAWAII

*PREPARED FOR*
HAWAII COMMUNITY DEVELOPMENT AUTHORITY

CONSULTANT

FOR COORDINATION PURPOSES ONLY

NOT TO BE USED FOR CONSTRUCTION

| DESIGNED BY: CD | SUPERVISED BY: CL |
|---|---|
| DRAWN BY: CD | CHECKED BY: CL |
| CAD FILE: | PROJECT NO.: 10736-01 |
| SCALE: AS NOTED | DATE: JULY 19, 2023 |

| REV | DATE | DESCRIPTION |
|---|---|---|

SHEET TITLE
EROSION AND SEDIMENT CONTROL NOTES

DRAWING NO.
C-03

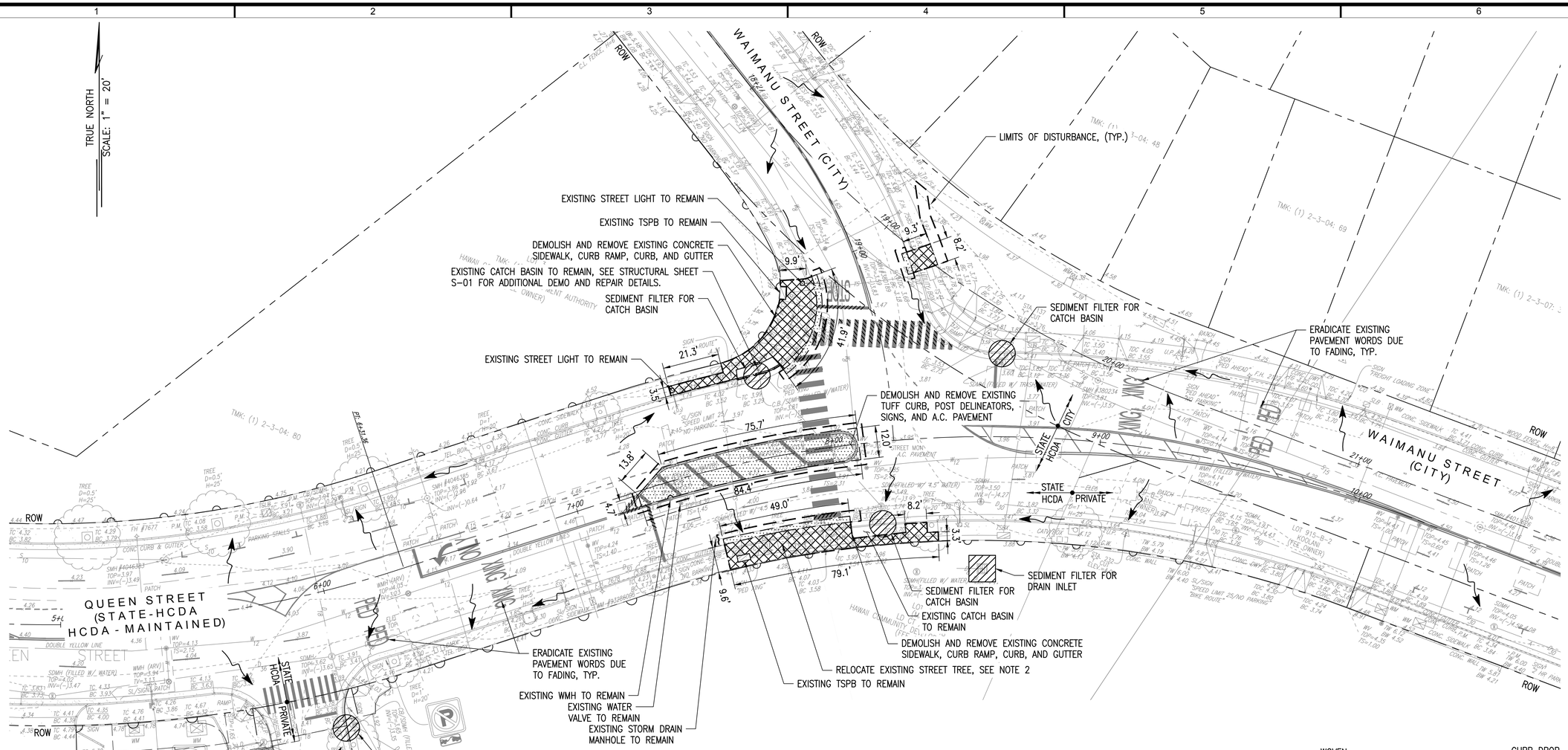


## LEGEND:

- ROW
- SEDIMENT FILTER FOR CATCH BASINS
- SEDIMENT FILTER FOR DRAIN INLET
- FLOW ARROW
- DEMOLISH AND REMOVE OF EXISTING SIDEWALK, CURBS AND GUTTERS
- DEMOLISH AND REMOVE EXISTING A.C. PAVEMENT
- ERADICATE OF STRIPE
- DEMOLITION SAWCUT LINE
- LIMITS OF DISTURBANCE

## NOTES:

1. SEE SHEET C-01 FOR EROSION AND SEDIMENT CONTROL NOTES.
2. INDICATED STREET TREE TO BE RELOCATED AS PART OF THE FUTURE HCDA KOLOWALU PARK IMPROVEMENTS PROJECT.

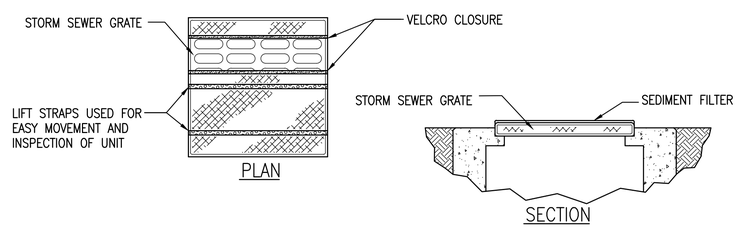


1 / C-04 SEDIMENT FILTER FOR DRAIN INLETS

SCALE: NONE

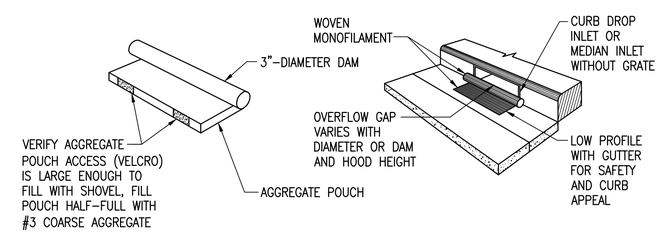


2 / C-04 SEDIMENT FILTER FOR CATCH BASINS

SCALE: NONE

## DEMOLITION AND EROSION AND SEDIMENT CONTROL PLAN (TRENCHING PROJECT)

SCALE : 1"=20'

GRAPHIC SCALE:

20 10 0 20 40

SCALE: 1" = 20'

APPROVED:

CHIEF, CIVIL ENGINEERING BRANCH, D.P.P.
CITY & COUNTY OF HONOLULU

DATE

WILSON OKAMOTO CORPORATION
1907 South Beretania Street Suite 400
Honolulu, Hawaii, U.S.A. 96826
PH 808-946-2277 FX 808-946-2253
www.wilsonokamoto.com

PROJECT ID
QUEEN ST/ WAIMANU ST CROSSWALK IMPROVEMENTS PHASE 2
HONOLULU, HAWAII

*PREPARED FOR*
HAWAII COMMUNITY DEVELOPMENT AUTHORITY

CONSULTANT

FOR COORDINATION PURPOSES ONLY

NOT TO BE USED FOR CONSTRUCTION

| DESIGNED BY: CD | SUPERVISED BY: CL |
|---|---|
| DRAWN BY: CD | CHECKED BY: CL |
| CAD FILE: | PROJECT NO.: 10736-01 |
| SCALE: AS NOTED | DATE: JULY 19, 2023 |

| REV | DATE | DESCRIPTION |
|---|---|---|

SHEET TITLE
DEMOLITION AND EROSION AND SEDIMENT CONTROL PLAN

DRAWING NO.
C-04

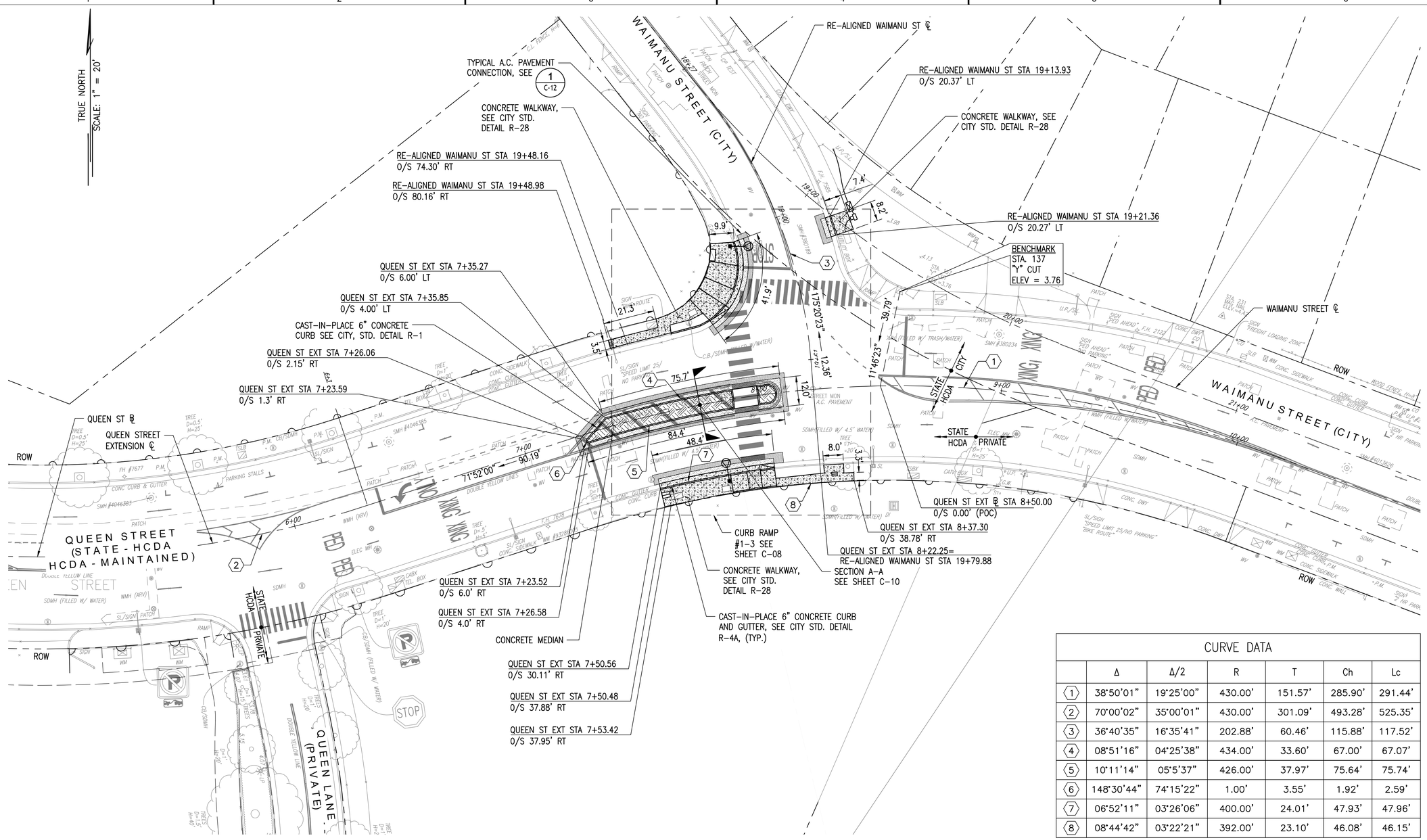


| CURVE DATA | | | | | | |
|---|---|---|---|---|---|---|
| | Δ | Δ/2 | R | T | Ch | Lc |
| 1 | 38°50'01" | 19°25'00" | 430.00' | 151.57' | 285.90' | 291.44' |
| 2 | 70°00'02" | 35°00'01" | 430.00' | 301.09' | 493.28' | 525.35' |
| 3 | 36°40'35" | 16°35'41" | 202.88' | 60.46' | 115.88' | 117.52' |
| 4 | 08°51'16" | 04°25'38" | 434.00' | 33.60' | 67.00' | 67.07' |
| 5 | 10°11'14" | 05°5'37" | 426.00' | 37.97' | 75.64' | 75.74' |
| 6 | 148°30'44" | 74°15'22" | 1.00' | 3.55' | 1.92' | 2.59' |
| 7 | 06°52'11" | 03°26'06" | 400.00' | 24.01' | 47.93' | 47.96' |
| 8 | 08°44'42" | 03°22'21" | 392.00' | 23.10' | 46.08' | 46.15' |

## NOTES:

1. CONTRACTOR SHALL COMPLY WITH CITY ENGINEERING AND POLICY MEMORANDUM NO. CEB-1-09 REGARDING JOINTING REQUIREMENTS FOR CONCRETE WALKWAYS.
2. CURB RAMPS TO BE CONSTRUCTED PER CITY STD R-25A.

## LEGEND:

- ROW
- CONCRETE WALKWAY/MEDIAN
- CONCRETE MEDIAN
- A.C. PAVEMENT

## GRAPHIC SCALE:

20 10 0 20 40

SCALE: 1" = 20'

## ROADWAY PLAN

SCALE : 1"=20'

## APPROVED:

CHIEF, CIVIL ENGINEERING BRANCH, D.P.P. — DATE
CITY & COUNTY OF HONOLULU

CHIEF, TRAFFIC REVIEW BRANCH, D.P.P. — DATE
CITY & COUNTY OF HONOLULU

WILSON OKAMOTO CORPORATION
1907 South Beretania Street Suite 400
Honolulu, Hawaii, U.S.A. 96826
PH 808-946-2277 FX 808-946-2253
www.wilsonokamoto.com

PROJECT ID
QUEEN ST/ WAIMANU ST CROSSWALK IMPROVEMENTS PHASE 2
HONOLULU, HAWAII

*PREPARED FOR*
HAWAII COMMUNITY DEVELOPMENT AUTHORITY

CONSULTANT

FOR COORDINATION PURPOSES ONLY

NOT TO BE USED FOR CONSTRUCTION

| | |
|---|---|
| DESIGNED BY: CD | SUPERVISED BY: CL |
| DRAWN BY: CD | CHECKED BY: CL |
| CAD FILE: | PROJECT NO.: 10736-01 |
| SCALE: AS NOTED | DATE: JULY 19, 2023 |

| REV | DATE | DESCRIPTION |
|---|---|---|

SHEET TITLE
ROADWAY PLAN

DRAWING NO.
C-05

## STREET TREE NOTES:

1. THE STANDARD CITY AND COUNTY OF HONOLULU, DEPARTMENT OF PARKS AND RECREATION SPECIFICATIONS FOR STREET TREE PLANTING AND LANDSCAPING SHALL BE MADE PART OF THE CONSTRUCTION DOCUMENTS FOR THE FUTURE HCDA KOLOWALU PARK IMPROVEMENTS PROJECT.
2. STREET TREE PLANS THAT HAVE BEEN REVISED OR PROJECTS THAT HAVEN'T STARTED CONSTRUCTION WITHIN TWO (2) YEARS OF THE DATE OF THE DEPARTMENT OF PLANNING AND PERMITTING'S (DPP) APPROVAL WILL BE SUBJECT TO RE-APPROVAL.
3. APPROVAL IS FOR STREET TREE PLANNING WITHIN THE ROAD RIGHT-OF-WAY. IT IS NOT AN APPROVAL OF THE PLANNING AND IRRIGATION PLAN OUTSIDE OF THE ROAD RIGHT-OF-WAY.
4. THE CONTRACTOR SHALL BE RESPONSIBLE FOR OBTAINING A PERMIT TO EXCAVATE PUBLIC RIGHT-OF-WAY (TRENCHING PERMIT), PRIOR TO COMMENCING WORK.
5. THE STREET LIGHTING SYSTEM SHALL BE KEPT OPERATIONAL DURING CONSTRUCTION. ANY RELOCATION REQUIRED SHALL BE APPROVED BY THE MECHANICAL/ELECTRICAL DESIGN AND ENGINEERING DIVISION, DEPARTMENT OF DESIGN AND CONSTRUCTION, AND PAID FOR BY THE CONTRACTOR.
6. THE CONTRACTOR SHALL BE RESPONSIBLE FOR ANY DAMAGES TO THE CITY'S EXISTING STREET LIGHTING FACILITIES, TRAFFIC SIGNAL FACILITIES (INCLUDING THE TRAFFIC SIGNAL INTERCONNECT SYSTEM, COMMUNICATION FIBER OPTIC CABLE SYSTEM AND TRAFFIC SIGNAL FIBER OPTIC CABLE SYSTEM). ANY AND ALL DAMAGES TO THESE FACILITIES SHALL BE REPAIRED BY THE CONTRACTOR AT HIS COST IN ACCORDANCE WITH THE REQUIREMENTS OF THE CITY AND COUNTY OF HONOLULU.

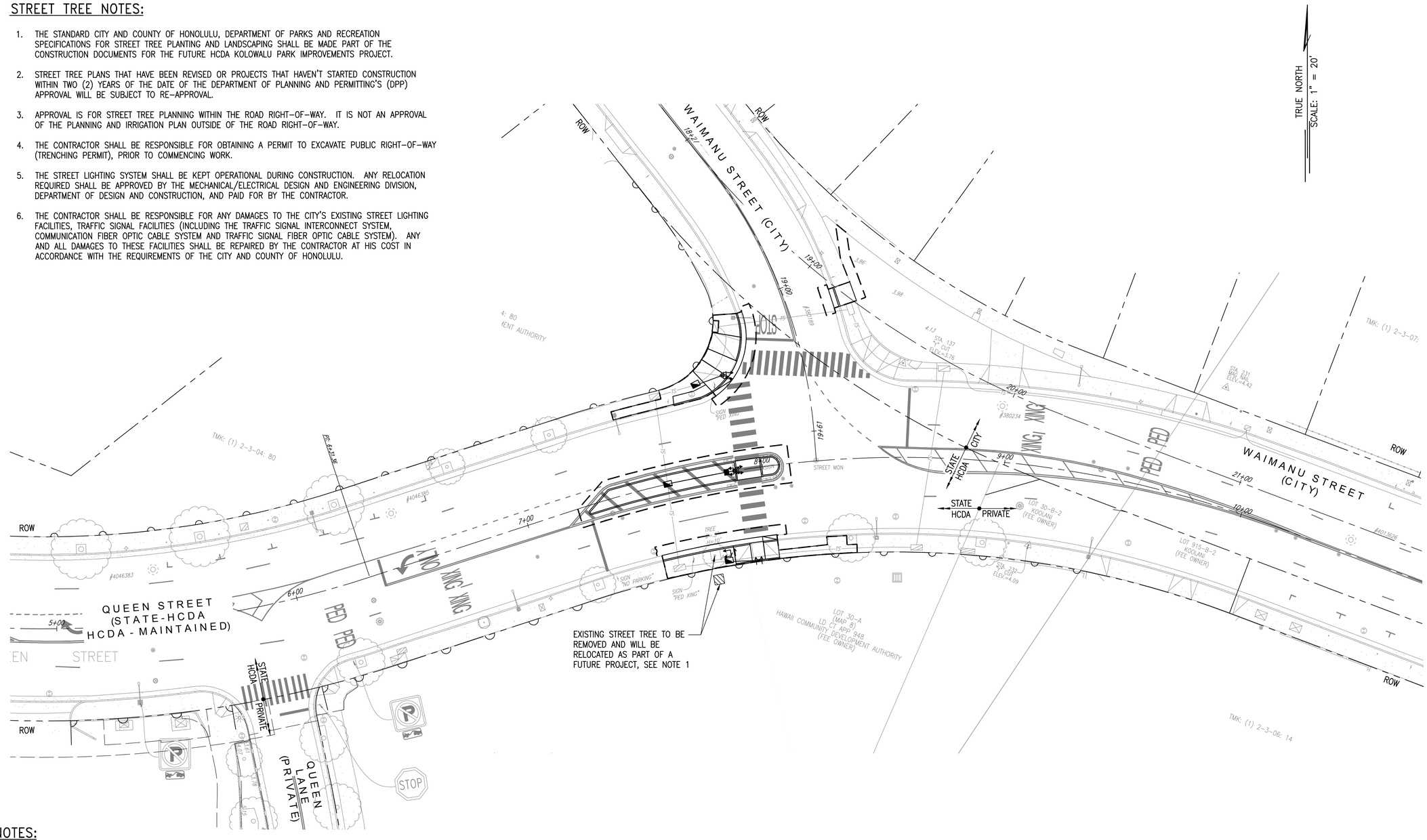


## NOTES:

1. INDICATED STREET TREE TO BE RELOCATED NO MORE THAN 10' AWAY FROM THE SIDEWALK IN COMPLIANCE WITH CITY STANDARDS AS PART OF THE FUTURE HCDA KOLOWALU PARK IMPROVEMENTS PROJECT.

## GRAPHIC SCALE:

20 10 0 20 40

SCALE: 1" = 20'

## STREET TREE PLAN

SCALE : 1"=20'

## APPROVED:

CHIEF, URBAN DESIGN BRANCH, D.P.P.
CITY & COUNTY OF HONOLULU
(FOR STREET TREES ONLY, SHEET C-06)

DATE


WILSON OKAMOTO CORPORATION
1907 South Beretania Street Suite 400
Honolulu, Hawaii, U.S.A. 96826
PH 808-946-2277 FX 808-946-2253
www.wilsonokamoto.com


PROJECT ID
QUEEN ST/ WAIMANU ST CROSSWALK IMPROVEMENTS PHASE 2
HONOLULU, HAWAII

*PREPARED FOR*
HAWAII COMMUNITY DEVELOPMENT AUTHORITY

CONSULTANT

FOR COORDINATION PURPOSES ONLY

NOT TO BE USED FOR CONSTRUCTION

| | |
|---|---|
| DESIGNED BY: CD | SUPERVISED BY: CL |
| DRAWN BY: CD | CHECKED BY: CL |
| CAD FILE: | PROJECT NO.: 10736-01 |
| SCALE: AS NOTED | DATE: JULY 19, 2023 |

| REV | DATE | DESCRIPTION |
|---|---|---|

SHEET TITLE
STREET TREE PLAN

DRAWING NO.
**C-06**

ELEVATION PLAN

SCALE : 1"=20'

APPROVED:

CHIEF, CIVIL ENGINEERING BRANCH, D.P.P.
CITY & COUNTY OF HONOLULU

DATE

WILSON OKAMOTO CORPORATION

1907 South Beretania Street Suite 400
Honolulu, Hawaii, U.S.A. 96826
PH 808-946-2277 FX 808-946-2253
www.wilsonokamoto.com

PROJECT ID
QUEEN ST/ WAIMANU ST CROSSWALK IMPROVEMENTS PHASE 2
HONOLULU, HAWAII

*PREPARED FOR*
HAWAII COMMUNITY DEVELOPMENT AUTHORITY

CONSULTANT

FOR COORDINATION PURPOSES ONLY

NOT TO BE USED FOR CONSTRUCTION

| | |
|---|---|
| DESIGNED BY: CD | SUPERVISED BY: CL |
| DRAWN BY: CD | CHECKED BY: CL |
| CAD FILE: | PROJECT NO.: 10736-01 |
| SCALE: AS NOTED | DATE: JULY 19, 2023 |

| REV | DATE | DESCRIPTION |
|---|---|---|

SHEET TITLE
ELEVATION PLAN

DRAWING NO.
C-07

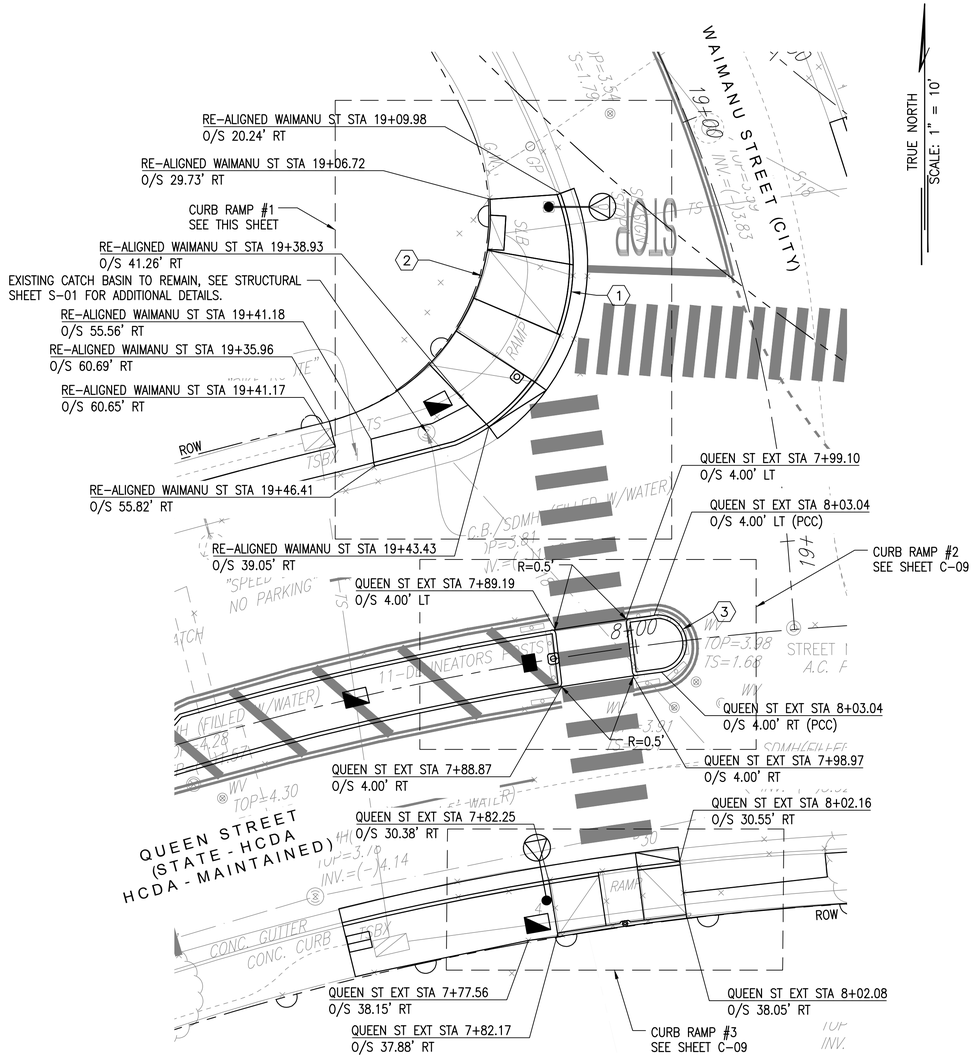


## CURB RAMPS #1, 2 & 3 PLAN

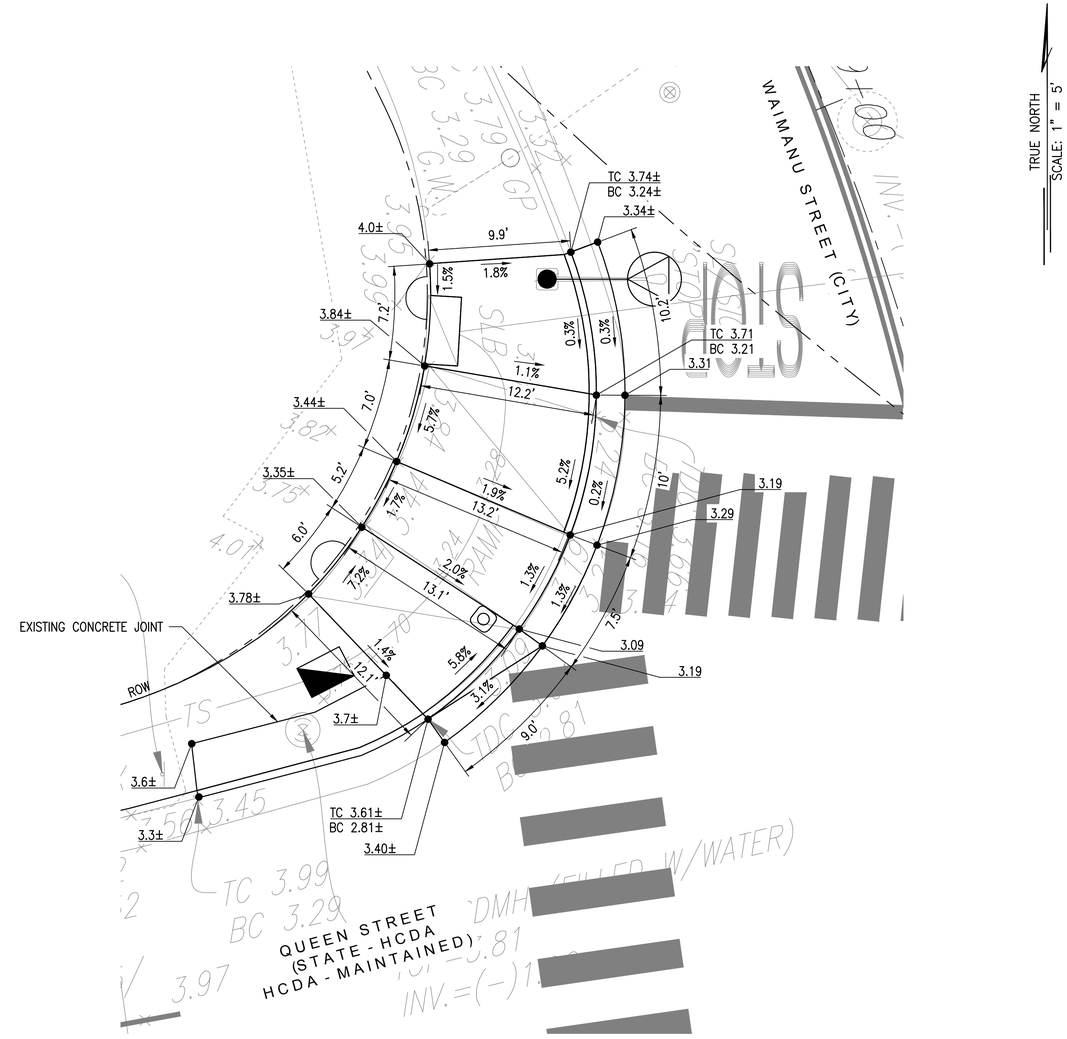


## DETAIL CURB RAMP #1

GRAPHIC SCALE:

10 5 0 10 20

SCALE: 1" = 10'

GRAPHIC SCALE:

5 2.5 0 5 10

SCALE: 1" = 5'

LEGEND:

—·—·— ROW

| CURVE DATA | | | | | | |
|---|---|---|---|---|---|---|
| | Δ | Δ/2 | R | T | Ch | Lc |
| 1 | 75°06'33" | 37°53'16" | 28.00' | 21.53' | 34.11' | 36.71' |
| 2 | 57°14'43" | 28°37'22" | 30.00' | 16.37' | 28.74' | 29.97' |
| 3 | 180°0'0" | 90°0'0" | 4.00' | N/A | 8.00' | 12.57' |

APPROVED:

CHIEF, CIVIL ENGINEERING BRANCH, D.P.P.
CITY & COUNTY OF HONOLULU

DATE

WILSON OKAMOTO CORPORATION
1907 South Beretania Street Suite 400
Honolulu, Hawaii, U.S.A. 96826
PH 808-946-2277 FX 808-946-2253
www.wilsonokamoto.com

PROJECT ID
QUEEN ST/ WAIMANU ST CROSSWALK IMPROVEMENTS PHASE 2
HONOLULU, HAWAII

*PREPARED FOR*
HAWAII COMMUNITY DEVELOPMENT AUTHORITY

CONSULTANT

FOR COORDINATION PURPOSES ONLY

NOT TO BE USED FOR CONSTRUCTION

| | |
|---|---|
| DESIGNED BY: CD | SUPERVISED BY: CL |
| DRAWN BY: CD | CHECKED BY: CL |
| CAD FILE: | PROJECT NO.: 10736-01 |
| SCALE: AS NOTED | DATE: JULY 19, 2023 |

| REV | DATE | DESCRIPTION |
|---|---|---|

SHEET TITLE
CURB RAMP PLAN 1

DRAWING NO.
C-08

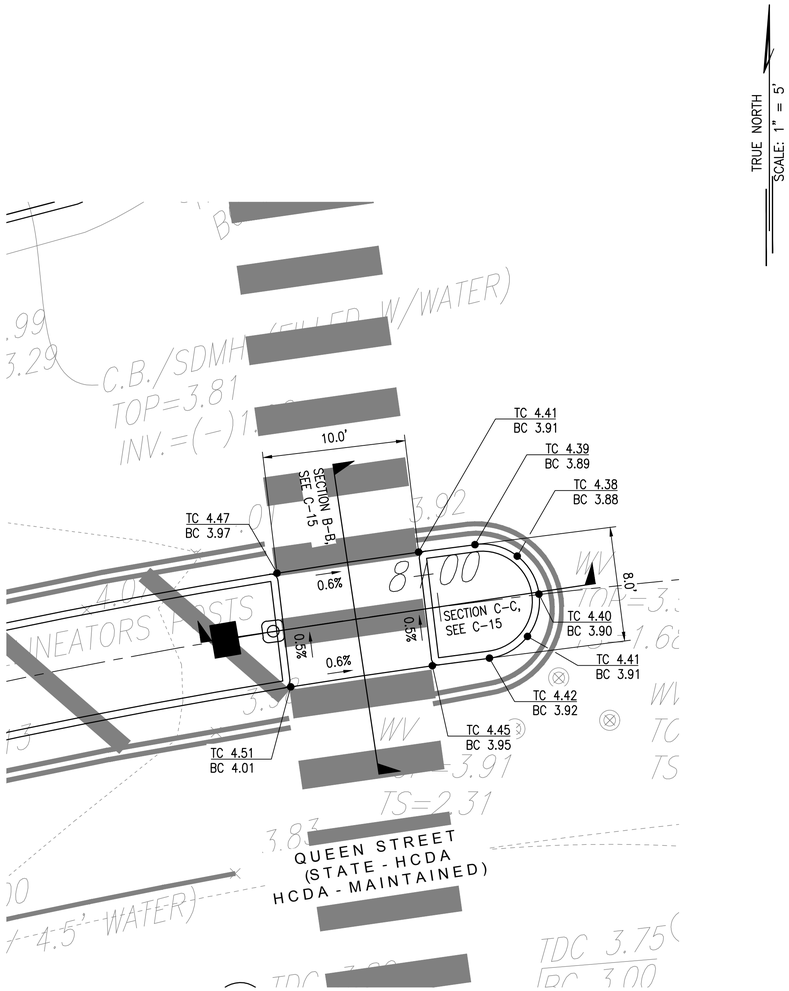


DETAIL CURB RAMP #2

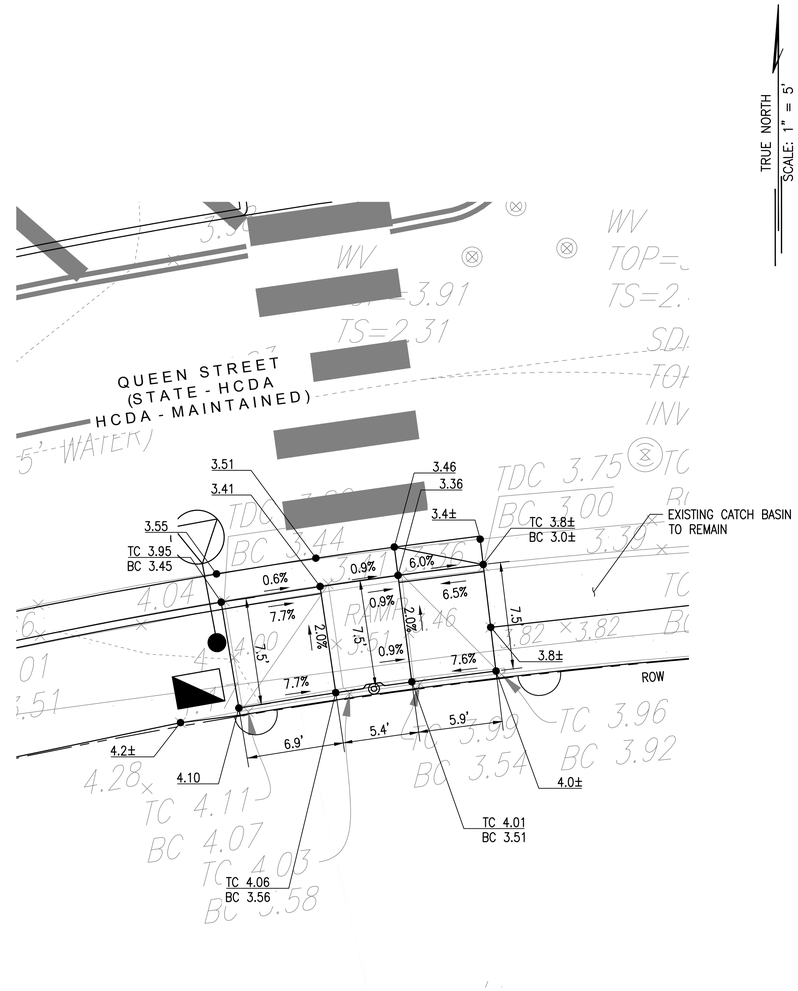


DETAIL CURB RAMP #3

LEGEND:

—·—·— ROW

GRAPHIC SCALE:

5 2.5 0 5 10

SCALE: 1" = 5'

APPROVED:

CHIEF, CIVIL ENGINEERING BRANCH, D.P.P.
CITY & COUNTY OF HONOLULU

DATE

WILSON OKAMOTO CORPORATION
1907 South Beretania Street Suite 400
Honolulu, Hawaii, U.S.A. 96826
PH 808-946-2277 FX 808-946-2253
www.wilsonokamoto.com

PROJECT ID
QUEEN ST/ WAIMANU ST CROSSWALK IMPROVEMENTS PHASE 2
HONOLULU, HAWAII

*PREPARED FOR*
HAWAII COMMUNITY DEVELOPMENT AUTHORITY

CONSULTANT

FOR COORDINATION PURPOSES ONLY

NOT TO BE USED FOR CONSTRUCTION

| | |
|---|---|
| DESIGNED BY: CD | SUPERVISED BY: CL |
| DRAWN BY: CD | CHECKED BY: CL |
| CAD FILE: | PROJECT NO.: 10736-01 |
| SCALE: AS NOTED | DATE: JULY 19, 2023 |

| REV | DATE | DESCRIPTION |
|---|---|---|

SHEET TITLE
CURB RAMP PLAN 2

DRAWING NO.
C-09

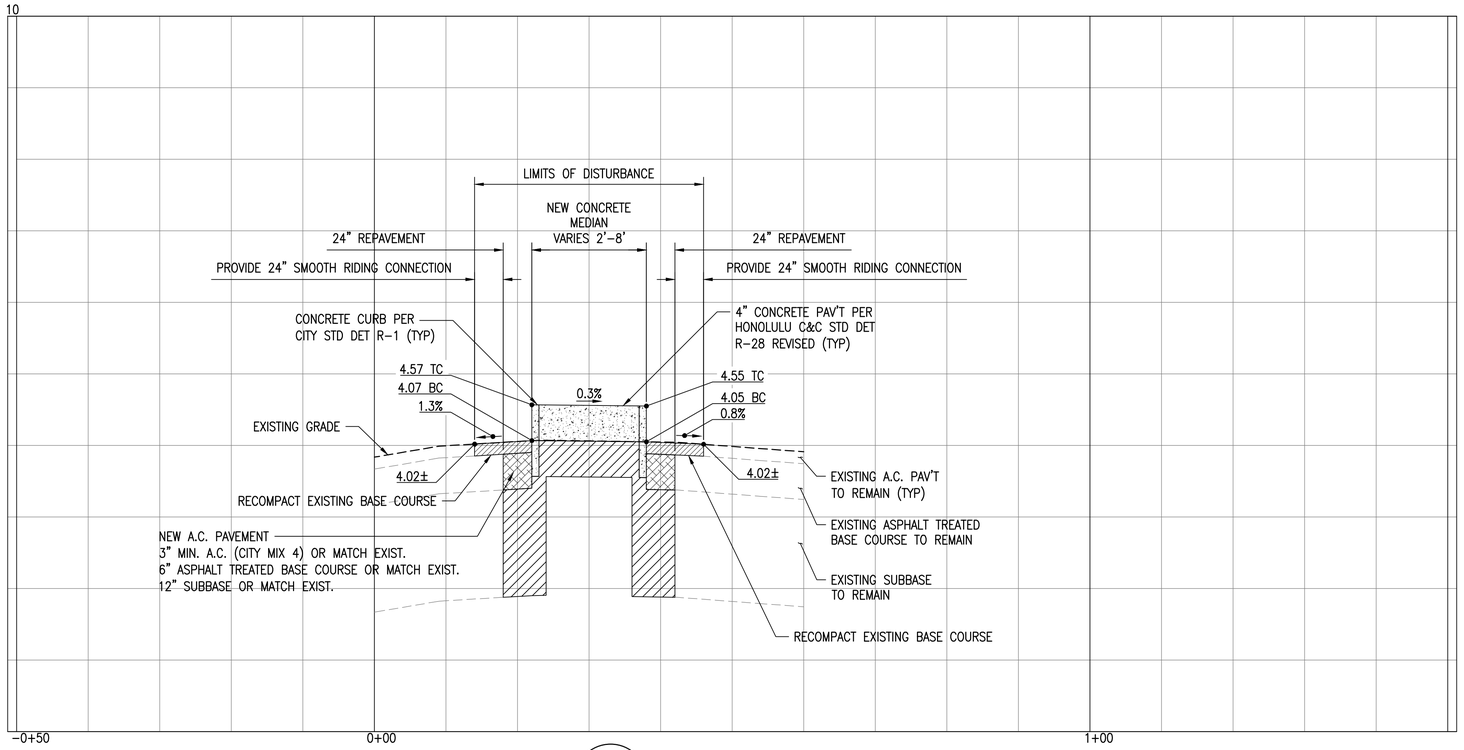


A / C-10 SECTION A-A

SCALE : 1"=10' (HORIZ.)
1"=1' (VERT.)

GRAPHIC SCALE:

10 5 0 10 20
HORIZ. SCALE: 1" = 10'

1 0.5 0 1 2
VERT. SCALE: 1" = 1'

APPROVED

CHIEF, CIVIL ENGINEERING BRANCH, D.P.P.
CITY & COUNTY OF HONOLULU

DATE

WILSON OKAMOTO CORPORATION
1907 South Beretania Street Suite 400
Honolulu, Hawaii, U.S.A. 96826
PH 808-946-2277 FX 808-946-2253
www.wilsonokamoto.com

PROJECT ID
QUEEN ST/ WAIMANU ST CROSSWALK IMPROVEMENTS PHASE 2
HONOLULU, HAWAII

*PREPARED FOR*
HAWAII COMMUNITY DEVELOPMENT AUTHORITY

CONSULTANT

FOR COORDINATION PURPOSES ONLY

NOT TO BE USED FOR CONSTRUCTION

| DESIGNED BY: CD | SUPERVISED BY: CL |
|---|---|
| DRAWN BY: CD | CHECKED BY: CL |
| CAD FILE: | PROJECT NO.: 10736-01 |
| SCALE: AS NOTED | DATE: JULY 19, 2023 |

| REV | DATE | DESCRIPTION |
|---|---|---|

SHEET TITLE
TYPICAL MEDIAN PROFILE

DRAWING NO.
C-10

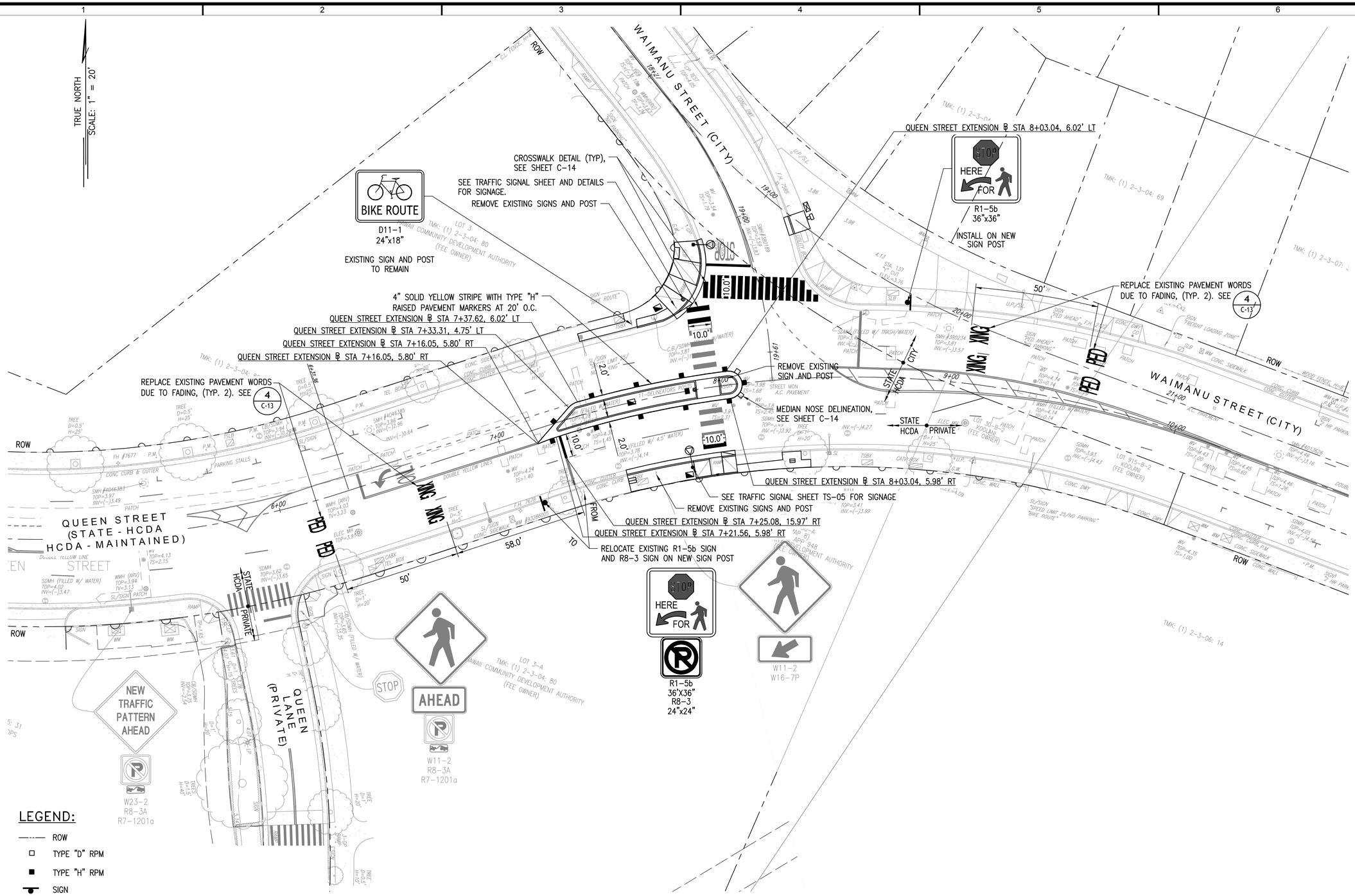


## LEGEND:

- ROW
- TYPE "D" RPM
- TYPE "H" RPM
- SIGN

## NOTES:

1. SEE SHEET C-13 & C-14 FOR STRIPING DETAILS.
2. CONTRACTOR TO USE THERMOPLASTIC STRIPING FOR CROSSWALK RE-STRIPING.

## GRAPHIC SCALE:

20 10 0 20 40

SCALE: 1" = 20'

# PAVEMENT MARKING & STRIPING PLAN

SCALE : 1"=20'

## APPROVED

CHIEF, TRAFFIC REVIEW BRANCH, D.P.P. — DATE
CITY & COUNTY OF HONOLULU

CHIEF, TRAFFIC SIGNALS AND TECHNOLOGY DIVISION, DTS — DATE
CITY AND COUNTY OF HONOLULU

WILSON OKAMOTO CORPORATION
1907 South Beretania Street Suite 400
Honolulu, Hawaii, U.S.A. 96826
PH 808-946-2277 FX 808-946-2253
www.wilsonokamoto.com

PROJECT ID
QUEEN ST/ WAIMANU ST CROSSWALK IMPROVEMENTS PHASE 2
HONOLULU, HAWAII

*PREPARED FOR*
HAWAII COMMUNITY DEVELOPMENT AUTHORITY

CONSULTANT

FOR COORDINATION PURPOSES ONLY

NOT TO BE USED FOR CONSTRUCTION

| | |
|---|---|
| DESIGNED BY: CD | SUPERVISED BY: CL |
| DRAWN BY: CD | CHECKED BY: CL |
| CAD FILE: | PROJECT NO.: 10736-01 |
| SCALE: AS NOTED | DATE: JULY 19, 2023 |

| REV | DATE | DESCRIPTION |
|---|---|---|

SHEET TITLE
PAVEMENT MARKING & STRIPING PLAN

DRAWING NO.
C-11

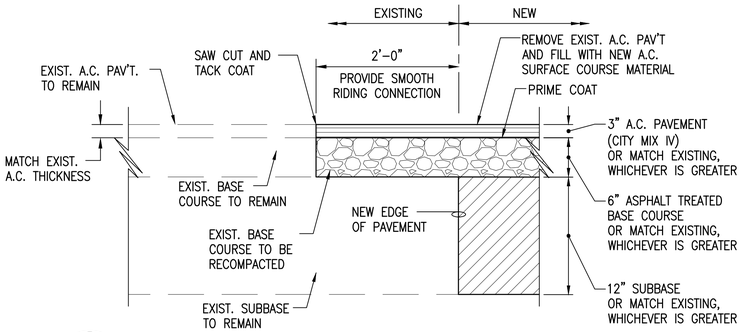


1 / C-12 TYPICAL A.C. PAVEMENT CONNECTION DETAIL

NOT TO SCALE

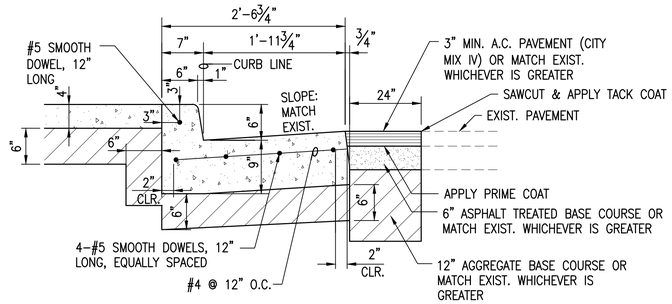


SECTION "A-A"

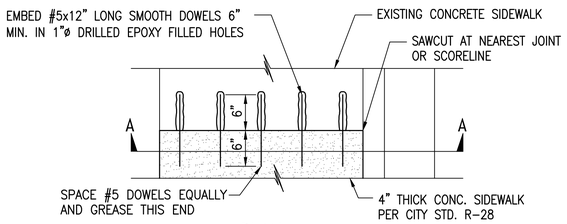


PLAN

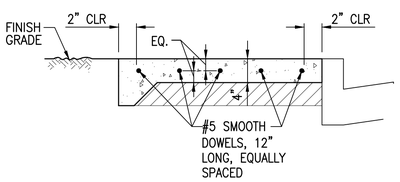


SECTION "A-A"

NOTE:

1. CONTRACTOR SHALL COMPLY WITH CITY ENGINEERING AND POLICY MEMORANDUM NO. CEB-1-09 REGARDING JOINTING REQUIREMENTS FOR CONCRETE SIDEWALKS AND DRIVEWAYS.

2 / C-12 SIDEWALK CONNECTION DETAIL (CITY)

NOT TO SCALE

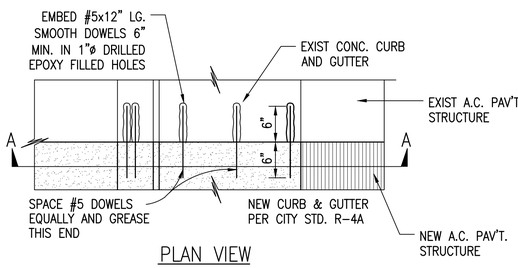


PLAN VIEW

3 / C-12 CURB AND GUTTER CONNECTION DETAIL (CITY)

NOT TO SCALE

APPROVED:

CHIEF, CIVIL ENGINEERING BRANCH, D.P.P.
CITY & COUNTY OF HONOLULU

DATE

WILSON OKAMOTO CORPORATION
1907 South Beretania Street Suite 400
Honolulu, Hawaii, U.S.A. 96826
PH 808-946-2277 FX 808-946-2253
www.wilsonokamoto.com

PROJECT ID
QUEEN ST/ WAIMANU ST CROSSWALK IMPROVEMENTS PHASE 2
HONOLULU, HAWAII

*PREPARED FOR*
HAWAII COMMUNITY DEVELOPMENT AUTHORITY

CONSULTANT

FOR COORDINATION PURPOSES ONLY

NOT TO BE USED FOR CONSTRUCTION

| | |
|---|---|
| DESIGNED BY: CD | SUPERVISED BY: CL |
| DRAWN BY: CD | CHECKED BY: CL |
| CAD FILE: | PROJECT NO.: 10736-01 |
| SCALE: AS NOTED | DATE: JULY 19, 2023 |

| REV | DATE | DESCRIPTION |
|---|---|---|

SHEET TITLE
MISCELLANEOUS DETAILS 1

DRAWING NO.
C-12

## ANCHOR POSTS NOTES

1. KEEP INSIDE OF 2-1/4" ANCHOR POST FREE FROM IMPEDIMENTS THAT MAY PREVENT PROPER SEATING OF 2" SIGN POST.
2. SQUARE TUBING SIGN POST SHALL BE TELESCOPING TYPE WITH 7/16" DIA. HOLES AT 1" O.C. ON FOUR SIDES.
3. USE 5/16" X 2-3/4" BOLTS TO SECURE THE SQUARE TUBING POST ONTO THE 2-1/4" SQUARE TUBE ANCHOR POST.

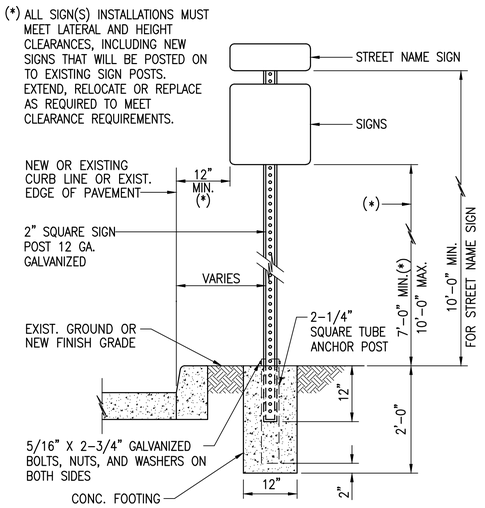


1 C-13 INSTALLATION OF NEW OR RELOCATED POST WITH CONCRETE FOOTING

SCALE: NONE

## ANCHOR POSTS NOTES

1. KEEP INSIDE OF 2-1/4" ANCHOR POST FREE FROM IMPEDIMENTS THAT MAY PREVENT PROPER SEATING OF 2" SIGN POST.
2. SQUARE TUBING SIGN POST SHALL BE TELESCOPING TYPE WITH 7/16" DIA. HOLES AT 1" O.C. ON FOUR SIDES.
3. USE 5/16" X 2-3/4" BOLTS TO SECURE THE SQUARE TUBING POST ONTO THE 2-1/4" SQUARE TUBE ANCHOR POST.
4. MINIMUM BURY DEPTH FOR THE 2-1/4" ANCHOR POST SHALL BE AS FOLLOWS:
   4'-0" MIN. AT POOR SOIL CONDITIONS
   2'-6" MIN. AT ROCKY CONDITIONS

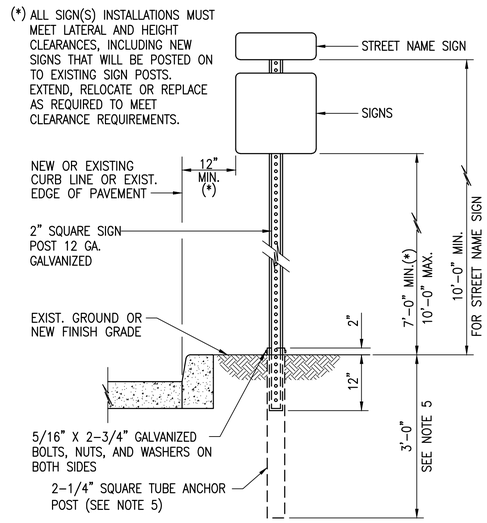


2 C-13 INSTALLATION OF NEW OR RELOCATED SIGN POST WITH ANCHOR POST, WITHOUT CONCRETE FOOTING

SCALE: NONE

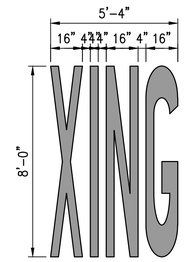


3 C-13 PAVEMENT WORD DETAILS

NOT TO SCALE

NOTE: PAVEMENT MARKINGS SHALL CONFORM TO THE LATEST EDITION OF THE FEDERAL HIGHWAY ADMINISTRATION PUBLICATION "MANUAL ON UNIFORM TRAFFIC CONTROL DEVICES" AND THE CITY & COUNTY OF HONOLULU PUBLICATION, "TRAFFIC STANDARDS MANUAL, DEPARTMENT OF TRANSPORTATION SERVICES" AND ITS AMENDMENTS.

**APPROVED:**

CHIEF, CIVIL ENGINEERING BRANCH, D.P.P. — DATE
CITY & COUNTY OF HONOLULU

CHIEF, TRAFFIC REVIEW BRANCH, D.P.P. — DATE
CITY & COUNTY OF HONOLULU


WILSON OKAMOTO CORPORATION
1907 South Beretania Street Suite 400
Honolulu, Hawaii, U.S.A. 96826
PH 808-946-2277 FX 808-946-2253
www.wilsonokamoto.com


PROJECT ID
QUEEN ST/ WAIMANU ST CROSSWALK IMPROVEMENTS PHASE 2
HONOLULU, HAWAII

*PREPARED FOR*
HAWAII COMMUNITY DEVELOPMENT AUTHORITY

CONSULTANT

FOR COORDINATION PURPOSES ONLY

NOT TO BE USED FOR CONSTRUCTION

| | |
|---|---|
| DESIGNED BY: CD | SUPERVISED BY: CL |
| DRAWN BY: CD | CHECKED BY: CL |
| CAD FILE: | PROJECT NO.: 10736-01 |
| SCALE: AS NOTED | DATE: JULY 19, 2023 |

| REV | DATE | DESCRIPTION |
|---|---|---|

SHEET TITLE
MISCELLANEOUS DETAILS 2

DRAWING NO.
C-13

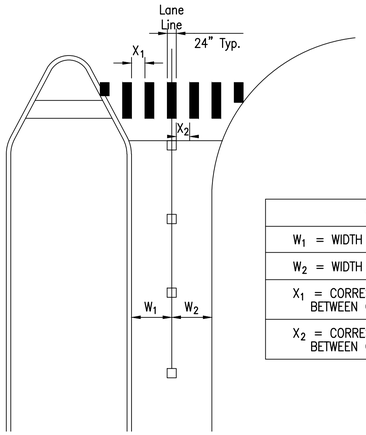


| *TABLE 2 |
|---|
| $W_1$ = WIDTH OF LANE 1 |
| $W_2$ = WIDTH OF LANE 2 |
| $X_1$ = CORRESPONDING DISTANCE BETWEEN CROSSWALK BARS |
| $X_2$ = CORRESPONDING DISTANCE BETWEEN CROSSWALK BARS |

TYPICAL MEDIAN MULTILANE

INTENT - SPACING OF LINES SELECTED TO AVOID WHEEL PATH

CONTROLLED INTERSECTION CROSSWALK DETAIL

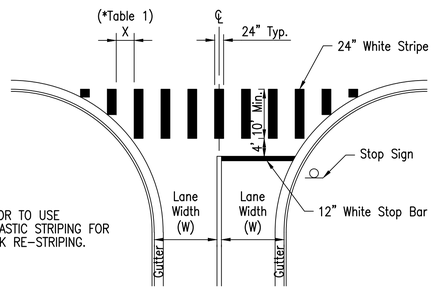


NOTE:
1. CONTRACTOR TO USE THERMOPLASTIC STRIPING FOR CROSSWALK RE-STRIPING.

| *TABLE 1 | |
|---|---|
| LANE WIDTH (W) | X (DISTANCE BETWEEN CROSSWALK BARS) |
| < 12' | 3' |
| 12'-14' | 4' |
| 15'-17' | 5' |
| > 17' | 3' |

1 / C-14 CROSSWALK DETAIL
NOT TO SCALE

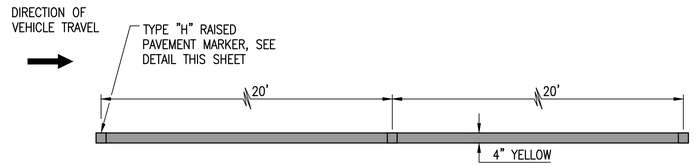


NOTE:
TYPE H (REFLECTIVE SURFACE FACING ONCOMING TRAFFIC)

2 / C-14 4" SOLID YELLOW STRIPE W/ TYPE "H" RPMs
SCALE: NONE

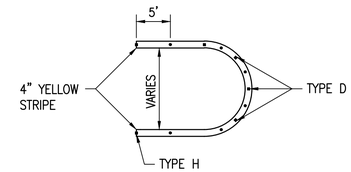


NOTE:
TYPE H (REFLECTIVE SURFACE FACING ONCOMING TRAFFIC)

3 / C-14 MEDIAN NOSE DELINEATION
SCALE: NONE

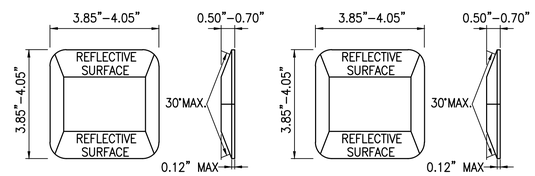


TYPE D
TWO-WAY YELLOW REFLECTIVE MARKER

TYPE H
ONE-WAY YELLOW REFLECTIVE MARKER

4 / C-14 PAVEMENT MARKER DETAILS
NOT TO SCALE

APPROVED:

CHIEF, TRAFFIC REVIEW BRANCH, D.P.P.
CITY & COUNTY OF HONOLULU
DATE


WILSON OKAMOTO CORPORATION
1907 South Beretania Street Suite 400
Honolulu, Hawaii, U.S.A. 96826
PH 808-946-2277 FX 808-946-2253
www.wilsonokamoto.com


PROJECT ID
QUEEN ST/ WAIMANU ST CROSSWALK IMPROVEMENTS PHASE 2
HONOLULU, HAWAII

*PREPARED FOR*
HAWAII COMMUNITY DEVELOPMENT AUTHORITY

CONSULTANT

FOR COORDINATION PURPOSES ONLY

NOT TO BE USED FOR CONSTRUCTION

| | |
|---|---|
| DESIGNED BY: CD | SUPERVISED BY: CL |
| DRAWN BY: CD | CHECKED BY: CL |
| CAD FILE: | PROJECT NO.: 10736-01 |
| SCALE: AS NOTED | DATE: JULY 19, 2023 |

| REV | DATE | DESCRIPTION |
|---|---|---|

SHEET TITLE
MISCELLANEOUS DETAILS 3

DRAWING NO.
C-14

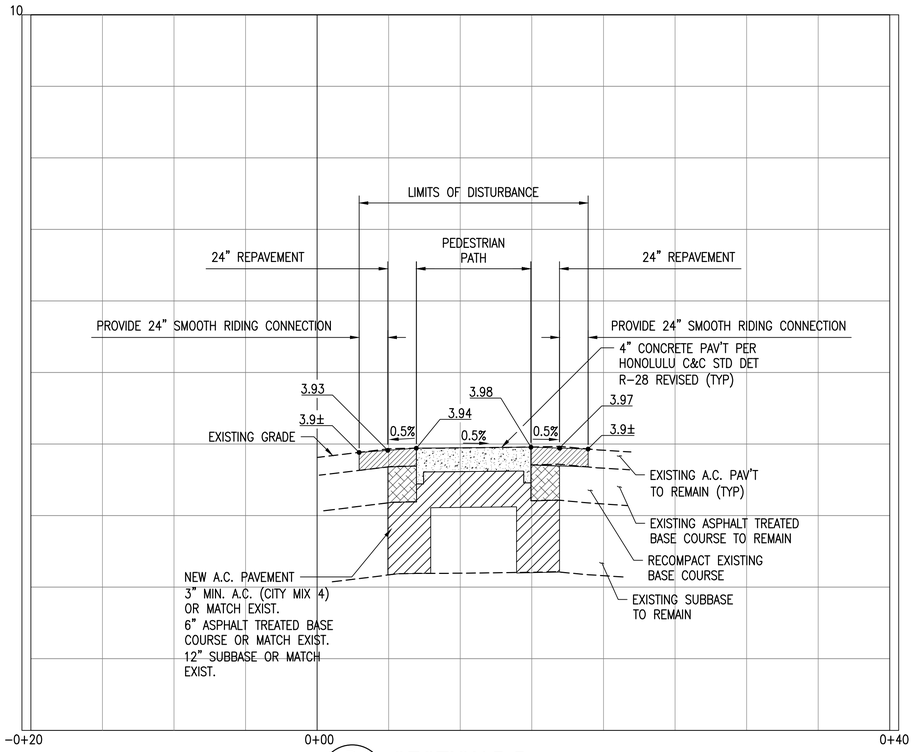


B / C-15 SECTION B-B
SCALE : 1"=5' (HORIZ.)
1"=1' (VERT.)

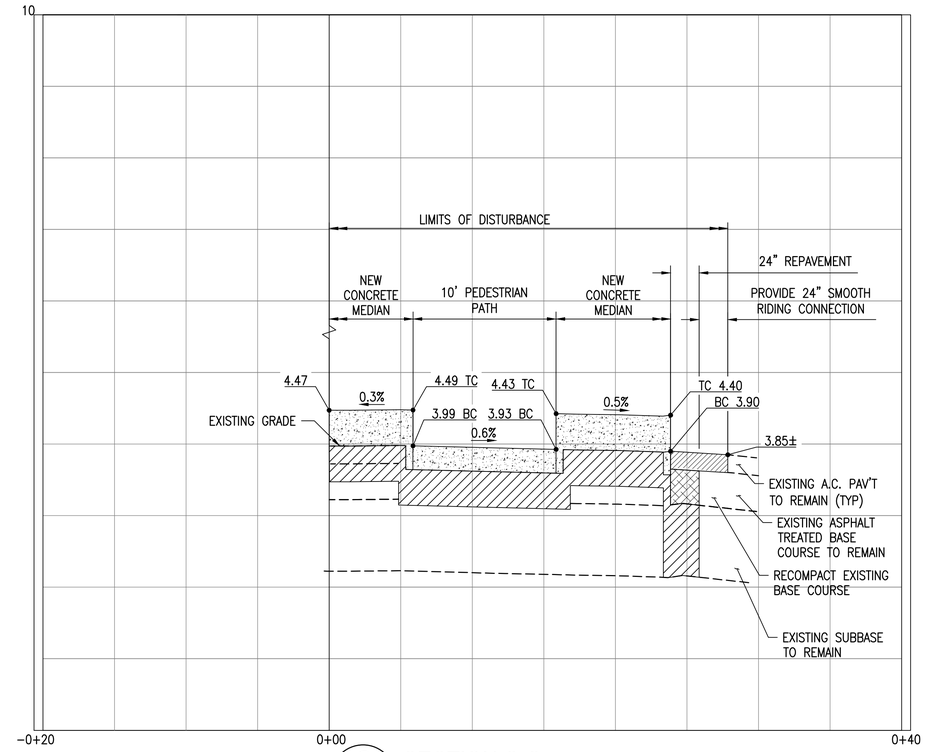


C / C-15 SECTION C-C
SCALE : 1"=5' (HORIZ.)
1"=1' (VERT.)

GRAPHIC SCALE:

5 2.5 0 5 10
HORIZ. SCALE: 1" = 5'

1 0.5 0 1 2
VERT. SCALE: 1" = 1'

APPROVED:

CHIEF, CIVIL ENGINEERING BRANCH, D.P.P.
CITY & COUNTY OF HONOLULU

DATE

WILSON OKAMOTO CORPORATION
1907 South Beretania Street Suite 400
Honolulu, Hawaii, U.S.A. 96826
PH 808-946-2277 FX 808-946-2253
www.wilsonokamoto.com

PROJECT ID
QUEEN ST/ WAIMANU ST CROSSWALK IMPROVEMENTS PHASE 2
HONOLULU, HAWAII

*PREPARED FOR*
HAWAII COMMUNITY DEVELOPMENT AUTHORITY

CONSULTANT

FOR COORDINATION PURPOSES ONLY

NOT TO BE USED FOR CONSTRUCTION

| | |
|---|---|
| DESIGNED BY: CD | SUPERVISED BY: CL |
| DRAWN BY: CD | CHECKED BY: CL |
| CAD FILE: | PROJECT NO.: 10736-01 |
| SCALE: AS NOTED | DATE: JULY 19, 2023 |

| REV | DATE | DESCRIPTION |
|---|---|---|

SHEET TITLE
SECTIONS

DRAWING NO.
C-15

## GENERAL TRAFFIC SIGNAL NOTES

1. ALL TRAFFIC SIGNAL WORK SHALL CONFORM TO THE REQUIREMENTS OF THE MANUAL ON UNIFORM TRAFFIC CONTROL DEVICES FOR STREETS AND HIGHWAYS, U.S. DEPARTMENT OF TRANSPORTATION, FEDERAL HIGHWAYS ADMINISTRATION, LATEST EDITION, AND AMENDMENTS.

2. THE LOCATIONS OF THE TRAFFIC SIGNAL STANDARDS, TRAFFIC SIGNAL STANDARDS WITH MAST ARM, PEDESTRIAN PUSH BUTTONS, TRAFFIC CONTROLLER, TRANSFORMER, PULLBOXES, CONDUITS, & LOOP DETECTORS SHALL BE STAKED OUT IN THE FIELD BY THE CONTRACTOR AND LOCATIONS ACCEPTED BY THE ENGINEER PRIOR TO CONSTRUCTION AND INSTALLATION. LOCATIONS SHOWN ON PLANS SHALL BE ADJUSTED AS NECESSARY TO PREVENT CONFLICT WITH EXISTING OR NEW FACILITIES.

3. ALL CONDUITS SHALL BE PVC SCHEDULE 80.

4. EXISTING PAVEMENT SHALL BE RESTORED ACCORDING TO RESTORATION OF NON-ROADWAY AREAS DUE TO TRENCH EXCAVATION DETAIL SHOWN ON THE PLANS.

5. DEPARTMENT OF TRANSPORTATION SERVICES, CITY & COUNTY OF HONOLULU WILL ASSIST THE ENGINEER IN CONSTRUCTION INSPECTION FOR THE TRAFFIC SIGNAL SYSTEM. THE FOLLOWING WORK IS TO BE PERFORMED BY THE DEPARTMENT OF TRANSPORTATION SERVICES, CITY & COUNTY OF HONOLULU AS NECESSARY.

   A. TEST CONTROLLER & AUXILIARY EQUIPMENT IN CABINET.
   B. MAKE ALL ELECTRICAL EQUIPMENT CONNECTIONS IN THE FIELD FOR SIGNAL SYSTEM AFTER THE SYSTEM HAS BEEN INSTALLED IN PLACE BY THE CONTRACTOR.
   C. FINAL ADJUSTMENT OF TRAFFIC SIGNAL CONTROL EQUIPMENT

6. STEEL PLATES FOR COVERING TRENCHES SHALL HAVE SKID RESISTANT SURFACE.

7. ALL STRUCTURES, PAVEMENTS, UTILITIES, LANDSCAPING, AND OTHER TOPOGRAPHICAL FEATURES SHOWN ON THE PLANS ARE EXISTING AND SHALL REMAIN UNLESS NOTED OR INDICATED OTHERWISE. ALL GRASSED AREAS DAMAGED BY CONSTRUCTION ACTIVITIES SHALL BE TOPSOILED AND GRASSED.

8. A SOLID #8 BARE COPPER WIRE SHALL BE PULLED IN ALL CONDUITS WITH THE TRAFFIC CONTROL CABLE FOR EQUIPMENT GROUND. COST SHALL BE CONSIDERED INCIDENTAL TO THE INSTALLATION OF THE SIGNAL CONTROL CABLE.

9. ALL SPLICING SHALL BE DONE IN THE PULLBOXES.

10. THE CONTRACTOR SHALL NOTIFY THE TRAFFIC SIGNALS AND TECHNOLOGY DIVISION, DEPARTMENT OF TRANSPORTATION SERVICES, THREE (3) WORKING DAYS PRIOR TO COMMENCING WORK ON THE TRAFFIC SIGNAL SYSTEM (PHONE: 768-8387).

11. A 3'X5' LEVEL AREA SHALL BE PROVIDED ALONG SIDE PEDESTRIAN PUSH BUTTON ASSEMBLIES AT A DISTANCE NOT TO EXCEED 10'-0". THIS WORK WILL NOT BE MEASURED OR PAID FOR SEPARATELY, BUT SHALL BE CONSIDERED INCIDENTAL TO THE VARIOUS CONTRACT ITEMS.

12. THE CONTRACTOR SHALL VERIFY WITH THE RESPECTIVE UTILITY COMPANIES AND GOVERNMENT AGENCIES, THE LOCATIONS OF ALL ELECTRIC, TELEPHONE, TRAFFIC SIGNAL, STREET LIGHT, CABLE TELEVISION, FIRE ALARM, GAS, WATER, SEWER, DRAIN AND OTHER LINES CROSSING THE EXCAVATION PATH OR IN EXCAVATION AREAS.

13. ALL WORK AND MATERIALS FOR THE TRAFFIC SIGNAL SYSTEM SHALL CONFORM TO SECTION 623 – TRAFFIC SIGNAL SYSTEM, OF THE CURRENT HAWAII STANDARD SPECIFICATION FOR ROAD AND BRIDGE CONSTRUCTION – 2005 OF THE HAWAII STATE DEPARTMENT OF TRANSPORTATION, EXCEPT AS OTHERWISE PROVIDED ON THE PLANS OR IN THE SPECIAL PROVISIONS.

14. PROVIDE GROUND ROD IN ALL PULLBOXES ADJACENT TO SIGNAL STANDARDS, PEDESTALS, CONTROLLER CABINETS, AND OTHER LOCATIONS ORDERED BY THE ENGINEER. GROUND ROD CONNECTORS SHALL BE COPPER WELDED AND SHALL MEET GROUND TO EARTH RESISTANCE AS SPECIFIED BY THE NATIONAL ELECTRIC CODE OR LOCAL INSPECTING AGENCY. FURNISHING AND INSTALLING GROUND RODS WILL NOT BE MEASURED OR PAID FOR SEPARATELY, BUT SHALL BE CONSIDERED INCIDENTAL TO THE VARIOUS CONTRACT ITEMS.

15. LANE CLOSURES SHALL BE ALLOWED ONLY DURING THE WORKING HOURS FROM 8:30 AM TO 3:00 PM, MONDAY THROUGH FRIDAY.

16. UNDERGROUND PIPES, CABLES, OR DUCTLINES KNOWN TO EXIST ARE INDICATED ON THE PLANS. THE CONTRACTOR SHALL VERIFY THE LOCATIONS AND DEPTHS OF THE FACILITIES AND EXERCISE PROPER CARE IN EXCAVATING IN THE AREA. WHEREVER CONNECTIONS OF NEW UTILITIES TO EXISTING UTILITIES ARE SHOWN ON THE PLANS, THE CONTRACTOR SHALL EXPOSE THE EXISTING LINES AT THE PROPOSED CONNECTIONS TO VERIFY THEIR LOCATIONS AND DEPTHS PRIOR TO EXCAVATION FOR THE NEW LINES.

17. NO MATERIAL AND/OR EQUIPMENT SHALL BE STOCKPILED OR OTHERWISE STORED WITHIN THE STREET RIGHTS-OF-WAY EXCEPT AT LOCATIONS DESIGNATED IN WRITING AND ACCEPTED BY THE ENGINEER.

18. TRAFFIC SIGNAL SUPPORTS SHALL MEET THE REQUIREMENTS OF "AASHTO STANDARD SPECIFICATIONS FOR STRUCTURAL SUPPORTS FOR HIGHWAY SIGNS, LUMINAIRES, AND TRAFFIC SIGNALS, 1994, WITH SUBSEQUENT REVISIONS." WIND SPEED SHALL BE 105 MPH.

## TRAFFIC NOTES FOR WORK ON CITY & COUNTY STREETS

1. A PERMIT SHALL BE OBTAINED FROM THE DEPARTMENT OF TRANSPORTATION SERVICES BEFORE WORK ON ANY PORTION OF A PUBLIC STREET OR HIGHWAY MAY BEGIN. CONSTRUCTION TRAFFIC CONTROL PLANS APPROVED BY THE DEPARTMENT OF TRANSPORTATION SERVICES AND/OR THE DEPARTMENT OF PLANNING AND PERMITTING MUST BE PROVED WHEN APPLYING FOR THE PERMIT.

2. THE CONTRACTOR SHALL PROVIDE, INSTALL, AND MAINTAIN ALL NECESSARY SIGNS AND OTHER PROTECTIVE FACILITIES, WHICH SHALL CONFORM WITH THE "HAWAII ADMINISTRATION RULES GOVERNING THE USE OF TRAFFIC CONTROL DEVICES AT WORK SITES ON OR ADJACENT TO PUBLIC STREETS AND HIGHWAYS" ADOPTED BY THE DIRECTOR OF TRANSPORTATION, AND THE CURRENT U.S. FEDERAL HIGHWAYS ADMINISTRATION'S "MANUAL ON UNIFORM TRAFFIC CONTROL DEVICES FOR STREETS AND HIGHWAY, PART VI – TRAFFIC CONTROLS FOR STREET AND HIGHWAY CONSTRUCTION AND MAINTENANCE OPERATIONS."

3. WORK ON ANY CITY STREET AREA MAY BE PERFORMED ONLY BETWEEN THE HOURS OF 8:30 A.M. TO 3:30 P.M., MONDAY THROUGH FRIDAY, UNLESS OTHERWISE PERMITTED BY THE DEPARTMENT OF TRANSPORTATION SERVICES.

4. DURING WORKING HOURS, THE CONTRACTOR SHALL PROVIDE FOR THROUGH TRAFFIC. DURING NON-WORKING HOURS, ALL TRENCHES SHALL BE COVERED WITH A SAFE NON-SKID BRIDGING MATERIAL AND ALL LANES SHALL BE OPEN TO THE TRAFFIC.

5. AS REQUIRED BY THE HAWAII DEPARTMENT OF TRANSPORTATION SERVICES, THE CONTRACTOR SHALL PROVIDE OFF-DUTY POLICE OFFICERS TO CONTROL THE FLOW OF TRAFFIC.

6. WHERE PEDESTRIAN WALKWAYS EXIST, THEY SHALL BE MAINTAINED IN PASSABLE CONDITION OR OTHER FACILITIES FOR PEDESTRIANS SHALL BE PROVIDED. PASSAGE BETWEEN WALKWAYS AT INTERSECTIONS SHALL LIKEWISE BE PROVIDED.

7. DRIVEWAYS SHALL BE KEPT OPEN UNLESS THE OWNERS OF THE PROPERTY USING THESE RIGHTS-OF-WAY ARE OTHERWISE PROVIDED FOR SATISFACTORILY.

8. CONTRACTOR SHALL REFERENCE TO THE APPROVAL OF THE DEPARTMENT OF TRANSPORTATION SERVICES AND THE DEPARTMENT OF PLANNING AND PERMITTING, ALL EXISTING TRAFFIC SIGNS, POSTS, AND PAVEMENT MARKINGS PRIOR TO THE COMMENCEMENT OF CONSTRUCTION. THE CONTRACTOR SHALL REPLACE OR REPAIR ALL TRAFFIC SIGNS, POSTS AND PAVEMENT MARKINGS DISTURBED BY HIS ACTIVITIES.

9. THE CONTRACTOR SHALL NOTIFY THE DEPARTMENT OF PLANNING AND PERMITTING AT 768-8084 ONE (1) WEEK PRIOR TO ANY WORK TO BE DONE ON SIGNS, POSTS AND PAVEMENT MARKINGS.

10. NO EQUIPMENT SHALL BE STORED WITHIN STREET RIGHTS-OF-WAY EXCEPT AT LOCATIONS DESIGNATED IN WRITING AND APPROVED BY THE DEPARTMENT OF TRANSPORTATION SERVICES.

11. WARD MANAGEMENT DEVELOPMENT, LLC SHALL ENSURE THAT THE CONTRACTOR INSTALLS THE CONSTRUCTION TRAFFIC CONTROL DEVICES IN ACCORDANCE WITH THE MUTCD AND THE HAWAII ADMINISTRATION RULES AS SPECIFIED IN TRAFFIC NOTE #2.

## TRAFFIC SIGNALS AND TECHNOLOGY DIVISION NOTES

1. THE CONTRACTOR SHALL NOTIFY THE TRAFFIC SIGNAL AND TECHNOLOGY DIVISION, DEPARTMENT OF TRANSPORTATION SERVICES, THREE (3) WORKING DAYS PRIOR TO COMMENCING WORK ON THE TRAFFIC SIGNAL SYSTEM (PHONE: 768-8387)

2. THE TRAFFIC SIGNAL SYSTEM SHALL BE KEPT OPERATIONAL DURING CONSTRUCTION. ANY RELOCATION REQUIRED SHALL BE APPROVED BY THE TRAFFIC SIGNALS AND TECHNOLOGY DIVISION, DEPARTMENT OF TRANSPORTATION SERVICES, AND PAID FOR BY THE CONTRACTOR.

3. THE CONTRACTOR SHALL BE RESPONSIBLE FOR ANY DAMAGES TO THE EXISTING TRAFFIC SIGNAL FACILITIES, INCLUDING BUT NOT LIMITED TO THE TRAFFIC SIGNAL FIBER OPTIC CABLE SYSTEM AND INTERCONNECT SYSTEM. ANY AND ALL DAMAGES TO THE FACILITIES SHALL BE REPAIRED BY THE CONTRACTOR AT THEIR COST IN ACCORDANCE WITH THE REQUIREMENTS OF THE TRAFFIC SIGNALS AND TECHNOLOGY DIVISION, DEPARTMENT OF TRANSPORTATION SERVICES.

## LEGEND

| | |
|---|---|
| —D18— | EXISTING UTILITY LINES AND SIZES AS INDICATED |
| | EXISTING PULLBOX |
| | NEW PULLBOX |
| → | NEW PEDESTRIAN PUSH BUTTON |
| | NEW STEEL POLE |
| | NEW RECTANGULAR RAPID FLASHING BEACON |

APPROVED

CHIEF, TRAFFIC REVIEW BRANCH, DPP — DATE
CITY AND COUNTY OF HONOLULU

CHIEF, TRAFFIC SIGNALS AND TECHNOLOGY DIVISION, DTS — DATE
CITY AND COUNTY OF HONOLULU


WILSON OKAMOTO CORPORATION
1907 South Beretania Street Suite 400
Honolulu, Hawaii, U.S.A. 96826
PH 808-946-2277 FX 808-946-2253
www.wilsonokamoto.com


PROJECT ID
QUEEN ST/ WAIMANU ST CROSSWALK IMPROVEMENTS PHASE 2
HONOLULU, HAWAII

*PREPARED FOR*
HAWAII COMMUNITY DEVELOPMENT AUTHORITY

CONSULTANT

FOR COORDINATION PURPOSES ONLY

NOT TO BE USED FOR CONSTRUCTION

| | |
|---|---|
| DESIGNED BY: CD | SUPERVISED BY: CL |
| DRAWN BY: CD | CHECKED BY: CL |
| CAD FILE: | PROJECT NO.: 10736-01 |
| SCALE: AS NOTED | DATE: JULY 19, 2023 |

| REV | DATE | DESCRIPTION |
|---|---|---|

SHEET TITLE
TRAFFIC SIGNAL NOTES AND LEGEND

DRAWING NO.
**TS-01**

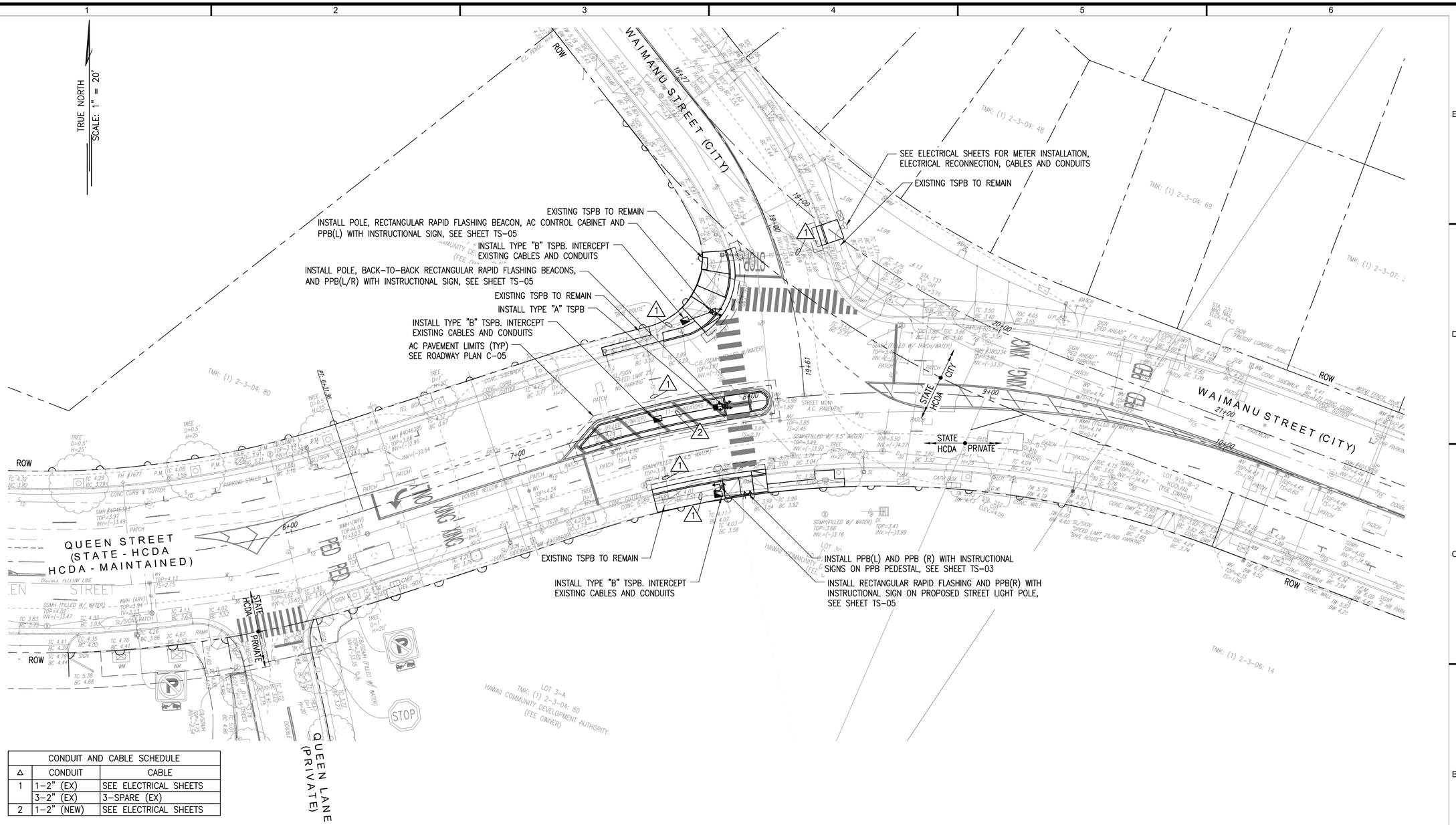


| CONDUIT AND CABLE SCHEDULE | | |
|---|---|---|
| △ | CONDUIT | CABLE |
| 1 | 1-2" (EX) | SEE ELECTRICAL SHEETS |
| | 3-2" (EX) | 3-SPARE (EX) |
| 2 | 1-2" (NEW) | SEE ELECTRICAL SHEETS |

## NOTES:

1. PRIOR TO INSTALLING THE PULLBOXES, THE CONTRACTOR SHALL LEVEL THE BOTTOM OF THE TRENCH AND ACHIEVE A MINIMUM OF 95% RELATIVE COMPACTION OF THE BOTTOM OF THE TRENCH.
2. SEE ELECTRICAL SHEETS FOR ELECTRICAL CABLES.

## GRAPHIC SCALE:

10 5 0 10 20

SCALE: 1" = 10'

## TRAFFIC SIGNAL PLAN 2

SCALE : 1"=20'

## APPROVED

CHIEF, TRAFFIC REVIEW BRANCH, DPP
CITY AND COUNTY OF HONOLULU — DATE

CHIEF, TRAFFIC SIGNALS AND TECHNOLOGY DIVISION, DTS
CITY AND COUNTY OF HONOLULU — DATE

CHIEF, CIVIL ENGINEERING BRANCH, D.P.P.
CITY & COUNTY OF HONOLULU — DATE

WILSON OKAMOTO CORPORATION
1907 South Beretania Street Suite 400
Honolulu, Hawaii, U.S.A. 96826
PH 808-946-2277 FX 808-946-2253
www.wilsonokamoto.com

PROJECT ID
QUEEN ST/ WAIMANU ST CROSSWALK IMPROVEMENTS PHASE 2
HONOLULU, HAWAII

*PREPARED FOR*
HAWAII COMMUNITY DEVELOPMENT AUTHORITY

CONSULTANT

FOR COORDINATION PURPOSES ONLY

NOT TO BE USED FOR CONSTRUCTION

| | |
|---|---|
| DESIGNED BY: CD | SUPERVISED BY: CL |
| DRAWN BY: CD | CHECKED BY: CL |
| CAD FILE: | PROJECT NO.: 10736-01 |
| SCALE: AS NOTED | DATE: JULY 19, 2023 |

| REV | DATE | DESCRIPTION |
|---|---|---|

SHEET TITLE
TRAFFIC SIGNAL PLAN

DRAWING NO.
**TS-02**

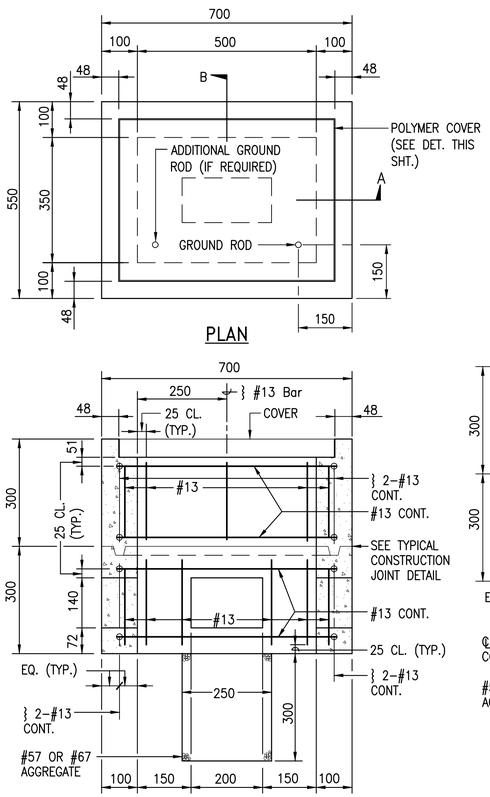


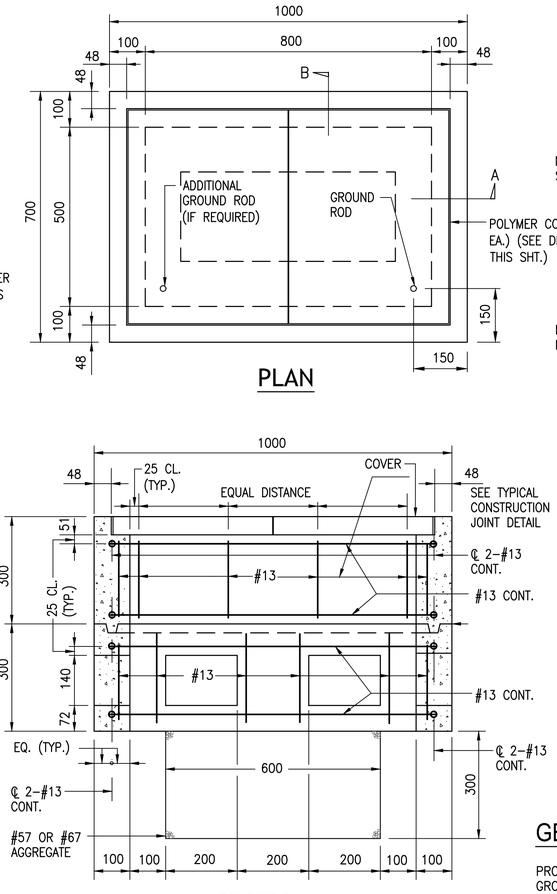


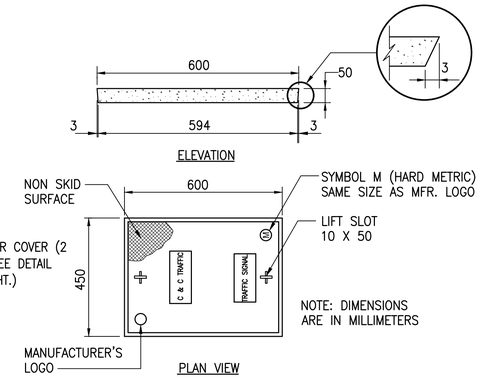


POLYMER CONCRETE COVER

SCALE: NOT TO SCALE

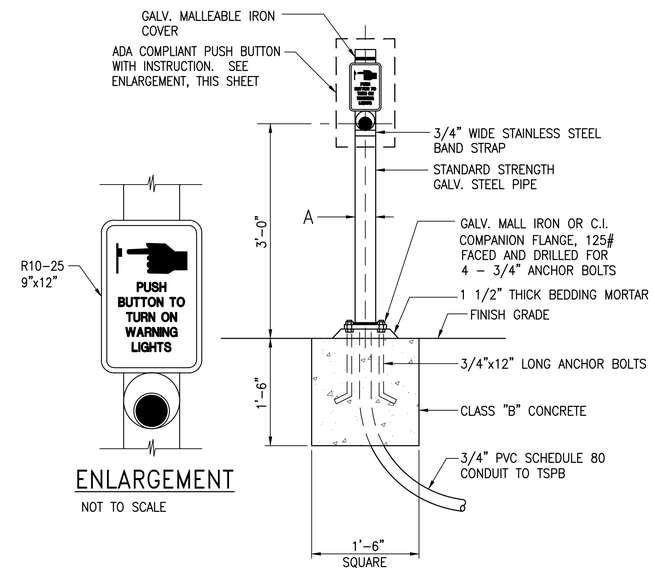


ENLARGEMENT

NOT TO SCALE

**NOTES:**

1. CONDUITS SHALL PROTRUDE 2" MAX. ABOVE FINISHED SURFACE OF FOUNDATION.
2. CONDUITS SHALL SLOPE AWAY FROM POST FOUNDATION.

3 / TS-03 PPB POST AND FOOTING DETAIL

SCALE: NOT TO SCALE

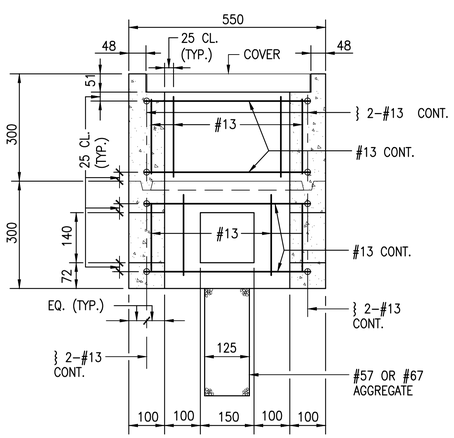


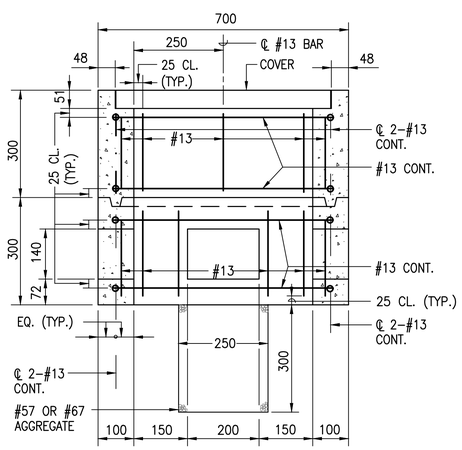


1 / TS-03 TYPE "A" PULLBOX (OLD TYPE "B")

SCALE: NONE

2 / TS-03 TYPE "B" PULLBOX (OLD TYPE "C")

NOT TO SCALE

## GENERAL NOTES:

PROVIDE A MINIMUM OF ONE 16ø X 2.5m COPPERWELD GROUND ROD IN EACH PULLBOX. WHEN DIRECTED BY THE TRAFFIC SIGNAL INSPECTOR/ENGINEER, INSTALL ADDITIONAL GROUND RODS. COST OF GROUND RODS SHALL BE INCIDENTAL TO THE PULLBOXES.

ALL PRE-CAST CONCRETE PULLBOXES SHALL BE MANUFACTURED IN TWO PIECES.

THE PULLBOX WITH COVER SHALL BE CAPABLE OF SUPPORTING AN MS 18 LOADING.

THE MAXIMUM WEIGHT OF THE PULLBOX COVER SHALL NOT EXCEED 27 KILOGRAMS.

THE OPENINGS FOR THE CONDUITS ON ALL PULLBOXES SHALL BE PRE-CAST CONCRETE KNOCKOUTS.

AFTER INSTALLING THE CONDUITS IN THE OPENINGS OF THE PULLBOXES, THE CONTRACTOR SHALL FILL THE EXCESS OPENING IN THE PRE-CAST KNOCKOUTS WITH CONCRETE MORTAR.

PRIOR TO INSTALLING THE PULLBOXES, THE CONTRACTOR SHALL LEVEL THE BOTTOM OF THE TRENCH AND ACHIEVE A MINIMUM OF 95% RELATIVE COMPACTION OF THE BOTTOM OF THE TRENCH.

ALL CONCRETE SHALL BE CLASS A (21MPa (3,000 psi), MIN.)

REBARS SHALL BE GRADE 300 AND ALL LAPPED SPLICES SHALL BE 360mm MINIMUM.

THE #57 OR #67 SIZE AGGREGATE SHALL CONFORM TO LATEST VERSION OF AASHTO M43 (ASTM D 448).

TYPE "C" PULLBOX SHALL BE INSTALLED IN A LOCATION PROTECTED FROM VEHICULAR TRAFFIC (I.E. RAISED SIDEWALK, BEHIND A.C. CURBS, TRAFFIC SIGNAL STANDARD OR PIPE GUARDS).

DIMENSIONS ARE IN MILLIMETERS, UNLESS OTHERWISE NOTED.

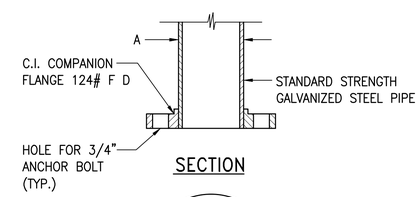


SECTION

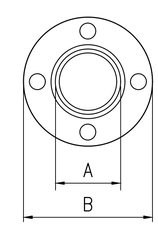


TOP VIEW

| DATA TABLE FOR PPB POST | | |
|---|---|---|
| AMOUNT OF PPB | DIMENSIONS | |
| | A | B |
| 1 | 3 1/2" | 8" |
| 2-3 | 1 1/2" | 9" |

4 / TS-03 FLANGE DETAIL

SCALE: NONE

APPROVED

CHIEF, TRAFFIC REVIEW BRANCH, DPP — DATE
CITY AND COUNTY OF HONOLULU

CHIEF, TRAFFIC SIGNALS AND TECHNOLOGY DIVISION, DTS — DATE
CITY AND COUNTY OF HONOLULU


WILSON OKAMOTO CORPORATION
1907 South Beretania Street Suite 400
Honolulu, Hawaii, U.S.A. 96826
PH 808-946-2277 FX 808-946-2253
www.wilsonokamoto.com


PROJECT ID
QUEEN ST/ WAIMANU ST CROSSWALK IMPROVEMENTS PHASE 2
HONOLULU, HAWAII

*PREPARED FOR*
HAWAII COMMUNITY DEVELOPMENT AUTHORITY

CONSULTANT

FOR COORDINATION PURPOSES ONLY

NOT TO BE USED FOR CONSTRUCTION

| DESIGNED BY: CD | SUPERVISED BY: CL |
|---|---|
| DRAWN BY: CD | CHECKED BY: CL |
| CAD FILE: | PROJECT NO.: 10736-01 |
| SCALE: AS NOTED | DATE: JULY 19, 2023 |

| REV | DATE | DESCRIPTION |
|---|---|---|

SHEET TITLE
TRAFFIC SIGNAL DETAILS 1

DRAWING NO.
**TS-03**

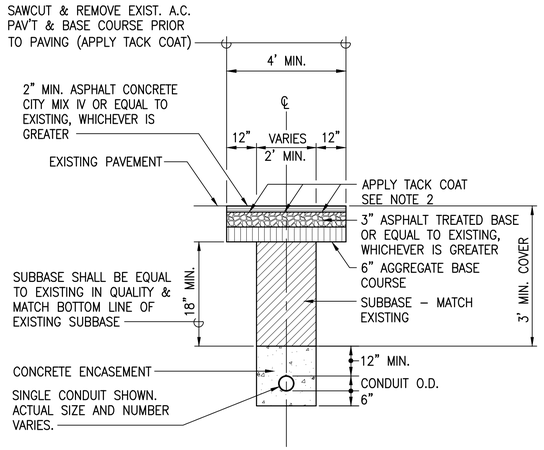


## 1 TS-04 TYPICAL ROADWAY TRENCH RESTORATION DETAIL

SCALE: NOT TO SCALE

**NOTES:**

1. PAVEMENT STRUCTURE SHALL BE EQUAL OR BETTER THAN EXISTING IN THICKNESS & QUALITY.
2. FOR ROAD GRADES 0% TO 7.99% AND TACK COAT IS NOT AVAILABLE, NONE REQUIRED. IF TACK COAT IS AVAILABLE, USE TACK COAT.
3. SEE C-11 FOR CURB & GUTTER CONNECTION DETAIL.

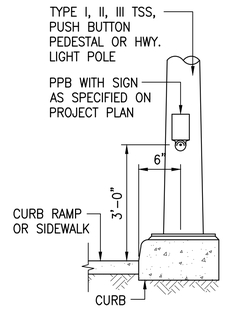


NOTE:

1. PEDESTRIAN PUSH BUTTON SHALL BE OPERABLE WITH ONE HAND AND SHALL NOT REQUIRE TIGHT GRASPING, PINCHING, OR TWISTING OF THE WRIST. THE FORCE REQUIRED TO ACTIVATE PUSH BUTTON SHALL NOT EXCEED 5 POUNDS (22.2N).

## 3 TS-04 PPB DETAIL

SCALE: NOT TO SCALE

**NOTES:**

1. DETAIL FOR MULTIPLE CONDUIT TRENCHES SHALL BE SIMILAR. PROVIDE 3" MIN. CLEAR SPACING BETWEEN CONDUITS.
2. BED COURSE MATERIAL SHALL BE BLACK SAND, BEACH SAND, CRUSHED ROCK, OR FINELY GRADED CORAL PASSING A ½" SIEVE.

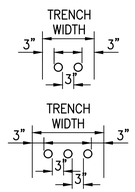


## 4 TS-04 TYPICAL TRENCH DETAIL

SCALE: NOT TO SCALE

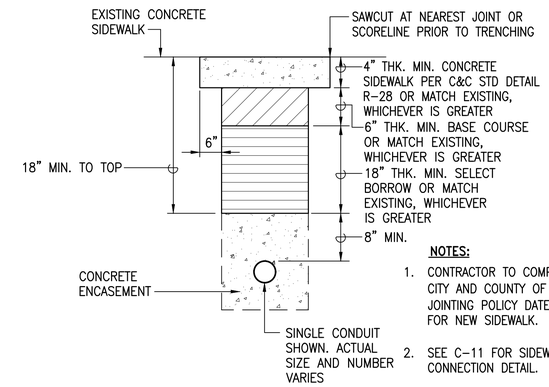


**NOTES:**

1. CONTRACTOR TO COMPLY WITH CITY AND COUNTY OF HONOLULU'S JOINTING POLICY DATED 4/06/09 FOR NEW SIDEWALK.
2. SEE C-11 FOR SIDEWALK CONNECTION DETAIL.

## 5 TS-04 TYPICAL CONCRETE SIDEWALK TRENCH RESTORATION DETAIL

SCALE: NOT TO SCALE

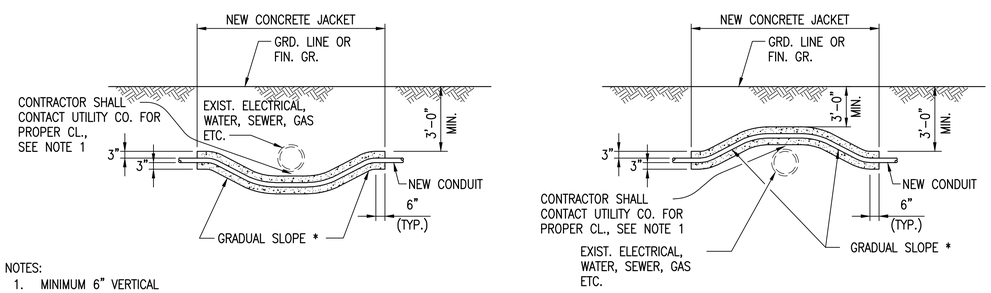


NOTES:

1. MINIMUM 6" VERTICAL CLEARANCE FROM DRAIN LINES.

* TO BE DETERMINED BY CITY ELECTRICAL INSPECTOR/ENGINEER

## 2 TS-04 CONDUIT BY-PASS DETAIL AT VARIOUS UTILITIES

SCALE: NOT TO SCALE

APPROVED

CHIEF, TRAFFIC REVIEW BRANCH, DPP — DATE
CITY AND COUNTY OF HONOLULU

CHIEF, TRAFFIC SIGNALS AND TECHNOLOGY DIVISION, DTS — DATE
CITY AND COUNTY OF HONOLULU

CHIEF, CIVIL ENGINEERING BRANCH, D.P.P. — DATE
CITY & COUNTY OF HONOLULU


WILSON OKAMOTO CORPORATION
1907 South Beretania Street Suite 400
Honolulu, Hawaii, U.S.A. 96826
PH 808-946-2277 FX 808-946-2253
www.wilsonokamoto.com


PROJECT ID
QUEEN ST/ WAIMANU ST CROSSWALK IMPROVEMENTS PHASE 2
HONOLULU, HAWAII

*PREPARED FOR*
HAWAII COMMUNITY DEVELOPMENT AUTHORITY

CONSULTANT

FOR COORDINATION PURPOSES ONLY

NOT TO BE USED FOR CONSTRUCTION

| | |
|---|---|
| DESIGNED BY: CD | SUPERVISED BY: CL |
| DRAWN BY: CD | CHECKED BY: CL |
| CAD FILE: | PROJECT NO.: 10736-01 |
| SCALE: AS NOTED | DATE: JULY 19, 2023 |

| REV | DATE | DESCRIPTION |
|---|---|---|

SHEET TITLE
TRAFFIC SIGNAL DETAILS 2

DRAWING NO.
**TS-04**

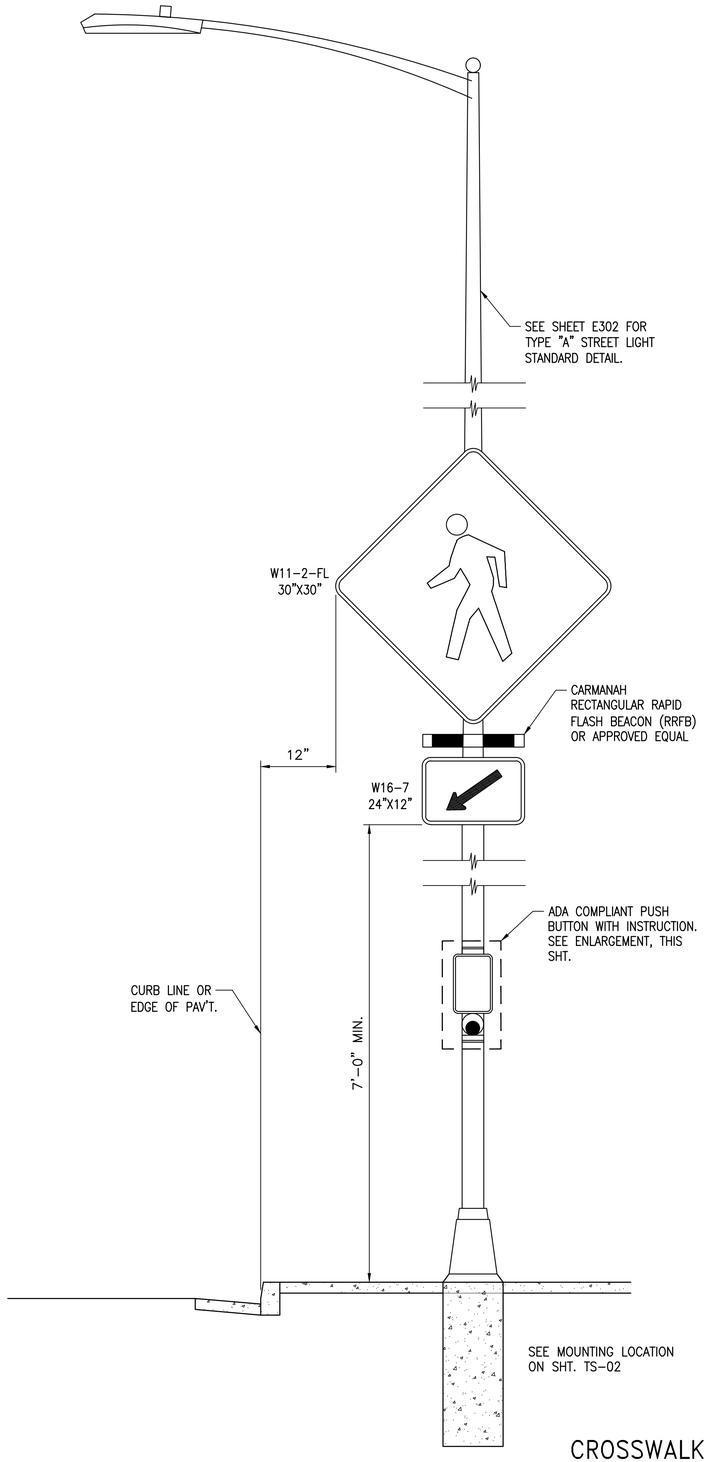


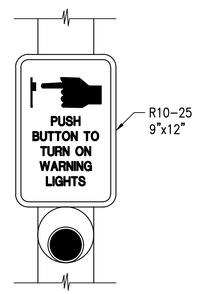


ENLARGEMENT

NOT TO SCALE

**NOTES:**

1. CONTRACTOR SHALL INSTALL SIGNS, RECTANGULAR RAPID FLASH BEACON (RRFB), AND PUSH BUTTON, PER THE MANUFACTURER'S SPECIFICATIONS. SEE ELECTRICAL DRAWINGS FOR ADDITIONAL DETAILS AND REQUIREMENTS.
2. RRFB SHALL BE APPROVED BY THE FHWA AND MUTCD. CONTRACTOR SHALL SUBMIT PRODUCT DATA TO THE ENGINEER FOR REVIEW AND APPROVAL BY THE ENGINEER AND THE C&C DEPT. OF TRANSPORTATION SERVICES PRIOR TO PURCHASING AND INSTALLATION.
3. THE RRFB INSTALLATION SHALL COMPLY WITH THE TECHNICAL CONDITIONS AS PROVIDED IN THE FHWA TECHNICAL MEMORANDUM REGARDING THE INTERIM APPROVAL FOR OPTIONAL USE OF RECTANGULAR RAPID FLASH BEACON.
4. CONTRACTOR SHALL MOUNT SINGLE, SEE SHT. TS-02, RRFB CONTROLLER BEHIND THE W11-2-FL SIGN AS INDICATED ON THIS SHEET. MOUNTING SHALL BE PER MANUFACTURER'S SPECIFICATIONS

1 / TS-05

CROSSWALK SIGNS WITH LED RECTANGULAR RAPID FLASH BEACON ON NEW STREET LIGHT POLE

SCALE: NONE

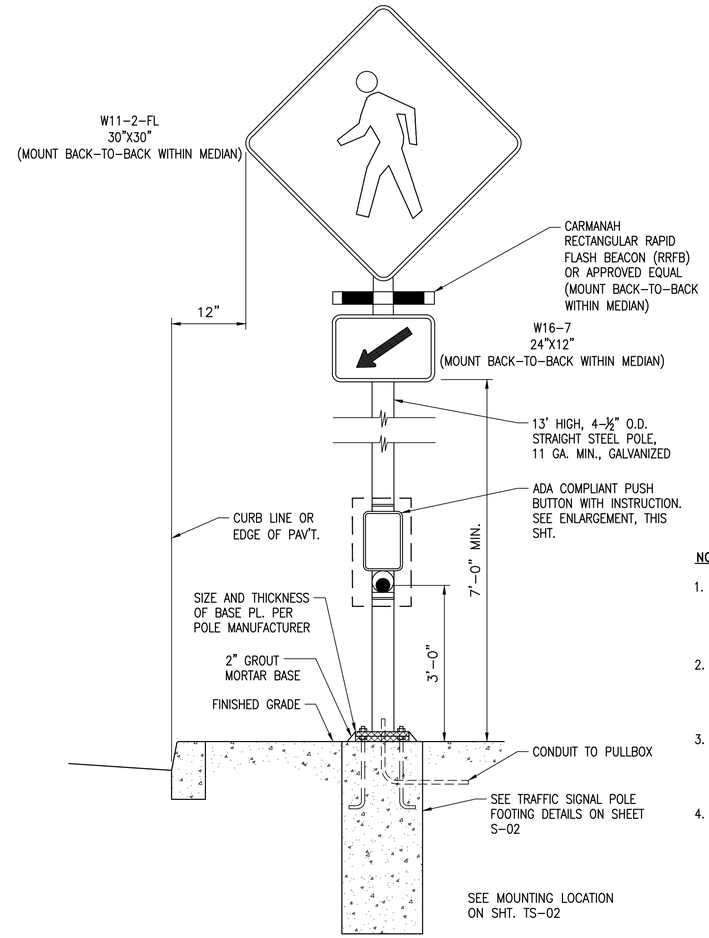


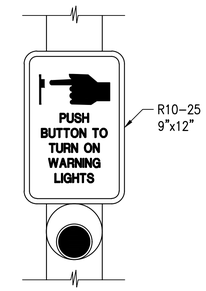


ENLARGEMENT

NOT TO SCALE

**NOTES:**

1. CONTRACTOR SHALL INSTALL SIGNS, POLES, RECTANGULAR RAPID FLASH BEACON (RRFB), AND PUSH BUTTON, PER THE MANUFACTURER'S SPECIFICATIONS. SEE ELECTRICAL DRAWINGS FOR ADDITIONAL DETAILS AND REQUIREMENTS.
2. RRFB SHALL BE APPROVED BY THE FHWA AND MUTCD. CONTRACTOR SHALL SUBMIT PRODUCT DATA TO THE ENGINEER FOR REVIEW AND APPROVAL BY THE ENGINEER AND THE C&C DEPT. OF TRANSPORTATION SERVICES PRIOR TO PURCHASING AND INSTALLATION.
3. THE RRFB INSTALLATION SHALL COMPLY WITH THE TECHNICAL CONDITIONS AS PROVIDED IN THE FHWA TECHNICAL MEMORANDUM REGARDING THE INTERIM APPROVAL FOR OPTIONAL USE OF RECTANGULAR RAPID FLASH BEACON.
4. CONTRACTOR SHALL MOUNT SINGLE OR DOUBLE, SEE SHT. TS-02, RRFB CONTROLLER BEHIND THE W11-2-FL SIGN AS INDICATED ON THIS SHEET. MOUNTING SHALL BE PER MANUFACTURER'S SPECIFICATIONS.

2 / TS-05

CROSSWALK SIGNS WITH LED RECTANGULAR RAPID FLASH BEACON

SCALE: NONE

APPROVED

CHIEF, TRAFFIC REVIEW BRANCH, DPP — DATE
CITY AND COUNTY OF HONOLULU

CHIEF, TRAFFIC SIGNALS AND TECHNOLOGY DIVISION, DTS — DATE
CITY AND COUNTY OF HONOLULU


WILSON OKAMOTO CORPORATION
1907 South Beretania Street Suite 400
Honolulu, Hawaii, U.S.A. 96826
PH 808-946-2277 FX 808-946-2253
www.wilsonokamoto.com


PROJECT ID
QUEEN ST/ WAIMANU ST CROSSWALK IMPROVEMENTS PHASE 2
HONOLULU, HAWAII

*PREPARED FOR*
HAWAII COMMUNITY DEVELOPMENT AUTHORITY

CONSULTANT

FOR COORDINATION PURPOSES ONLY

NOT TO BE USED FOR CONSTRUCTION

| | |
|---|---|
| DESIGNED BY: CD | SUPERVISED BY: CL |
| DRAWN BY: CD | CHECKED BY: CL |
| CAD FILE: | PROJECT NO.: 10736-01 |
| SCALE: AS NOTED | DATE: JULY 19, 2023 |

| REV | DATE | DESCRIPTION |
|---|---|---|

SHEET TITLE

TRAFFIC SIGNAL DETAILS 3

DRAWING NO.

**TS-05**

## GENERAL NOTES FOR TRAFFIC CONTROL PLAN

1. THE PERMITTEE SHALL MAKE MINOR ADJUSTMENTS AT INTERSECTIONS, DRIVEWAYS, BRIDGES, STRUCTURES, ETC., TO FIT FIELD CONDITIONS.
2. CONES OR DELINEATORS SHALL BE EXTENDED TO POINT WHERE THEY ARE VISIBLE TO APPROACHING TRAFFIC.
3. TRAFFIC CONTROL DEVICES SHALL BE INSTALLED SUCH THAT THE SIGN OR DEVICE FARTHEST FROM THE WORK AREA IS PLACED FIRST. THE OTHERS SHALL THEN BE PLACED PROGRESSIVELY TOWARD THE WORK AREA.
4. REGULATORY AND WARNING SIGNS WITHIN THE CONSTRUCTION ZONE THAT ARE IN CONFLICT WITH THE TRAFFIC CONTROL PLANS SHALL BE REMOVED OR COVERED.
5. FLAGGERS AND/OR POLICE OFFICERS SHALL BE IN SIGHT OF EACH OTHER OR IN DIRECT COMMUNICATION AT ALL TIMES.
6. WHEN REQUIRED BY THE ISSUING OFFICE, THE PERMITTEE SHALL INSTALL A FLASHING ARROW SIGNAL AS SHOWN ON THE TRAFFIC CONTROL PLANS.
7. ALL TRAFFIC LANES SHALL BE A MINIMUM OF 10 FEET WIDE.
8. ALL CONSTRUCTION WARNING SIGNS SHALL BE PROMPTLY REMOVED OR COVERED WHENEVER THE MESSAGE IS NOT APPLICABLE OR NOT IN USE.
9. THE BACKS OF ALL SIGNS USED FOR TRAFFIC CONTROL SHALL BE APPROPRIATELY COVERED TO PRECLUDE THE DISPLAY OF INAPPLICABLE SIGN MESSAGES (I.E., WHEN SIGNS HAVE MESSAGES ON BOTH FACES).
10. LANE CLOSURE SHALL BE LIMITED ONLY TO THE EXTENT OF ACCOMPLISHING EACH DAY'S WORK. AS SOON AS EACH DAY'S WORK IS COMPLETED, THE PERMITTEE SHALL REMOVE ALL TRAFFIC CONTROL DEVICES NO LONGER NEEDED TO PERMIT FREE AND SAFE PASSAGE OF PUBLIC TRAFFIC. REMOVAL SHALL BE IN THE REVERSE ORDER OF INSTALLATION. EXISTING FADED OR OBLITERATED PAVEMENT MARKINGS THAT ARE NECESSARY FOR SAFE TRAFFIC FLOW IN THE CONSTRUCTION AREA SHALL BE REPLACED WITH TEMPORARY OR PERMANENT MARKINGS BEFORE OPENING THE ROADWAY TO PUBLIC TRAFFIC EACH DAY.
11. PERMANENT PAVEMENT MARKINGS AND TRAFFIC SIGNS SHALL BE REPLACED UPON COMPLETION OF EACH PHASE OF WORK.
12. CONES AND DELINEATORS SHALL BE SPACED AT A MAXIMUM DISTANCE OF 20 FEET APART. A MINIMUM OF SIX CHANNELIZING DEVICES SHALL BE USED FOR EACH TAPER LENGTH.
13. DRIVEWAYS SHALL BE KEPT OPEN UNLESS THE OWNERS OF THE PROPERTY USING THE DRIVEWAY ARE OTHERWISE PROVIDED FOR SATISFACTORILY. FURTHER, THE PERMITTEE SHALL CONTROL TRAFFIC GOING INTO AND OUT OF DRIVEWAYS.
14. BUFFER AND TAPER AREA ON APPROACH TO ANY WORK AREA SHALL BE KEPT CLEAR OF VEHICLES AND EQUIPMENT.
15. A HIGH LEVEL WARNING DEVICE (FLAG TREE) SHALL BE INSTALLED ON APPROACH TO ALL WORK AREAS.
16. "NO PARKING" SIGNS SHALL BE POSTED WITHIN ANY WORK AREA AND FOR THE BUFFER AND TAPER AREAS APPROACHING THE WORK AREA.
17. TRAFFIC CONTROL PLANS ARE APPROVED FOR WORK ON ANY CITY STREET AREA ONLY BETWEEN THE HOURS OF 08:30 A.M. AND 03:30 P.M. (MONDAY–FRIDAY) AND 24 HOURS FOR CONCRETE CURING ONLY.
18. WHERE AN ACCESSIBLE AN PEDESTRIAN ROUTE IS CLOSED OR BLOCKED DURING CONSTRUCTION, CONTRACTOR TO PROVIDE TEMPORARY, ACCESSIBLE PEDESTRIAN ROUTE.
19. IN CASE OF THE 8:30 AM – 3:30 PM WORK, AT NO TIME PRIOR TO 8:30 AM SHALL LANES BE OBSTRUCTED EITHER TEMPORARILY OR MOMENTARILY THAT PREVENTS THE FREE MOVEMENT OF TRAFFIC BY ANY EQUIPMENT, VEHICLE, TRAFFIC CONTROL DEVICE, SIGNAGE OR PERSON CONTROLLED BY THE CONTRACTOR. NON–COMPLIANCE WILL RESULT IN THE IMMEDIATE REVOCATION OF THE STREET USAGE PERMIT. DTS WILL CAUSE ALL CONSTRUCTION ACTIVITIES TO CEASE. CONTRACTOR MAY APPLY FOR A NEW STREET USAGE PERMIT ONLY AFTER MEETING WITH THE DTS. THERE WILL BE NO EXTENSION OF CONTRACT TIME OR COMPENSATION GRANTED DUE TO DELAYS IN THE APPLICATION AND IN THE OBTAINING OF NEW STREET USAGE PERMIT.
20. IN THE CASE THAT A 24–HOUR ROAD CLOSURE IS PERMITTED, THE CONTRACTOR SHALL BE PRESENT AND ACTIVELY WORKING AT ALL TIMES ON THE CLOSED ROAD, OR SECTION OF ROAD. NON–COMPLIANCE WILL RESULT IN THE IMMEDIATE REVOCATION OF THE STREET USAGE PERMIT. DDC WILL CAUSE ALL CONSTRUCTION ACTIVITIES TO CEASE. CONTRACTOR MAY APPLY FOR A NEW STREET USAGE PERMIT ONLY AFTER MEETING WITH THE DTS AND DDC. THERE WILL BE NO EXTENSION OF CONTRACT TIME OR COMPENSATION GRANTED DUE TO DELAYS IN THE APPLICATION AND IN THE OBTAINING OF A NEW STREET USAGE PERMIT.
21. ALL CONSTRUCTION WARNING SIGNS SHALL BE PLACED TO PROVIDE ROOM FOR BICYCLES AND PEDESTRIANS TO THE MAXIMUM EXTENT FEASIBLE.

TRUE NORTH
SCALE: 1" = 40'

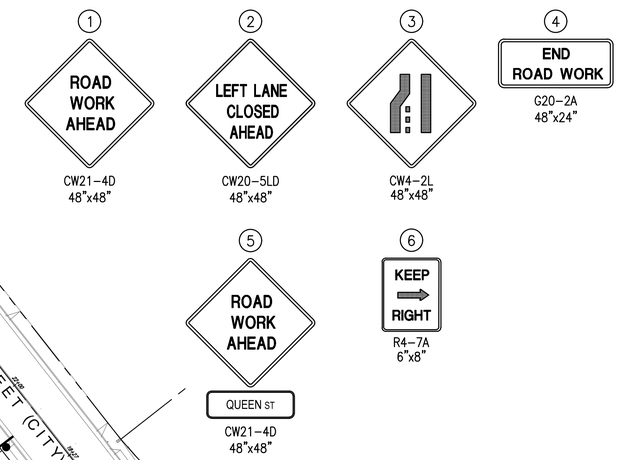


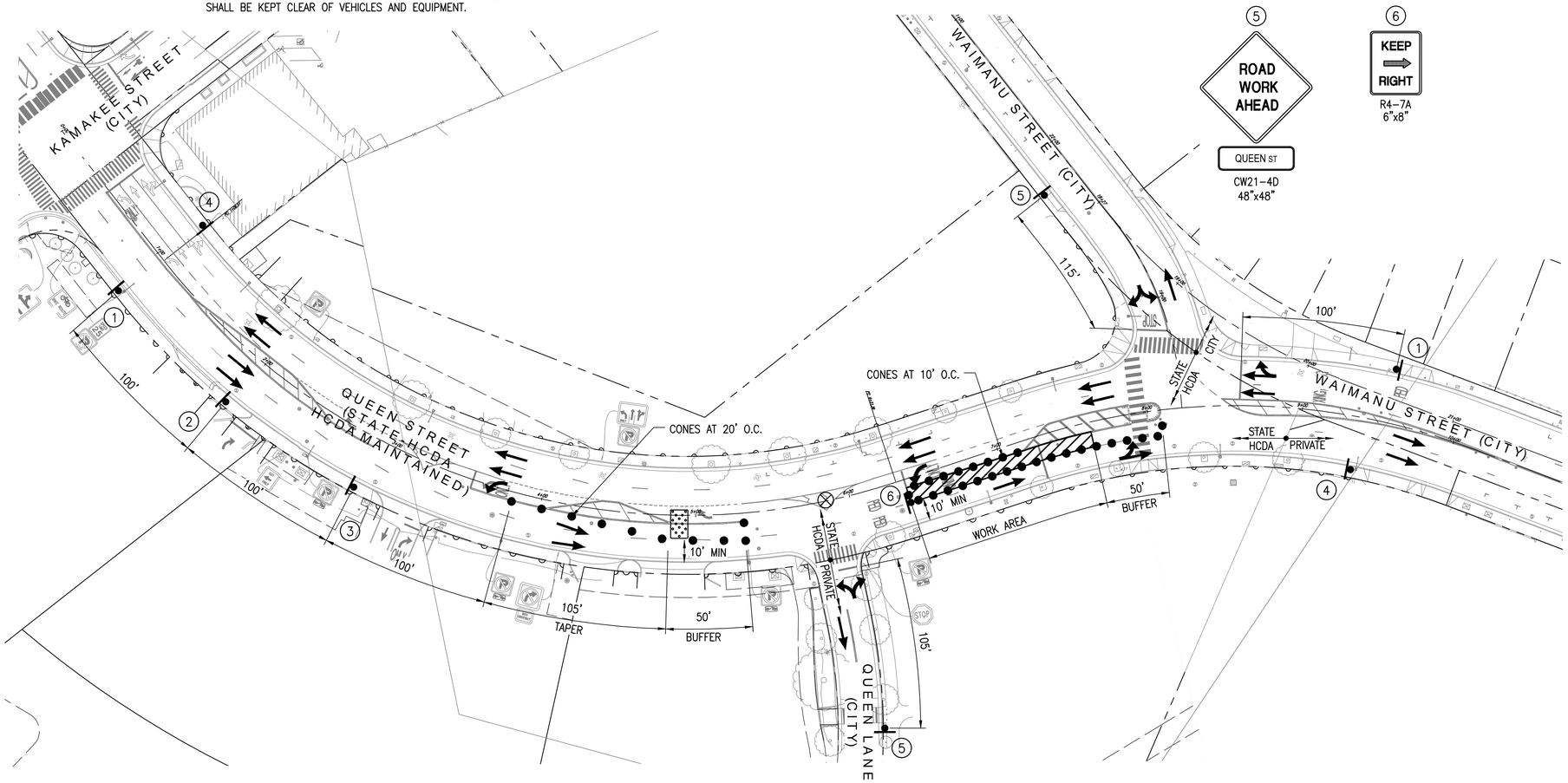


## LEGEND:

- CONE
- SIGN
- FLOW OF TRAFFIC
- WORK AREA
- SPECIAL DUTY OFFICER
- ARROW BOARD PANEL

## GRAPHIC SCALE:

40 20 0 40 80

SCALE: 1" = 40'

## NOTES:

1. POSTED SPEED LIMIT = 25 MPH (HCDA & CITY)
2. MINIMUM TRAVEL LANE WIDTH = 10'–0"
3. CONTRACTOR TO CONFIRM MAXIMUM LENGTH OF WORK AREA WITH CITY INSPECTOR PRIOR TO ANY LANE CLOSURE.

## TRAFFIC CONTROL PLAN 1

WORK HOURS: 8:30 A.M. TO 3:30 PM
DURATION: 1 WEEK
SCALE : 1"=40'

APPROVED:

CHIEF, TRAFFIC REVIEW BRANCH, D.P.P. DATE
CITY & COUNTY OF HONOLULU
(FOR WORK WITHIN CITY R.O.W. ONLY)


WILSON OKAMOTO CORPORATION
1907 South Beretania Street Suite 400
Honolulu, Hawaii, U.S.A. 96826
PH 808-946-2277 FX 808-946-2253
www.wilsonokamoto.com


PROJECT ID
QUEEN ST/ WAIMANU ST CROSSWALK IMPROVEMENTS PHASE 2
HONOLULU, HAWAII

*PREPARED FOR*
HAWAII COMMUNITY DEVELOPMENT AUTHORITY

CONSULTANT

FOR COORDINATION PURPOSES ONLY

NOT TO BE USED FOR CONSTRUCTION

| | |
|---|---|
| DESIGNED BY: CD | SUPERVISED BY: CL |
| DRAWN BY: CD | CHECKED BY: CL |
| CAD FILE: | PROJECT NO.: 10736-01 |
| SCALE: AS NOTED | DATE: JULY 19, 2023 |

| REV | DATE | DESCRIPTION |
|---|---|---|

SHEET TITLE
TRAFFIC CONTROL PLAN 1

DRAWING NO.
**TC-01**

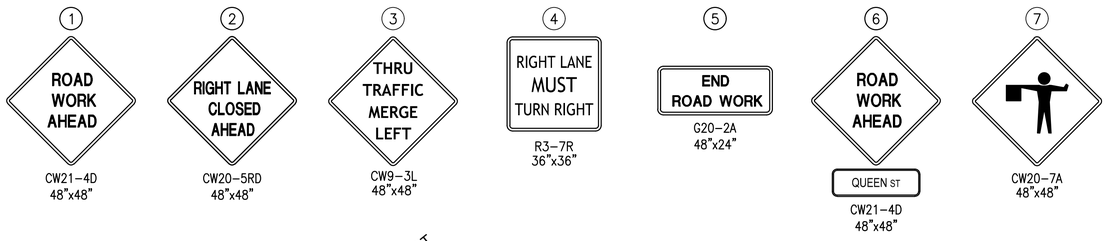


TRUE NORTH
SCALE: 1" = 40'

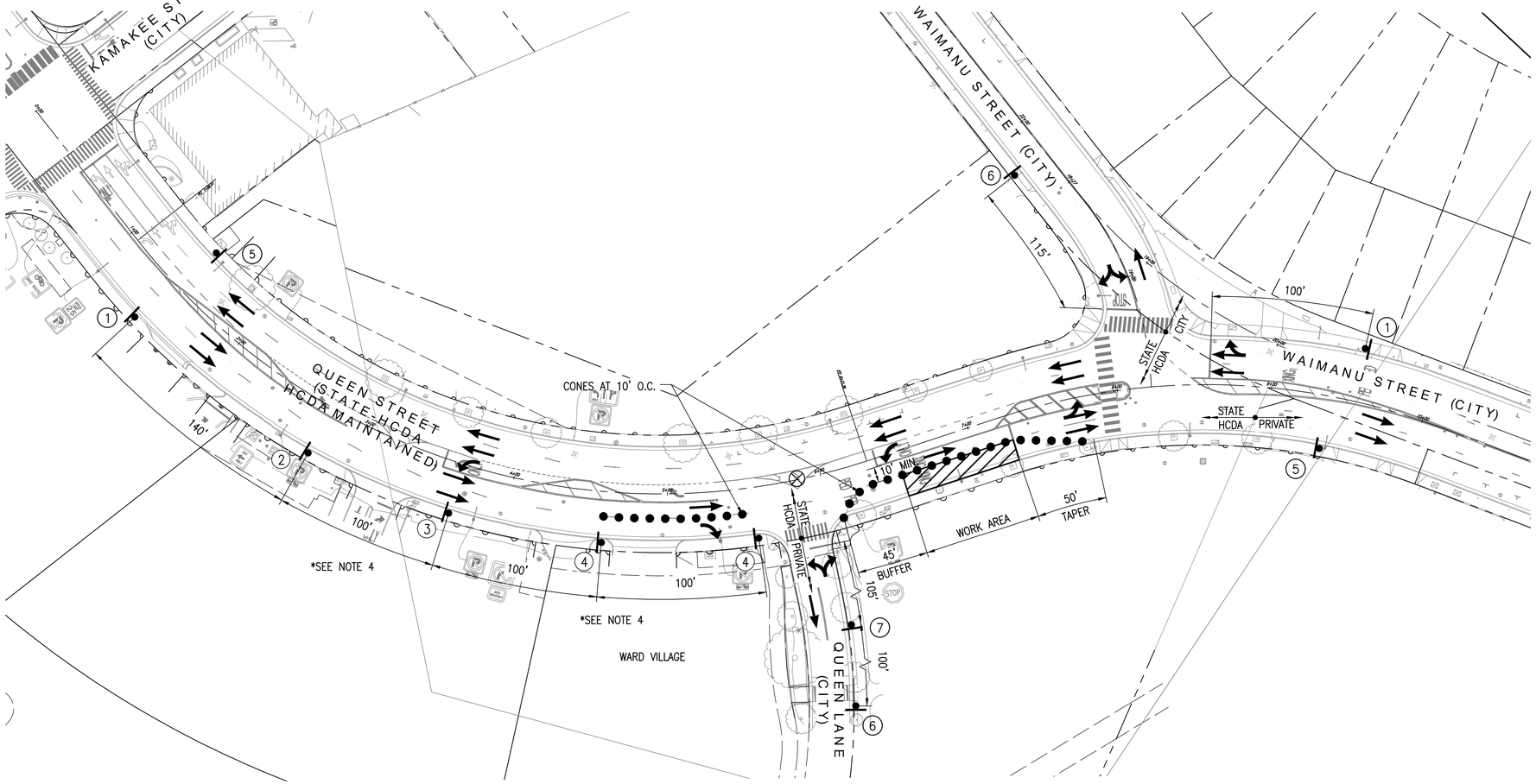


## LEGEND:

- CONE
- SIGN
- FLOW OF TRAFFIC
- WORK AREA
- SPECIAL DUTY OFFICER

## GRAPHIC SCALE:

40 20 0 40 80

SCALE: 1" = 40'

## NOTES:

1. POSTED SPEED LIMIT = 25 MPH (HCDA & CITY)
2. MINIMUM TRAVEL LANE WIDTH = 10'-0"
3. CONTRACTOR TO CONFIRM MAXIMUM LENGTH OF WORK AREA WITH CITY INSPECTOR PRIOR TO ANY LANE CLOSURE.
4. CONTRACTOR TO COORDINATE WITH ADJACENT PROPERTIES FOR DRIVEWAY CLOSURES ON QUEEN STREET IMPACTING DRIVEWAY ACCESS.

## TRAFFIC CONTROL PLAN 2

WORK HOURS: 8:30 A.M. TO 3:30 PM
DURATION: 1 WEEK
SCALE : 1"=40'

**APPROVED:**

CHIEF, TRAFFIC REVIEW BRANCH, D.P.P.
CITY & COUNTY OF HONOLULU
(FOR WORK WITHIN CITY R.O.W. ONLY)

DATE

WILSON OKAMOTO CORPORATION
1907 South Beretania Street Suite 400
Honolulu, Hawaii, U.S.A. 96826
PH 808-946-2277 FX 808-946-2253
www.wilsonokamoto.com

PROJECT ID
QUEEN ST/ WAIMANU ST CROSSWALK IMPROVEMENTS PHASE 2
HONOLULU, HAWAII

*PREPARED FOR*
HAWAII COMMUNITY DEVELOPMENT AUTHORITY

CONSULTANT

FOR COORDINATION PURPOSES ONLY

NOT TO BE USED FOR CONSTRUCTION

| | |
|---|---|
| DESIGNED BY: CD | SUPERVISED BY: CL |
| DRAWN BY: CD | CHECKED BY: CL |
| CAD FILE: | PROJECT NO.: 10736-01 |
| SCALE: AS NOTED | DATE: JULY 19, 2023 |

| REV | DATE | DESCRIPTION |
|---|---|---|

SHEET TITLE
TRAFFIC CONTROL PLAN 2

DRAWING NO.
**TC-02**

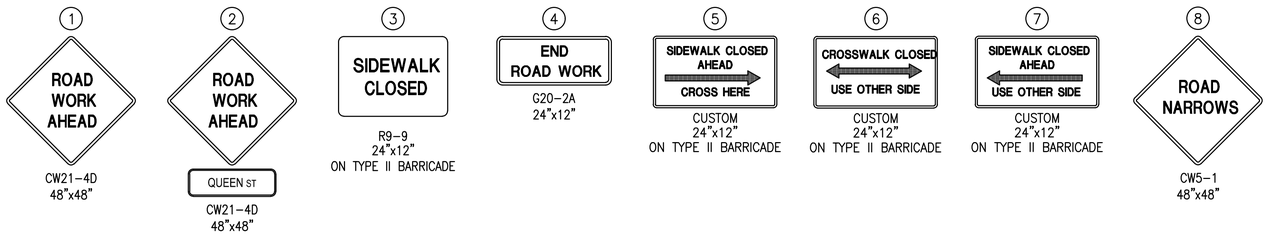


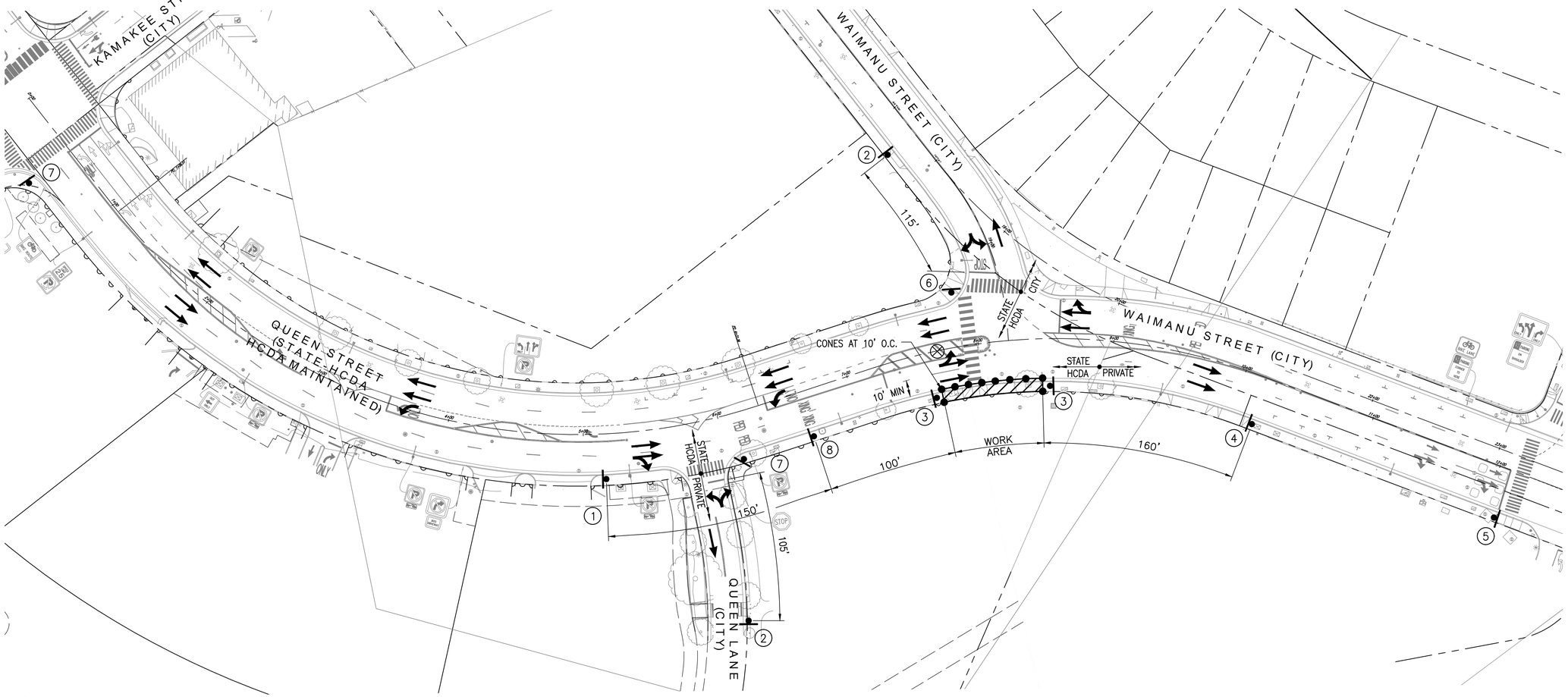


## LEGEND:

- CONE
- SIGN
- FLOW OF TRAFFIC
- WORK AREA
- SPECIAL DUTY OFFICER

## GRAPHIC SCALE:

40 20 0 40 80

SCALE: 1" = 40'

## NOTES:

1. POSTED SPEED LIMIT = 25 MPH (HCDA & CITY)
2. MINIMUM TRAVEL LANE WIDTH = 10'-0"
3. CONTRACTOR TO CONFIRM MAXIMUM LENGTH OF WORK AREA WITH CITY INSPECTOR PRIOR TO ANY LANE CLOSURE.

## TRAFFIC CONTROL PLAN 3

WORK HOURS: 8:30 A.M. TO 3:30 PM
DURATION: 1 WEEK
SCALE : 1"=40'

**APPROVED:**

CHIEF, TRAFFIC REVIEW BRANCH, D.P.P. DATE
CITY & COUNTY OF HONOLULU
(FOR WORK WITHIN CITY R.O.W. ONLY)


WILSON OKAMOTO CORPORATION
1907 South Beretania Street Suite 400
Honolulu, Hawaii, U.S.A. 96826
PH 808-946-2277 FX 808-946-2253
www.wilsonokamoto.com


PROJECT ID
QUEEN ST/ WAIMANU ST CROSSWALK IMPROVEMENTS PHASE 2
HONOLULU, HAWAII

*PREPARED FOR*
HAWAII COMMUNITY DEVELOPMENT AUTHORITY

CONSULTANT

FOR COORDINATION PURPOSES ONLY

NOT TO BE USED FOR CONSTRUCTION

| | |
|---|---|
| DESIGNED BY: CD | SUPERVISED BY: CL |
| DRAWN BY: CD | CHECKED BY: CL |
| CAD FILE: | PROJECT NO.: 10736-01 |
| SCALE: AS NOTED | DATE: JULY 19, 2023 |

| REV | DATE | DESCRIPTION |
|---|---|---|

SHEET TITLE
TRAFFIC CONTROL PLAN 3

DRAWING NO.
**TC-03**

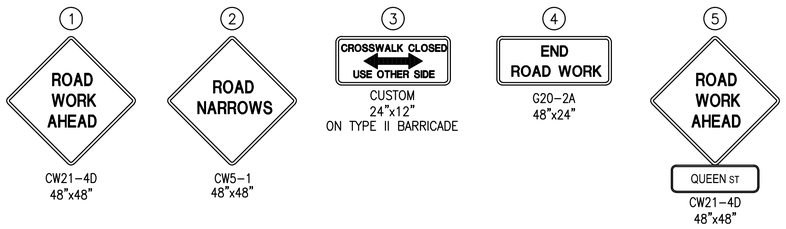


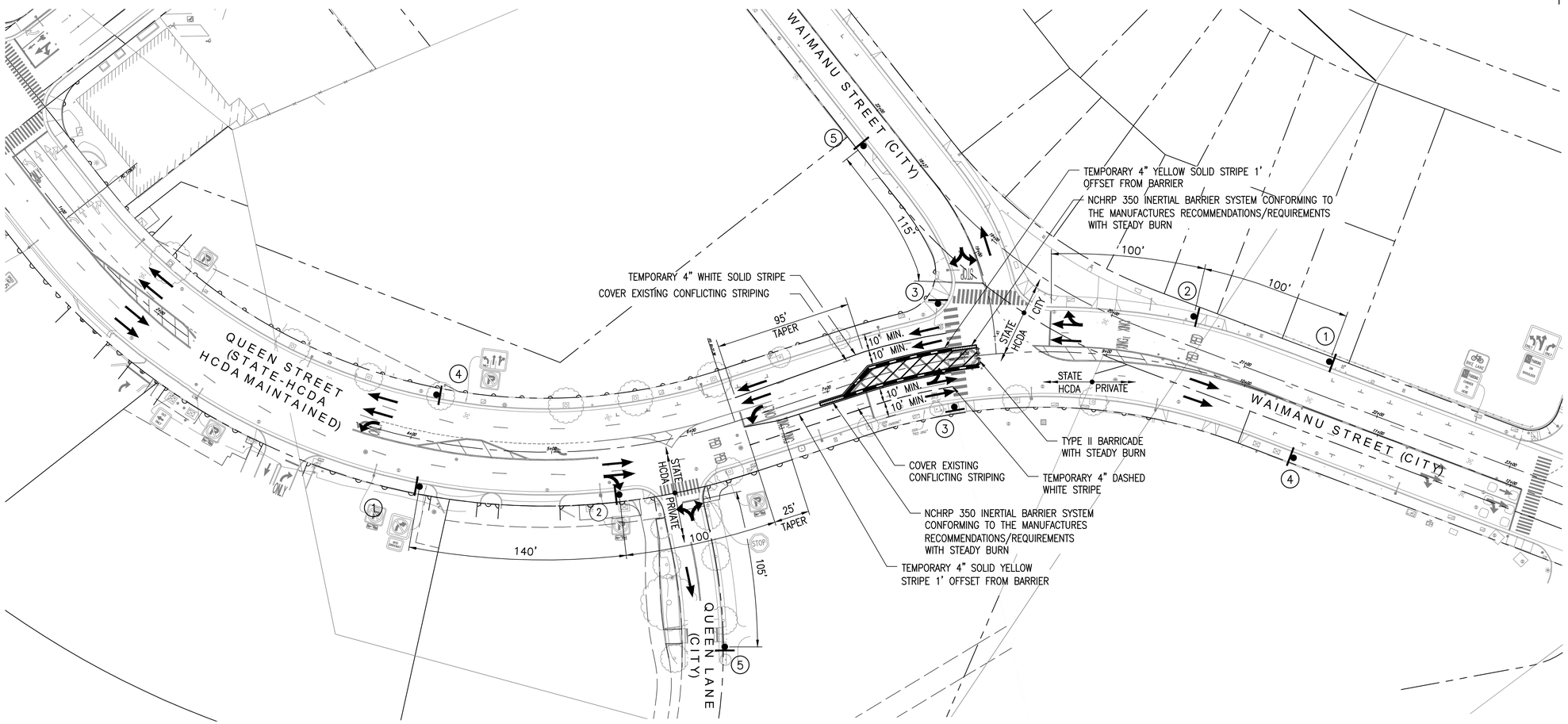


## LEGEND:

- SIGN
- FLOW OF TRAFFIC
- TYPE II BARRICADE
- WORK AREA
- CRASHWORTHY BARRIER W/ STEADY BURN

## GRAPHIC SCALE:

40 20 0 40 80

SCALE: 1" = 40'

## NOTES:

1. POSTED SPEED LIMIT = 25 MPH (CITY)
2. MINIMUM TRAVEL LANE WIDTH = 10'-0"
3. CONTRACTOR TO CONFIRM MAXIMUM LENGTH OF WORK AREA WITH CITY INSPECTOR PRIOR TO ANY LANE CLOSURE.
4. ALL EXISTING PAVEMENT MARKINGS THAT CONFLICTS WITH TEMPORARY STRIPING SHOWN IN THE TRAFFIC CONTROL PLANS SHALL BE REMOVED.

## TRAFFIC CONTROL PLAN 4

WORK HOURS: 24-HOUR CLOSURE
DURATION: 2 WEEKS
SCALE : 1"=40'

APPROVED:

CHIEF, TRAFFIC REVIEW BRANCH, D.P.P. DATE
CITY & COUNTY OF HONOLULU
(FOR WORK WITHIN CITY R.O.W. ONLY)

WILSON OKAMOTO CORPORATION
1907 South Beretania Street Suite 400
Honolulu, Hawaii, U.S.A. 96826
PH 808-946-2277 FX 808-946-2253
www.wilsonokamoto.com

PROJECT ID
QUEEN ST/ WAIMANU ST CROSSWALK IMPROVEMENTS PHASE 2
HONOLULU, HAWAII

*PREPARED FOR*
HAWAII COMMUNITY DEVELOPMENT AUTHORITY

CONSULTANT

FOR COORDINATION PURPOSES ONLY

NOT TO BE USED FOR CONSTRUCTION

| | |
|---|---|
| DESIGNED BY: CD | SUPERVISED BY: CL |
| DRAWN BY: CD | CHECKED BY: CL |
| CAD FILE: | PROJECT NO.: 10736-01 |
| SCALE: AS NOTED | DATE: JULY 19, 2023 |

| REV | DATE | DESCRIPTION |
|---|---|---|

SHEET TITLE
TRAFFIC CONTROL PLAN 4

DRAWING NO.
**TC-04**

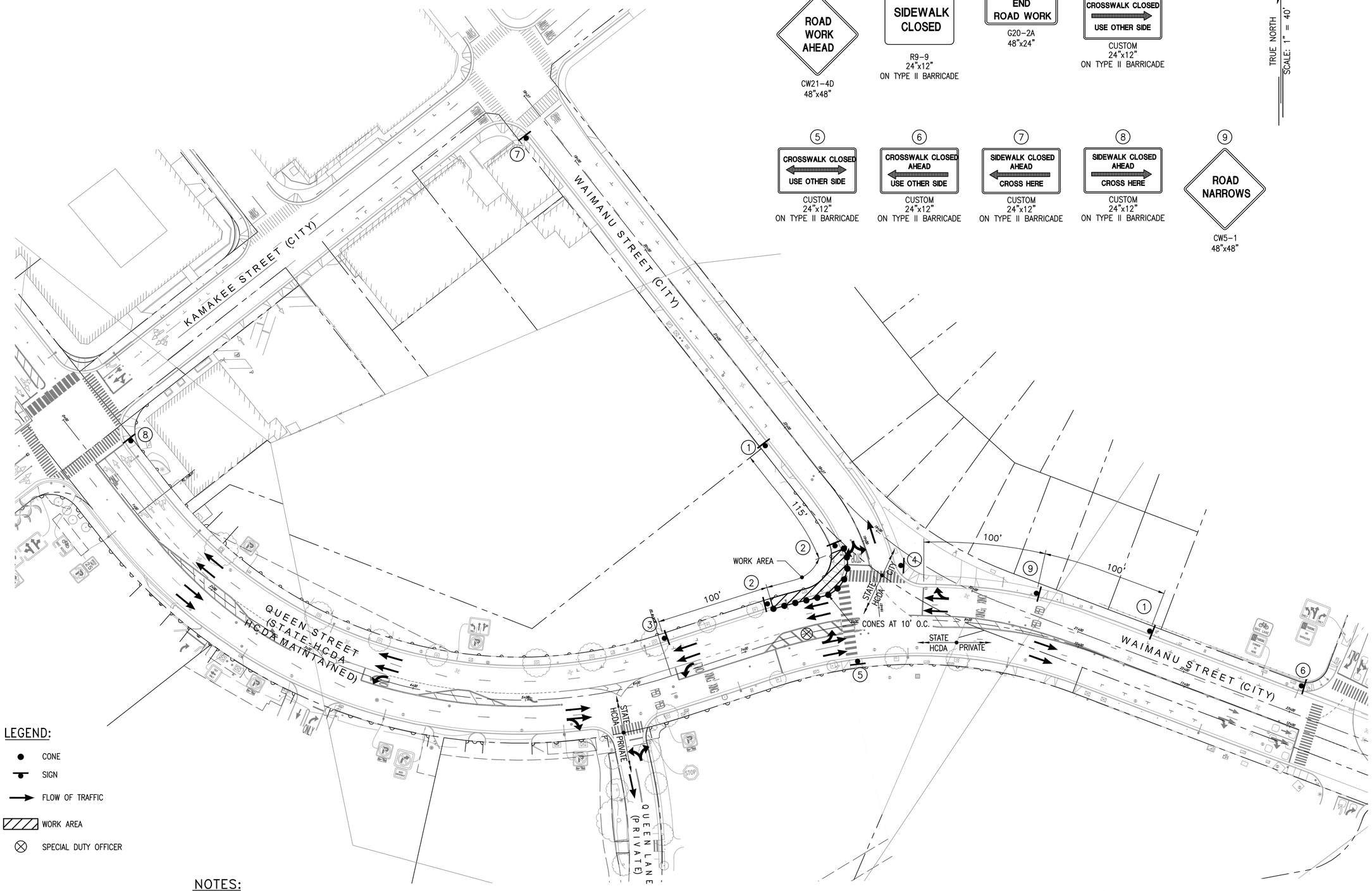


1. ROAD WORK AHEAD — CW21-4D 48"x48"
2. SIDEWALK CLOSED — R9-9 24"x12" ON TYPE II BARRICADE
3. END ROAD WORK — G20-2A 48"x24"
4. CROSSWALK CLOSED USE OTHER SIDE — CUSTOM 24"x12" ON TYPE II BARRICADE
5. CROSSWALK CLOSED USE OTHER SIDE — CUSTOM 24"x12" ON TYPE II BARRICADE
6. CROSSWALK CLOSED AHEAD USE OTHER SIDE — CUSTOM 24"x12" ON TYPE II BARRICADE
7. SIDEWALK CLOSED AHEAD CROSS HERE — CUSTOM 24"x12" ON TYPE II BARRICADE
8. SIDEWALK CLOSED AHEAD CROSS HERE — CUSTOM 24"x12" ON TYPE II BARRICADE
9. ROAD NARROWS — CW5-1 48"x48"

TRUE NORTH
SCALE: 1" = 40'

## LEGEND:

- CONE
- SIGN
- FLOW OF TRAFFIC
- WORK AREA
- SPECIAL DUTY OFFICER

## GRAPHIC SCALE:

40 20 0 40 80

SCALE: 1" = 40'

## NOTES:

1. POSTED SPEED LIMIT = 25 MPH (HCDA & CITY)
2. MINIMUM TRAVEL LANE WIDTH = 10'-0"
3. CONTRACTOR TO CONFIRM MAXIMUM LENGTH OF WORK AREA WITH CITY INSPECTOR PRIOR TO ANY LANE CLOSURE.

## TRAFFIC CONTROL PLAN 5

WORK HOURS: 8:30 A.M. TO 3:30 PM
DURATION: 1 WEEK
SCALE : 1"=40'

APPROVED:

CHIEF, TRAFFIC REVIEW BRANCH, D.P.P. DATE
CITY & COUNTY OF HONOLULU
(FOR WORK WITHIN CITY R.O.W. ONLY)

WILSON OKAMOTO CORPORATION
1907 South Beretania Street Suite 400
Honolulu, Hawaii, U.S.A. 96826
PH 808-946-2277 FX 808-946-2253
www.wilsonokamoto.com

PROJECT ID
QUEEN ST/ WAIMANU ST CROSSWALK IMPROVEMENTS PHASE 2
HONOLULU, HAWAII

*PREPARED FOR*
HAWAII COMMUNITY DEVELOPMENT AUTHORITY

CONSULTANT

FOR COORDINATION PURPOSES ONLY

NOT TO BE USED FOR CONSTRUCTION

| | |
|---|---|
| DESIGNED BY: CD | SUPERVISED BY: CL |
| DRAWN BY: CD | CHECKED BY: CL |
| CAD FILE: | PROJECT NO.: 10736-01 |
| SCALE: AS NOTED | DATE: JULY 19, 2023 |

| REV | DATE | DESCRIPTION |
|---|---|---|

SHEET TITLE
TRAFFIC CONTROL PLAN 5

DRAWING NO.
**TC-05**

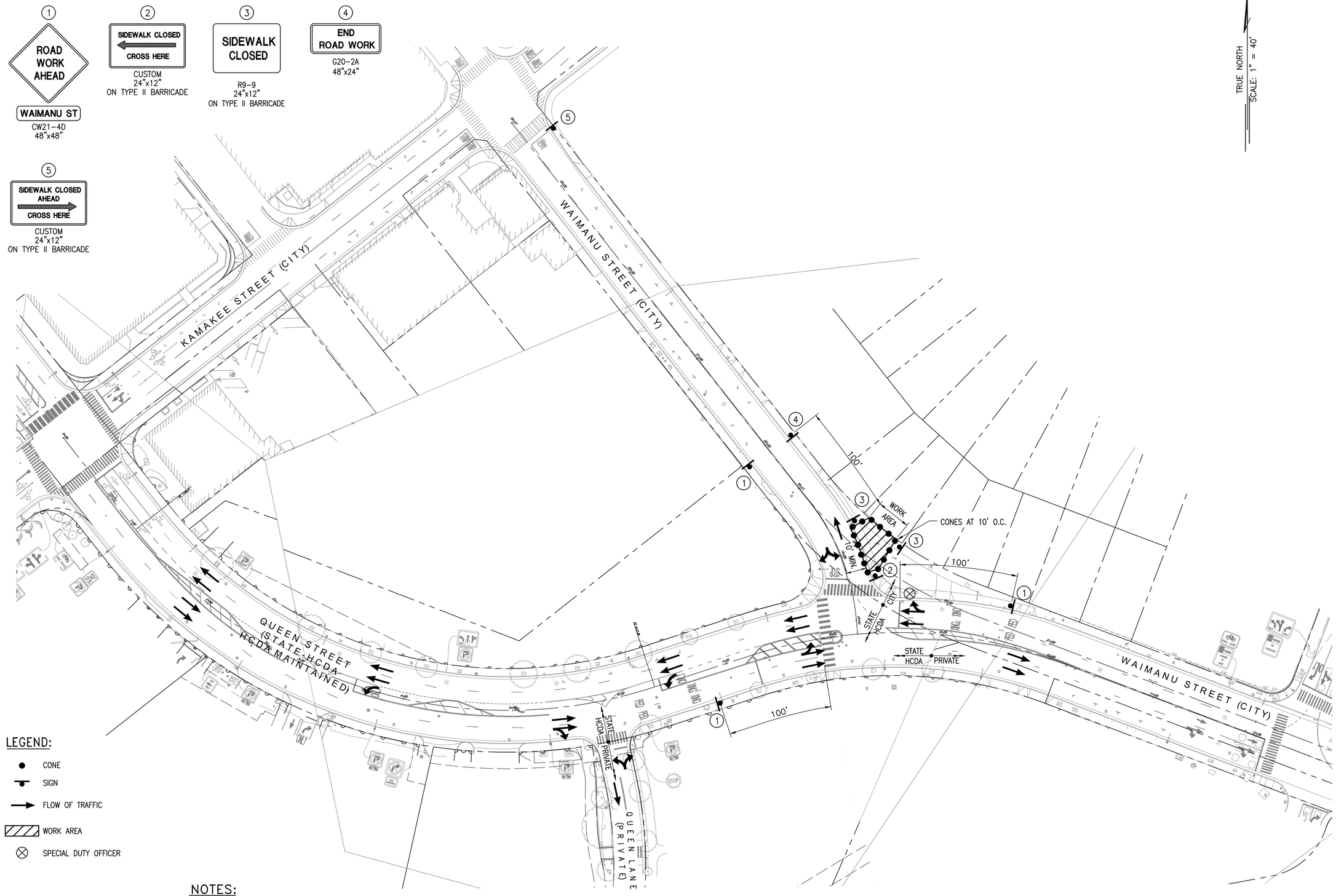


## LEGEND:

- CONE
- SIGN
- FLOW OF TRAFFIC
- WORK AREA
- SPECIAL DUTY OFFICER

## GRAPHIC SCALE:

40 20 0 40 80

SCALE: 1" = 40'

## NOTES:

1. POSTED SPEED LIMIT = 25 MPH (HCDA & CITY)
2. MINIMUM TRAVEL LANE WIDTH = 10'-0"
3. CONTRACTOR TO CONFIRM MAXIMUM LENGTH OF WORK AREA WITH CITY INSPECTOR PRIOR TO ANY LANE CLOSURE.

## TRAFFIC CONTROL PLAN 6

WORK HOURS: 8:30 A.M. TO 3:30 PM
DURATION: 1 WEEK
SCALE : 1"=40'

**APPROVED:**

CHIEF, TRAFFIC REVIEW BRANCH, D.P.P. DATE
CITY & COUNTY OF HONOLULU
(FOR WORK WITHIN CITY R.O.W. ONLY)


WILSON OKAMOTO CORPORATION
1907 South Beretania Street Suite 400
Honolulu, Hawaii, U.S.A. 96826
PH 808-946-2277 FX 808-946-2253
www.wilsonokamoto.com


PROJECT ID
QUEEN ST/ WAIMANU ST CROSSWALK IMPROVEMENTS PHASE 2
HONOLULU, HAWAII

*PREPARED FOR*
HAWAII COMMUNITY DEVELOPMENT AUTHORITY

CONSULTANT

FOR COORDINATION PURPOSES ONLY

NOT TO BE USED FOR CONSTRUCTION

| | |
|---|---|
| DESIGNED BY: CD | SUPERVISED BY: CL |
| DRAWN BY: CD | CHECKED BY: CL |
| CAD FILE: | PROJECT NO.: 10736-01 |
| SCALE: AS NOTED | DATE: JULY 19, 2023 |

| REV | DATE | DESCRIPTION |
|---|---|---|

SHEET TITLE
TRAFFIC CONTROL PLAN 6

DRAWING NO.
**TC-06**

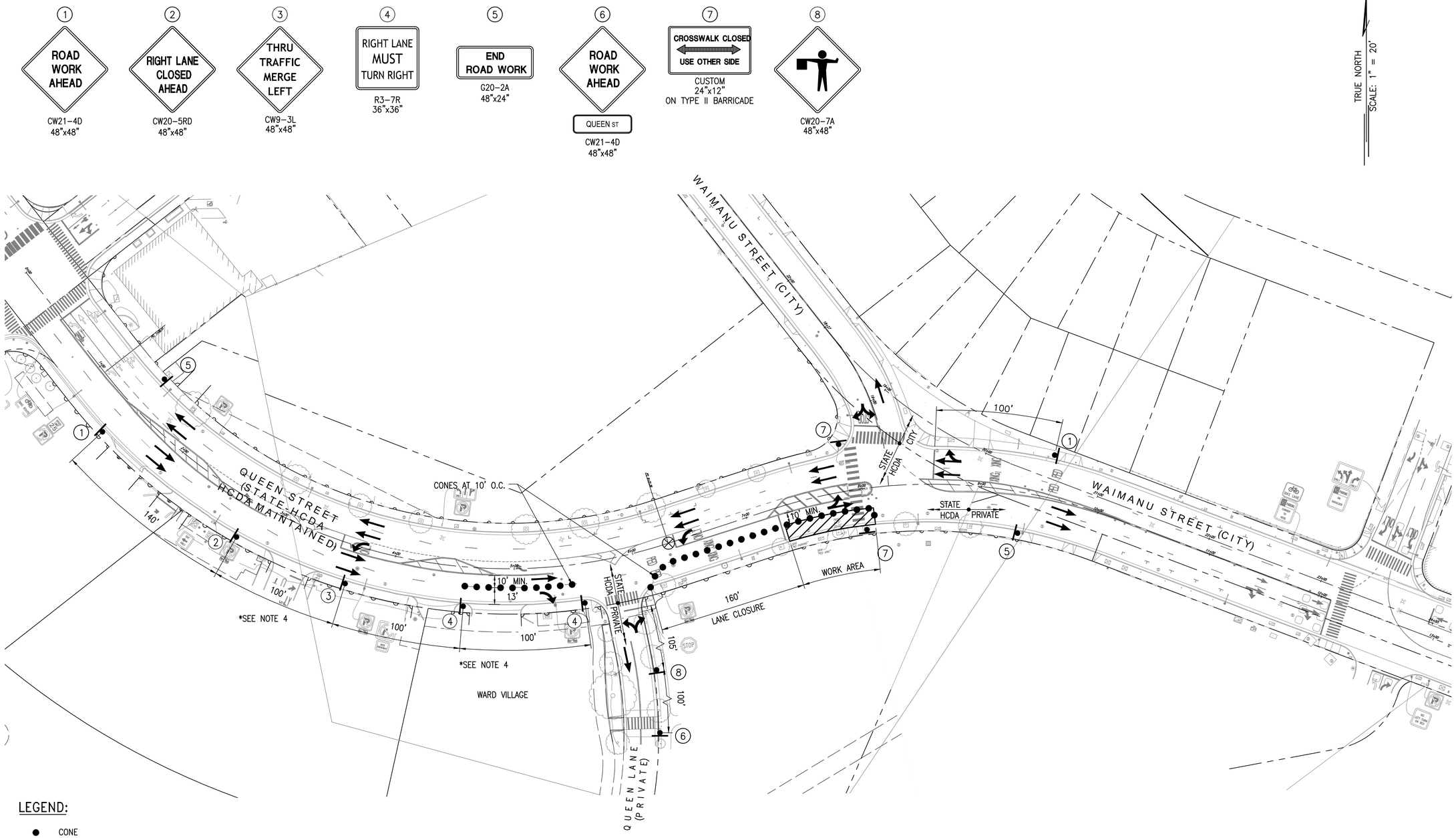


## LEGEND:

- CONE
- SIGN
- FLOW OF TRAFFIC
- WORK AREA
- SPECIAL DUTY OFFICER

## GRAPHIC SCALE:

40 20 0 40 80

SCALE: 1" = 40'

## NOTES:

1. POSTED SPEED LIMIT = 25 MPH (HCDA & CITY)
2. MINIMUM TRAVEL LANE WIDTH = 10'-0"
3. CONTRACTOR TO CONFIRM MAXIMUM LENGTH OF WORK AREA WITH CITY INSPECTOR PRIOR TO ANY LANE CLOSURE.
4. CONTRACTOR TO COORDINATE WITH ADJACENT PROPERTIES FOR DRIVEWAY CLOSURES ON QUEEN STREET IMPACTING DRIVEWAY ACCESS.

## TRAFFIC CONTROL PLAN 7

WORK HOURS: 8:30 A.M. TO 3:30 PM
DURATION: 1 WEEK
SCALE : 1"=40'

**APPROVED:**

CHIEF, TRAFFIC REVIEW BRANCH, D.P.P.
CITY & COUNTY OF HONOLULU
(FOR WORK WITHIN CITY R.O.W. ONLY)

DATE


WILSON OKAMOTO CORPORATION
1907 South Beretania Street Suite 400
Honolulu, Hawaii, U.S.A. 96826
PH 808-946-2277 FX 808-946-2253
www.wilsonokamoto.com


PROJECT ID
QUEEN ST/ WAIMANU ST CROSSWALK IMPROVEMENTS PHASE 2
HONOLULU, HAWAII

*PREPARED FOR*
HAWAII COMMUNITY DEVELOPMENT AUTHORITY

CONSULTANT

FOR COORDINATION PURPOSES ONLY

NOT TO BE USED FOR CONSTRUCTION

| | |
|---|---|
| DESIGNED BY: CD | SUPERVISED BY: CL |
| DRAWN BY: CD | CHECKED BY: CL |
| CAD FILE: | PROJECT NO.: 10736-01 |
| SCALE: AS NOTED | DATE: JULY 19, 2023 |

| REV | DATE | DESCRIPTION |
|---|---|---|

SHEET TITLE
TRAFFIC CONTROL PLAN 7

DRAWING NO.
**TC-07**

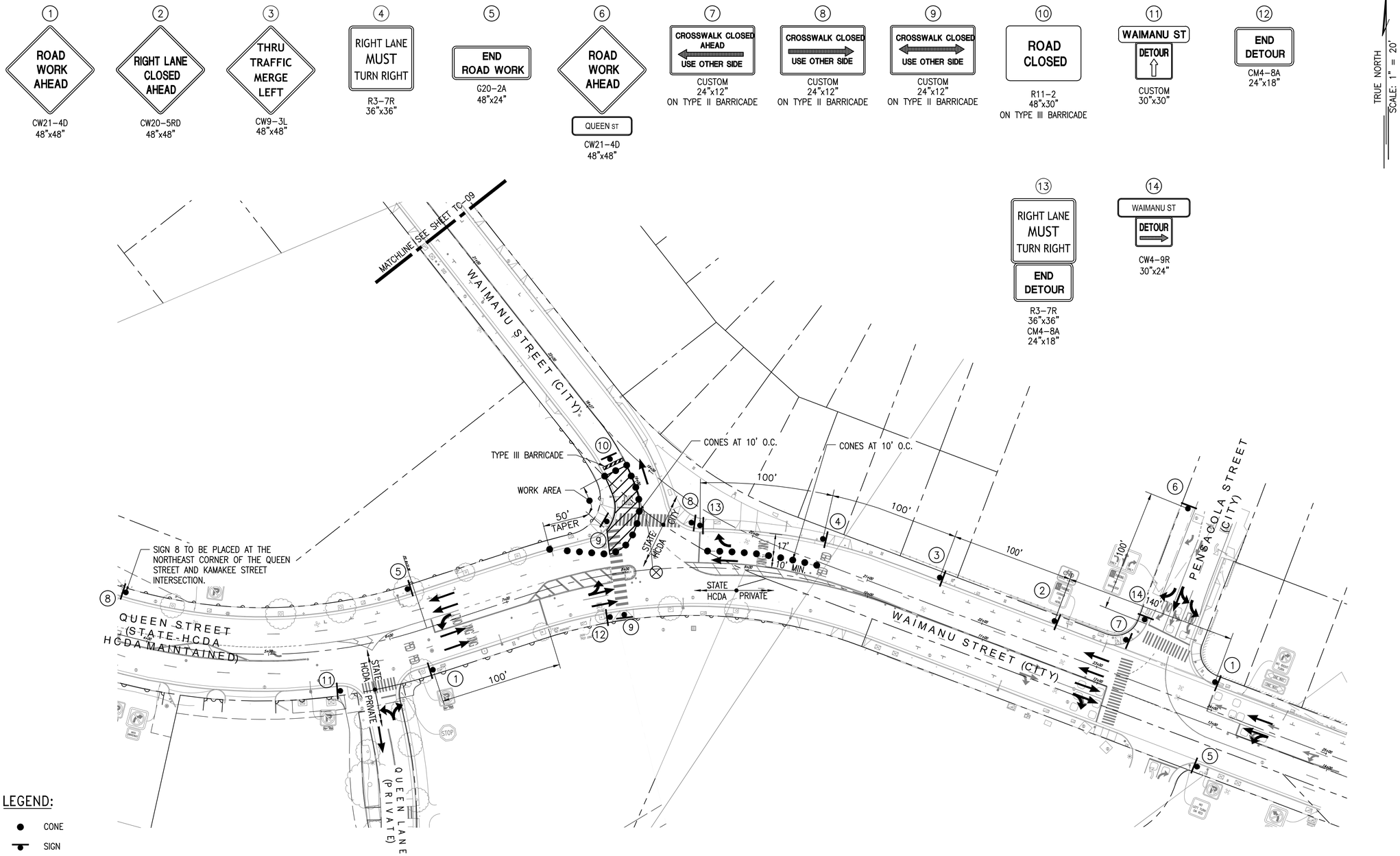


## LEGEND:

- CONE
- SIGN
- FLOW OF TRAFFIC
- WORK AREA
- SPECIAL DUTY OFFICER
- TYPE III BARRICADE
- ARROW BOARD PANEL

## GRAPHIC SCALE:

40 20 0 40 80

SCALE: 1" = 40'

## NOTES:

1. POSTED SPEED LIMIT = 25 MPH (HCDA & CITY)
2. MINIMUM TRAVEL LANE WIDTH = 10'-0"
3. CONTRACTOR TO CONFIRM MAXIMUM LENGTH OF WORK AREA WITH CITY INSPECTOR PRIOR TO ANY LANE CLOSURE.
4. FOR DETOUR PLAN SEE SHEET TD-01.

## TRAFFIC CONTROL PLAN 8

WORK HOURS: 8:30 A.M. TO 3:30 PM
DURATION: 1 WEEK
SCALE : 1"=40'

APPROVED:

CHIEF, TRAFFIC REVIEW BRANCH, D.P.P. DATE
CITY & COUNTY OF HONOLULU
(FOR WORK WITHIN CITY R.O.W. ONLY)


WILSON OKAMOTO CORPORATION
1907 South Beretania Street Suite 400
Honolulu, Hawaii, U.S.A. 96826
PH 808-946-2277 FX 808-946-2253
www.wilsonokamoto.com


PROJECT ID
QUEEN ST/ WAIMANU ST CROSSWALK IMPROVEMENTS PHASE 2
HONOLULU, HAWAII

*PREPARED FOR*
HAWAII COMMUNITY DEVELOPMENT AUTHORITY

CONSULTANT

FOR COORDINATION PURPOSES ONLY

NOT TO BE USED FOR CONSTRUCTION

| | |
|---|---|
| DESIGNED BY: CD | SUPERVISED BY: CL |
| DRAWN BY: CD | CHECKED BY: CL |
| CAD FILE: | PROJECT NO.: 10736-01 |
| SCALE: AS NOTED | DATE: JULY 19, 2023 |

| REV | DATE | DESCRIPTION |
|---|---|---|

SHEET TITLE
TRAFFIC CONTROL PLAN 8

DRAWING NO.
**TC-08**

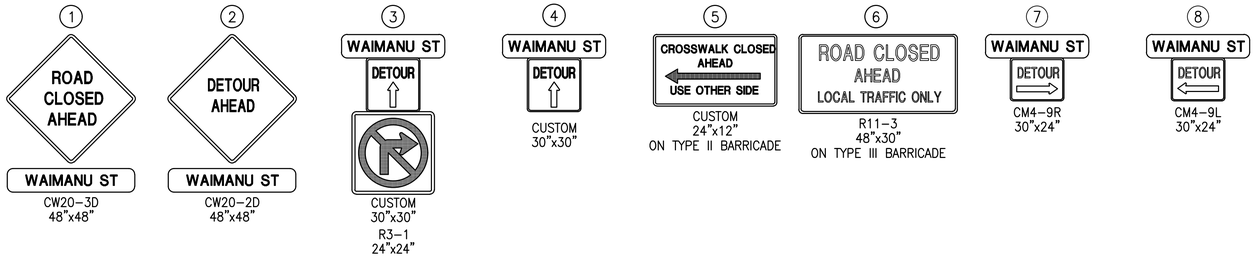


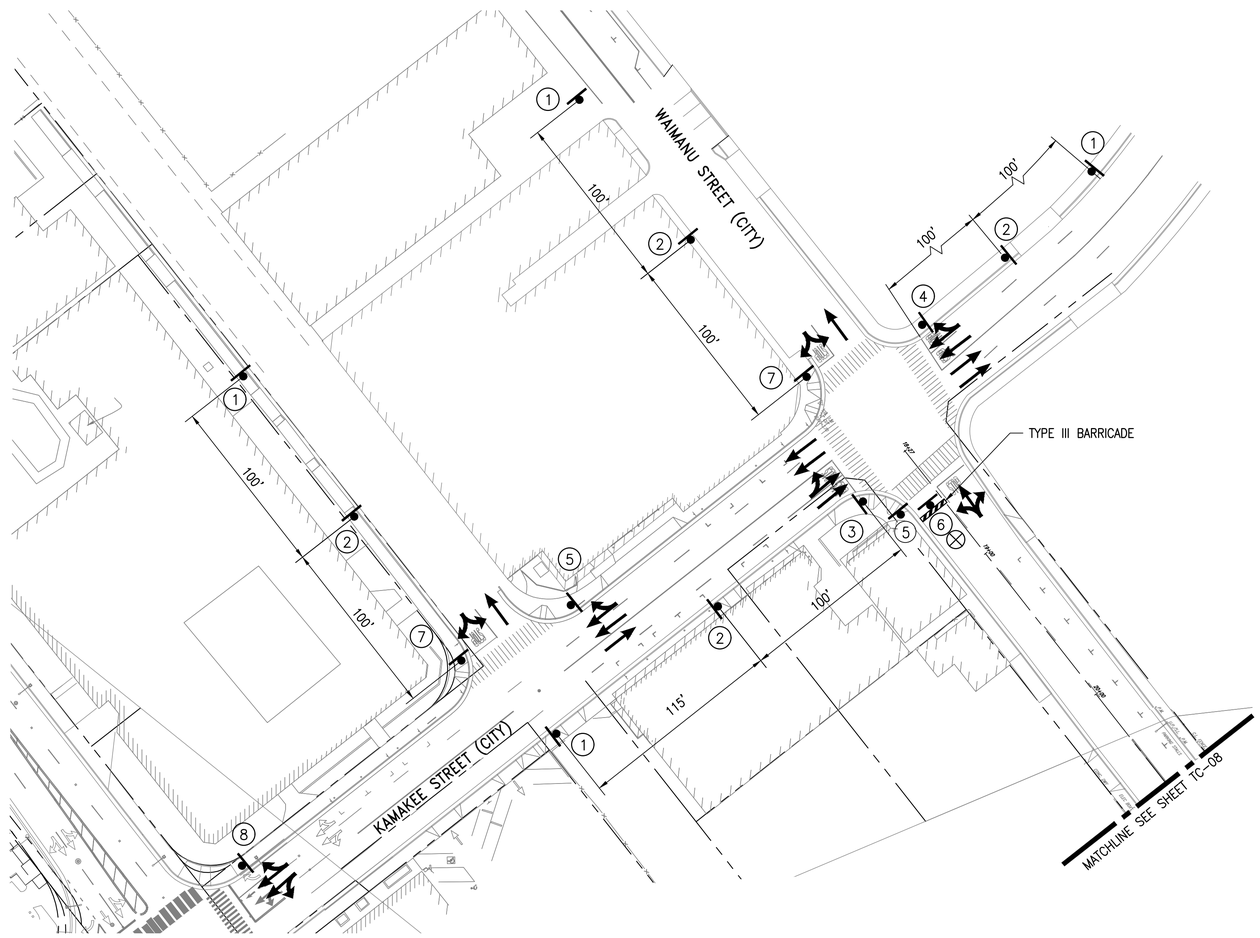


## LEGEND:

- CONE
- SIGN
- FLOW OF TRAFFIC
- SPECIAL DUTY OFFICER
- TYPE III BARRICADE

## GRAPHIC SCALE:

40 20 0 40 80

SCALE: 1" = 40'

## NOTES:

1. POSTED SPEED LIMIT = 25 MPH (HCDA & CITY)
2. MINIMUM TRAVEL LANE WIDTH = 10'-0"
3. FOR DETOUR PLAN SEE SHEET TD-01.

## TRAFFIC CONTROL PLAN 9

WORK HOURS: 8:30 A.M. TO 3:30 PM
DURATION: 1 WEEK
SCALE : 1"=40'

**APPROVED:**

CHIEF, TRAFFIC REVIEW BRANCH, D.P.P. DATE
CITY & COUNTY OF HONOLULU
(FOR WORK WITHIN CITY R.O.W. ONLY)


WILSON OKAMOTO CORPORATION
1907 South Beretania Street Suite 400
Honolulu, Hawaii, U.S.A. 96826
PH 808-946-2277 FX 808-946-2253
www.wilsonokamoto.com


PROJECT ID
QUEEN ST/ WAIMANU ST CROSSWALK IMPROVEMENTS PHASE 2
HONOLULU, HAWAII

*PREPARED FOR*
HAWAII COMMUNITY DEVELOPMENT AUTHORITY

CONSULTANT

FOR COORDINATION PURPOSES ONLY

NOT TO BE USED FOR CONSTRUCTION

| | |
|---|---|
| DESIGNED BY: CD | SUPERVISED BY: CL |
| DRAWN BY: CD | CHECKED BY: CL |
| CAD FILE: | PROJECT NO.: 10736-01 |
| SCALE: AS NOTED | DATE: JULY 19, 2023 |

| REV | DATE | DESCRIPTION |
|---|---|---|

SHEET TITLE
TRAFFIC CONTROL PLAN 9

DRAWING NO.
**TC-09**

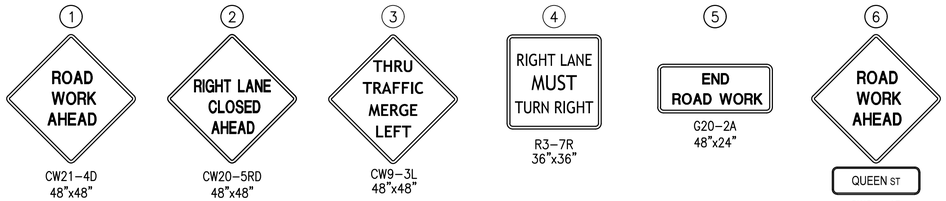


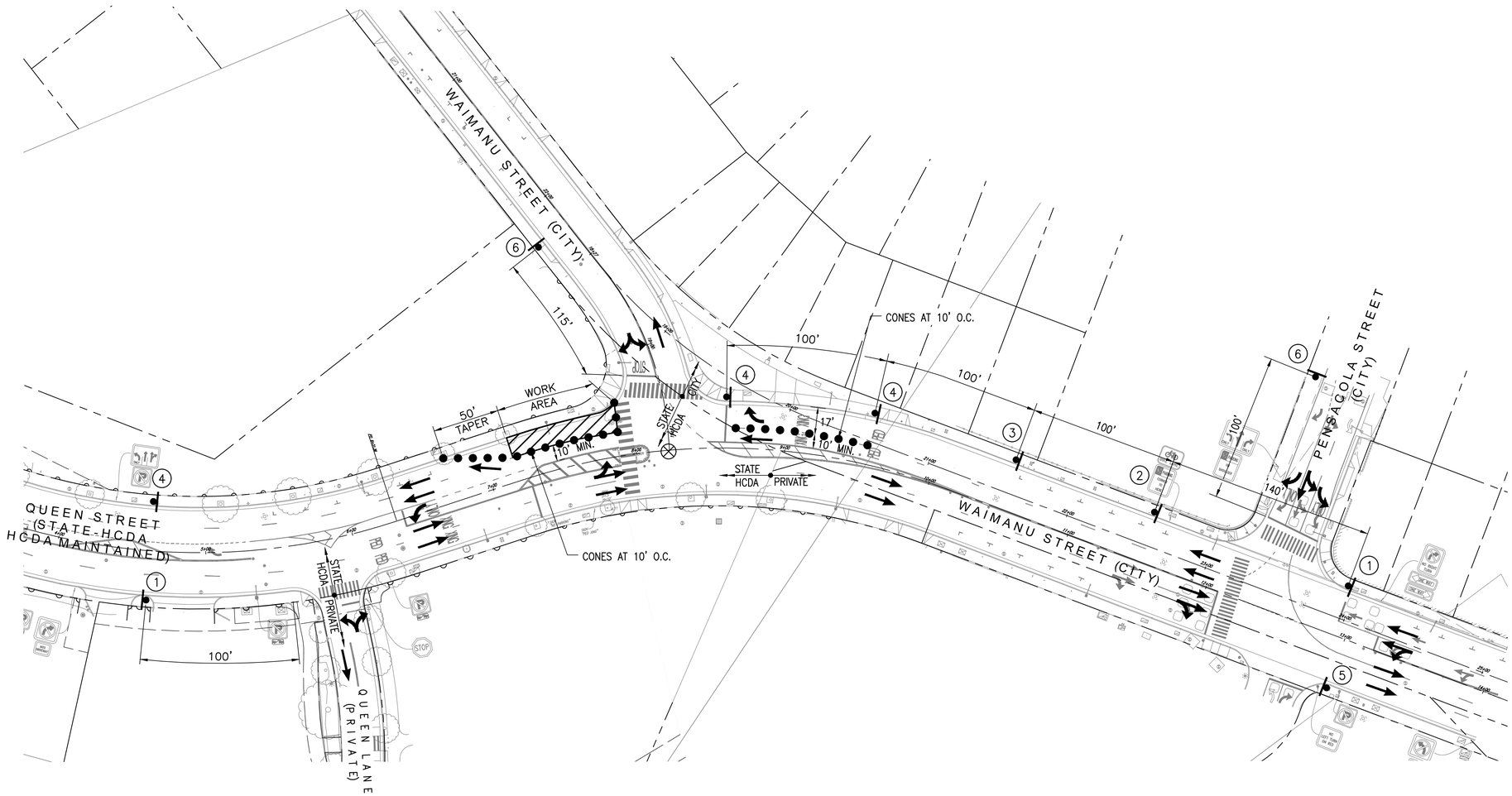


## LEGEND:

- CONE
- SIGN
- FLOW OF TRAFFIC
- WORK AREA
- SPECIAL DUTY OFFICER

## GRAPHIC SCALE:

40 20 0 40 80

SCALE: 1" = 40'

## NOTES:

1. POSTED SPEED LIMIT = 25 MPH (HCDA & CITY)
2. MINIMUM TRAVEL LANE WIDTH = 10'-0"
3. CONTRACTOR TO CONFIRM MAXIMUM LENGTH OF WORK AREA WITH CITY INSPECTOR PRIOR TO ANY LANE CLOSURE.

## TRAFFIC CONTROL PLAN 10

WORK HOURS: 8:30 A.M. TO 3:30 PM
DURATION: 1 WEEK
SCALE : 1"=40'

**APPROVED:**

CHIEF, TRAFFIC REVIEW BRANCH, D.P.P. DATE
CITY & COUNTY OF HONOLULU
(FOR WORK WITHIN CITY R.O.W. ONLY)

WILSON OKAMOTO CORPORATION
1907 South Beretania Street Suite 400
Honolulu, Hawaii, U.S.A. 96826
PH 808-946-2277 FX 808-946-2253
www.wilsonokamoto.com

PROJECT ID
QUEEN ST/ WAIMANU ST CROSSWALK IMPROVEMENTS PHASE 2
HONOLULU, HAWAII

*PREPARED FOR*
HAWAII COMMUNITY DEVELOPMENT AUTHORITY

CONSULTANT

FOR COORDINATION PURPOSES ONLY

NOT TO BE USED FOR CONSTRUCTION

| DESIGNED BY: CD | SUPERVISED BY: CL |
|---|---|
| DRAWN BY: CD | CHECKED BY: CL |
| CAD FILE: | PROJECT NO.: 10736-01 |
| SCALE: AS NOTED | DATE: JULY 19, 2023 |

| REV | DATE | DESCRIPTION |
|---|---|---|

SHEET TITLE
TRAFFIC CONTROL PLAN 10

DRAWING NO.
**TC-10**

CW4-9R
30"x24"

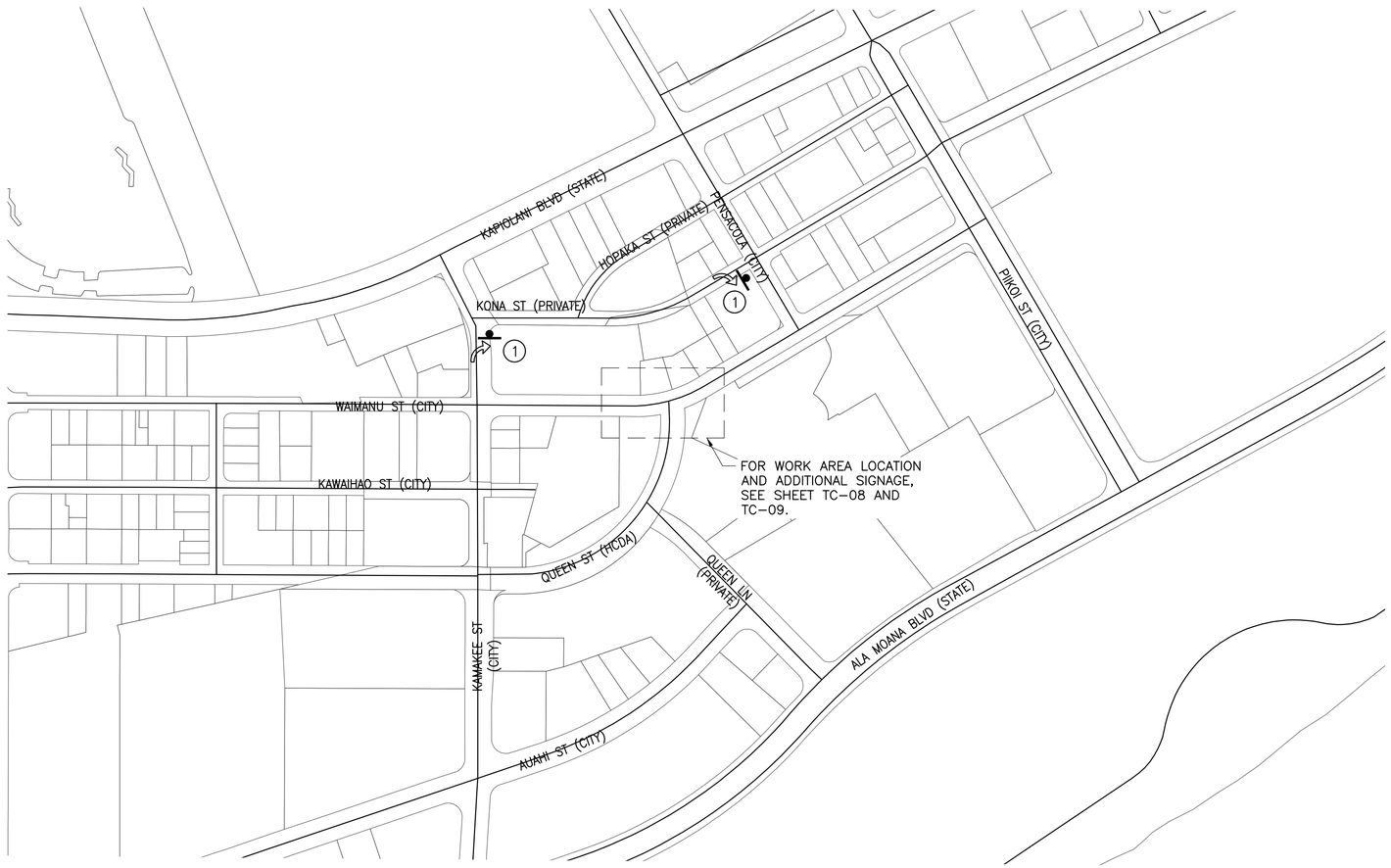


NOTES:

1. POSTED SPEED LIMIT = 25 MPH (CITY)
2. MINIMUM TRAVEL LANE WIDTH = 10'-0"
3. TEMPORARY CLOSURES TO BE PHASED AND COORDINATED WITH ANY ANTICIPATED CLOSURES ALONG ADJACENT STREETS TO ENSURE THAT CLOSURES DO NOT OVERLAP WITH ADJACENT CLOSURES AND THAT SIMULTANEOUS DETOURS ARE NOT REQUIRED.

LEGEND

SIGN

FLOW OF TRAFFIC

GRAPHIC SCALE:

200 100 0 200 400

SCALE: 1" = 200'

DETOUR PLAN 1

WORK HOURS 8:30 AM TO 3:30 PM
SCALE : 1"=200'

APPROVED:

CHIEF, TRAFFIC REVIEW BRANCH, D.P.P. DATE
CITY & COUNTY OF HONOLULU
(FOR WORK WITHIN CITY ROW ONLY)

WILSON OKAMOTO CORPORATION
1907 South Beretania Street Suite 400
Honolulu, Hawaii, U.S.A. 96826
PH 808-946-2277 FX 808-946-2253
www.wilsonokamoto.com

PROJECT ID
QUEEN ST/ WAIMANU ST CROSSWALK IMPROVEMENTS PHASE 2
HONOLULU, HAWAII

*PREPARED FOR*
HAWAII COMMUNITY DEVELOPMENT AUTHORITY

CONSULTANT

FOR COORDINATION PURPOSES ONLY

NOT TO BE USED FOR CONSTRUCTION

| | |
|---|---|
| DESIGNED BY: CD | SUPERVISED BY: CL |
| DRAWN BY: CD | CHECKED BY: CL |
| CAD FILE: | PROJECT NO.: 10736-01 |
| SCALE: AS NOTED | DATE: JULY 19, 2023 |

| REV | DATE | DESCRIPTION |
|---|---|---|

SHEET TITLE
**DETOUR PLAN 1**

DRAWING NO.
**TD-01**

# ELECTRICAL SYMBOLS

| SYMBOL | DESCRIPTION | SYMBOL | DESCRIPTION |
|---|---|---|---|
| | EXIST 84W STREET LIGHT | | ELECTRICAL METER PEDESTAL |
| | EXIST 149W STREET LIGHT | | TRAFFIC SIGNAL/CCTV CABINET |
| | NEW STREET LIGHT, 68W LED LUMINAIRE, GALVANIZED STEEL POLE, XFMR | | EXIST TRAFFIC SIGNAL/CCTV CABINET |
| | BASE & BRACKET ARM. MODEL ERL1-0-09-A5-40-A-GRAY-B-093. | | EXIST 1Ø POLE TOP TRANSFORMER |
| | NEW STREET LIGHT, 140W LED LUMINAIRE, GALVANIZED STEEL POLE, XFMR | | |
| | BASE & BRACKET ARM. MODEL ERL2-0-19-C5-40-A-GRAY-B-093. | | EXIST STREET LIGHTING PULLBOX, TYPE A |
| | NEW STREET LIGHT, 140W LED LUMINAIRE, WOOD POLE, BRACKET ARM. | | STREET LIGHTING PULLBOX, TYPE A |
| | MODEL ERL2-0-19-C5-40-A-GRAY-B-093. | | STREET LIGHTING PULLBOX, TYPE B |
| | | | |
| | EXST. ELECTRICAL POLE | | |
| | REMOVE EXST. ELECTRICAL POLE | | |
| | EXST. GUY LINE | | EXIST HTCO HANDHOLE 4'X6' |
| | GUY LINE | | |
| | EXST. GUY LINE TO BE REMOVED BY HECO | | |
| —e/oh— | EXST. OVERHEAD ELECTRICAL LINES | | HECO HANDHOLE 2'X4' |
| —t/oh— | EXST. OVERHEAD TELECOM LINES | | EXIST HECO MANHOLE 6'X14' |
| —v/oh— | EXST. OVERHEAD CATV LINES | | |
| —st/oh— | EXST. OVERHEAD STREET LIGHTING LINES | | |
| —e/oh— | EXST. OVERHEAD ELECTRICAL LINES TO BE REMOVED BY HECO | | EXIST CATV HANDHOLE 2'X4' |
| —t/oh— | EXST. OVERHEAD TELECOM LINES TO BE REMOVED BY HTCO | | EXIST CATV HANDHOLE 2'X6' |
| —v/oh— | EXST. OVERHEAD CATV LINES TO BE REMOVED BY OTWC | | |
| —st/oh— | EXST. OVERHEAD STREET LIGHTING LINES TO BE REMOVED | | ELECTRICAL DUCTLINES WITH DESIGNATORS; |
| | | | INDICATES TYPE "A" DUCT SECTION WITH "2-2E" DUCTS. |
| | CONDUIT STUB AND CAP | | SEE SHEET E301 FOR DUCT SECTIONS AND CONDUIT SCHEDULE. |
| — e — | EXST. UNDERGROUND ELECTRICAL CABLES & CONDUITS | A 2-2E | (E-ELECTRICAL, T-TELECOM, V-CATV, L-STREET LIGHTING, |
| — v — | EXST. UNDERGROUND CATV CABLES & CONDUITS | | TS-TRAFFIC SIGNAL) |
| — t — | EXST. UNDERGROUND HTCO CABLES & CONDUITS | | |
| — ts — | EXST. UNDERGROUND TRAFFIC SIGNAL CABLES & CONDUITS | 81 147 3 | NON-METERED STREET LIGHT I.D. TAG, 81 = AREA CODE NO., |
| — st — | EXST. UNDERGROUND STREET LIGHTING CABLES & CONDUITS | | 147 = LIGHT NO., 3 = POLE NO., SEE DETAIL E/E301 |
| —·— E —·— | UNDERGROUND ELECTRICAL CABLES & CONDUITS | | |
| —·— V —·— | UNDERGROUND CATV CABLES & CONDUITS | 1 | NOTE SYMBOL, SEE PLAN FOR NOTES |
| —·— T —·— | UNDERGROUND HTCO CABLES & CONDUITS | | |
| —·— TS —·— | UNDERGROUND TRAFFIC SIGNAL CABLES & CONDUITS | | |
| —·— SL —·— | UNDERGROUND STREET LIGHTING CABLES & CONDUITS | | |

# GENERAL ELECTRICAL NOTES

A. THE LOCATION OF OVERHEAD AND UNDERGROUND FACILITIES SHOWN ON THE PLANS ARE FROM EXISTING RECORDS WITH VARYING DEGREES OF ACCURACY AND ARE NOT GUARANTEED AS SHOWN. THE CONTRACTOR SHALL EXERCISE EXTREME CAUTION WHENEVER CONSTRUCTION CROSSES OR IS IN PROXIMITY OF UNDERGROUND LINES AND SHALL MAINTAIN ADEQUATE CLEARANCE WHEN OPERATING EQUIPMENT UNDER ANY OVERHEAD LINES.

B. THE CONTRACTOR IS TO COMPLY WITH THE DIRECTIONS OF THE STATE OF HAWAII OCCUPATIONAL SAFETY AND HEALTH LAW (DOSH).

C. WHEN TRENCH EXCAVATION IS ADJACENT TO EXISTING STRUCTURES OR FACILITIES, THE CONTRACTOR IS RESPONSIBLE FOR PROPERLY SHEETING AND BRACING THE EXCAVATION AND STABILIZING THE EXISTING GROUND TO RENDER IT SAFE AND SECURE FROM POSSIBLE SLIDES, CAVE-INS AND SETTLEMENT, AND FOR PROPERLY SUPPORTING EXISTING STRUCTURES AND FACILITIES WITH BEAMS, STRUTS OR UNDERPINNING TO FULLY PROTECT IT FROM DAMAGE.

D. AS REQUIRED BY THE CITY AND COUNTY OF HONOLULU, THE CONTRACTOR SHALL PROVIDE OFF-DUTY POLICE OFFICERS TO CONTROL THE FLOW OF TRAFFIC.

E. WHERE PEDESTRIAN WALKWAYS EXIST, SUCH WALKWAYS SHALL BE MAINTAINED IN PASSABLE CONDITION OR OTHER FACILITIES FOR PEDESTRIANS SHALL BE PROVIDED. PASSAGE BETWEEN WALKWAYS AT INTERSECTIONS SHALL LIKEWISE BE PROVIDED.

F. DRIVEWAYS SHALL BE KEPT OPEN UNLESS THE OWNERS OF THE PROPERTY USING THESE RIGHT-OF-WAYS ARE OTHERWISE PROVIDED FOR SATISFACTORILY.

G. THE UNDERGROUND PIPES, CABLES OR DUCTLINES KNOWN BY THE ENGINEER TO EXIST FROM HIS SEARCH OF RECORDS ARE INDICATED ON THE PLANS. THE CONTRACTOR SHALL VERIFY THE LOCATION AND DEPTH OF THE FACILITIES AND EXERCISE PROPER CARE IN EXCAVATING THE AREA. WHEREVER CONNECTIONS OF NEW UTILITIES TO EXISTING UTILITIES ARE SHOWN ON THE PLANS, THE CONTRACTOR SHALL EXPOSE THE EXISTING LINES AT THE PROPOSED CONNECTIONS TO VERIFY THEIR LOCATIONS AND DEPTHS PRIOR TO EXCAVATION FOR THE NEW LINES.

# DEPARTMENT OF DESIGN & CONSTRUCTION MECHANICAL/ELECTRICAL DIVISION NOTES:

1. THE CONTRACTOR SHALL NOTIFY THE MECHANICAL/ELECTRICAL DIVISION, DEPARTMENT OF DESIGN AND CONSTRUCTION TWO (2) WEEKS IN ADVANCE OF ANY RELOCATION OF UTILITY POLE(S) THAT MAY BE NECESSARY. (1-808-768-8431).

2. THE CONTRACTOR SHALL NOTIFY THE MECHANICAL/ELECTRICAL DIVISION, DEPARTMENT OF DESIGN AND CONSTRUCTION, THREE (3) WORKING DAYS PRIOR TO COMMENCING WORK ON THE STREET LIGHT SYSTEM. (1-808-768-8431).

3. THE STREET LIGHTING SYSTEM SHALL BE KEPT OPERATIONAL DURING CONSTRUCTION. ANY RELOCATION REQUIRED SHALL BE APPROVED BY THE MECHANICAL/ELECTRICAL DIVISION AND PAID FOR BY THE CONTRACTOR.

4. THE LOCATIONS OF THE EXISTING UNDERGROUND STREET LIGHT FACILITIES SHOWN ON THE PLANS ARE FROM EXISTING PLANS AND ARE APPROXIMATE ONLY. THE CONTRACTOR SHALL EXERCISE CAUTION WHEN CONSTRUCTION CROSSES OR IS IN CLOSE PROXIMITY TO THE EXISTING STREET LIGHT FACILITIES. THE CONTRACTOR SHALL BE RESPONSIBLE FOR ANY DAMAGES TO THE EXISTING STREET LIGHT FACILITIES. ANY AND ALL DAMAGES TO THESE FACILITIES SHALL BE REPAIRED BY THE CONTRACTOR AT HIS COST IN ACCORDANCE WITH THE REQUIREMENTS OF THE CITY AND COUNTY OF HONOLULU.

5. THE CONTRACTOR SHALL BE RESPONSIBLE FOR ANY DAMAGES TO THE CITY'S EXISTING COMMUNICATIONS FIBER OPTIC CABLE SYSTEM. ANY AND ALL DAMAGES TO THESE FACILITIES SHALL BE REPAIRED BY THE CONTRACTOR AT HIS COST IN ACCORDANCE WITH THE REQUIREMENTS OF THE CITY AND COUNTY OF HONOLULU.

6. SALVAGE AND DELIVER EXISTING STREET LIGHT STANDARD TO THE DEPARTMENT OF FACILITY MAINTENANCE BASEYARD AT MANANA AS DIRECTED BY THE STREET LIGHT INSPECTOR. CONTACT 1-808-768-5310 A MINIMUM OF TWO DAYS PRIOR TO DELIVERY.

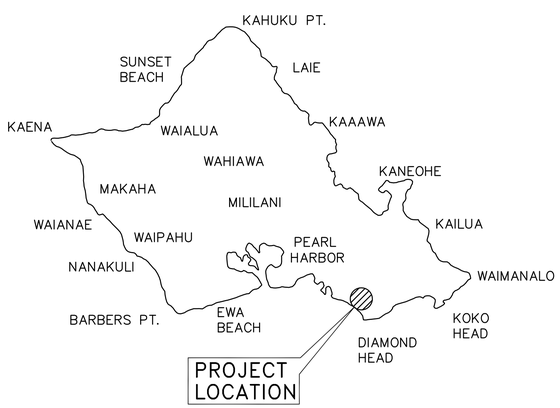


NORTH

## VICINITY MAP
## ISLAND OF OAHU
NOT TO SCALE

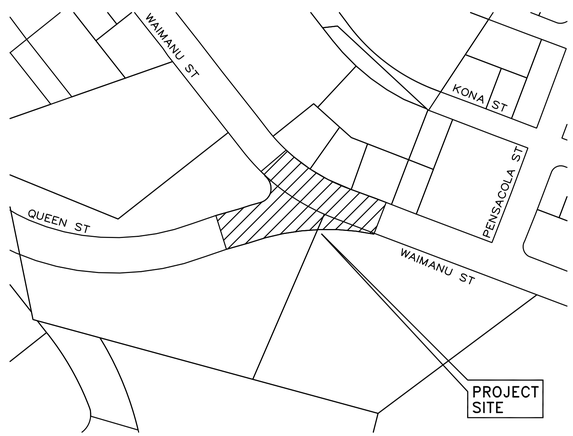


NORTH

## LOCATION MAP
NOT TO SCALE

APPROVED BY:

CHIEF, TRAFFIC REVIEW BRANCH — DATE
DEPT. OF PLANNING AND PERMITTING
CITY & COUNTY OF HONOLULU

PROGRAM ADMINISTRATOR, MECHANICAL/ELECTRICAL DIVISION, DEPT. OF DESIGN & CONSTRUCTION — DATE
CITY & COUNTY OF HONOLULU


WILSON OKAMOTO CORPORATION
1907 South Beretania Street Suite 400
Honolulu, Hawaii, U.S.A. 96826
PH 808-946-2277 FX 808-946-2253
www.wilsonokamoto.com


PROJECT ID
QUEEN ST/ WAIMANU ST CROSSWALK IMPROVEMENTS PHASE 2
HONOLULU, HAWAII

*PREPARED FOR*
HAWAII COMMUNITY DEVELOPMENT AUTHORITY

CONSULTANT
*Ronald N.S. Ho & Associates, Inc.*
*Electrical Engineers*
*2153 North King Street, Suite 201*
*Honolulu, Hawaii 96819*

FOR COORDINATION PURPOSES ONLY

NOT TO BE USED FOR CONSTRUCTION

| | |
|---|---|
| DESIGNED BY: SNS | SUPERVISED BY: SNS |
| DRAWN BY: CAD | CHECKED BY: SS |
| CAD FILE: | PROJECT NO.: 10736-01 |
| SCALE: AS NOTED | DATE: JUNE 7, 2023 |

REV DATE DESCRIPTION

SHEET TITLE
ELECTRICAL SYMBOLS, LOCATION AND VICINITY MAP

DRAWING NO.
E100

## HAWAIIAN ELECTRIC COMPANY NOTES (REV. 08/04/2021)

### 1. LOCATION OF HAWAIIAN ELECTRIC FACILITIES

THE LOCATION OF HAWAIIAN ELECTRIC'S OVERHEAD AND UNDERGROUND FACILITIES SHOWN ON THE PLANS ARE FROM EXISTING RECORDS WITH VARYING DEGREES OF ACCURACY AND ARE NOT GUARANTEED AS SHOWN. THE CONTRACTOR SHALL VERIFY IN THE FIELD THE LOCATIONS OF THE FACILITIES AND SHALL EXERCISE PROPER CARE IN EXCAVATING AND WORKING IN THE AREA. WHEREVER CONNECTIONS OF NEW UTILITIES TO EXISTING UTILITIES AND UTILITY CROSSINGS ARE SHOWN, THE CONTRACTOR SHALL EXPOSE THE EXISTING LINES AT THE PROPOSED CONNECTIONS AND CROSSINGS TO VERIFY THE DEPTHS PRIOR TO EXCAVATION FOR THE NEW LINES. THE CONTRACTOR SHALL BE RESPONSIBLE FOR ANY DAMAGES TO HAWAIIAN ELECTRIC'S FACILITIES WHETHER SHOWN OR NOT SHOWN ON THE PLANS.

### 2. COMPLIANCE WITH HAWAII OCCUPATIONAL SAFETY AND HEALTH LAWS

THE CONTRACTOR SHALL COMPLY WITH THE STATE OF HAWAII'S OCCUPATIONAL SAFETY AND HEALTH LAWS AND REGULATIONS, INCLUDING WITHOUT LIMITATION, THOSE RELATED TO WORKING ON OR NEAR EXPOSED OR ENERGIZED ELECTRICAL LINES AND EQUIPMENT.

### 3. EXCAVATION CLEARANCE

THE CONTRACTOR SHALL OBTAIN AN EXCAVATION CLEARANCE FROM HAWAIIAN ELECTRIC'S PLANNING AND DESIGN SECTION OF THE TRANSMISSION & DISTRIBUTION ENGINEERING DEPARTMENT (543-5654) LOCATED AT 820 WARD AVENUE, 4TH FLOOR, A MINIMUM OF TEN (10) WORKING DAYS PRIOR TO STARTING CONSTRUCTION.

### 4. CAUTION!! ELECTRICAL HAZARD!!

EXISTING HAWAIIAN ELECTRIC OVERHEAD AND UNDERGROUND LINES ARE ENERGIZED AND WILL REMAIN ENERGIZED DURING CONSTRUCTION UNLESS PRIOR SPECIAL ARRANGEMENTS HAVE BEEN MADE WITH HAWAIIAN ELECTRIC. ONLY HAWAIIAN ELECTRIC PERSONNEL ARE TO HANDLE THESE ENERGIZED LINES AND ERECT TEMPORARY GUARDS TO PROTECT THESE LINES FROM DAMAGE. THE CONTRACTOR SHALL WORK CAUTIOUSLY AT ALL TIMES TO AVOID ACCIDENTS AND DAMAGE TO EXISTING HAWAIIAN ELECTRIC FACILITIES, WHICH CAN RESULT IN ELECTROCUTION.

### 5. OVERHEAD LINES

STATE LAW (OSHA) REQUIRES THAT A WORKER AND THE LONGEST OBJECT HE OR SHE MAY CONTACT CANNOT COME CLOSER THAN A SPECIFIED MINIMUM RADIAL CLEARANCE WHEN WORKING CLOSE TO OR UNDER ANY OVERHEAD LINES. IT IS THE CONTRACTOR'S RESPONSIBILITY TO BE INFORMED OF AND COMPLY WITH THE LAW.

AT ANY TIME SHOULD THE CONTRACTOR ANTICIPATE THAT HIS WORK WILL RESULT IN THE NEED TO ENCROACH WITHIN THE MINIMUM REQUIRED CLEARANCE AS STATED IN THE LAW, THE CONTRACTOR SHALL NOTIFY HAWAIIAN ELECTRIC AT LEAST THREE (3) MONTHS PRIOR TO THE PLANNED ENCROACHMENT SO THAT, IF FEASIBLE, THE NECESSARY PROTECTIONS (E.G. RELOCATE OR DE-ENERGIZE HAWAIIAN ELECTRIC LINES) CAN BE INVESTIGATED. HAWAIIAN ELECTRIC MAY ALSO BE ABLE TO BLANKET ITS DISTRIBUTION (12KV AND BELOW) LINES TO PROVIDE A VISUAL AID IN PREVENTING ACCIDENTAL CONTACT. HAWAIIAN ELECTRIC'S COST OF SAFEGUARDING OR IDENTIFYING ITS LINES WILL BE CHARGED TO THE CONTRACTOR.

CONTACT HAWAIIAN ELECTRIC'S CUSTOMER RELATIONS AT 543-7070 FOR ASSISTANCE IN IDENTIFYING AND SAFEGUARDING OVERHEAD POWER LINES.

### 6. POLE BRACING

a) CONTRACTOR SHALL NOT EXCAVATE WITHIN 10 FEET OF HAWAIIAN ELECTRIC'S UTILITY POLES OR ANY ANCHOR SYSTEM SUPPORTING THE UTILITY POLE. IF CONTRACTOR MUST EXCAVATE AN AREA MORE THAN 12 INCHES DEEP BY 12 INCHES WIDE, AND CLOSER THAN 10 FEET FROM A UTILITY POLE OR ITS ANCHOR SYSTEM, EXCEPT WHEN EXCAVATING FOR RISERS IN A SINGLE TRENCH NOT WIDER THAN 12 INCHES AND NOT DEEPER THAN 3 FEET, CONTRACTOR WILL BE RESPONSIBLE FOR PROTECTING, SUPPORTING, SECURING AND TAKING ALL PRECAUTIONS TO PREVENT DAMAGE TO OR LEANING OF EXISTING POLES. BEFORE COMMENCING SUCH EXCAVATION, CONTRACTOR MUST NOTIFY HAWAIIAN ELECTRIC WHICH MAY LEAD TO IMPLEMENTING POLE BRACING REQUIREMENTS. HAWAIIAN ELECTRIC REQUIRES A MINIMUM OF TEN (10) WORKING DAYS TO CONDUCT THE REVIEW OF CONTRACTOR'S SUBMITTAL. CONTRACTOR SHALL SUBMIT ITS BRACING CALCULATIONS AND DRAWINGS, PREPARED AND STAMPED BY A LICENSED STRUCTURAL ENGINEER, TO HAWAIIAN ELECTRIC'S CUSTOMER RELATIONS (543-7070) FOR REVIEW. CONTRACTOR SHALL BE RESPONSIBLE FOR THE DESIGN, INSTALLATION, AND REMOVAL OF THE TEMPORARY POLE BRACING SYSTEM, AS WELL AS ALL COSTS INCURRED BY HAWAIIAN ELECTRIC TO REVIEW CONTRACTOR'S DRAWINGS AND TO REPAIR OR STRAIGHTEN POLES IMPACTED BY CONTRACTOR'S ACTIVITIES, INCLUDING RESPONSE AND RESTORATION COSTS INCURRED BY HAWAIIAN ELECTRIC ARISING OUT OF OR RELATED TO OUTAGES CAUSED BY CONTRACTOR'S FAILURE TO MEET THE FOREGOING REQUIREMENTS. HAWAIIAN ELECTRIC'S RECEIPT OF POLE BRACING CALCULATION OR DRAWING SUBMITTALS OF ANY CONTRACTOR, INCLUDING WORK PROCEDURE, SHALL NOT RELIEVE CONTRACTOR FROM ANY LIABILITY RESULTING FROM CONTRACTOR'S EXCAVATION NEAR OR AROUND HAWAIIAN ELECTRIC'S UTILITY POLES.

b) HAWAIIAN ELECTRIC MAY PROVIDE TO THE CUSTOMER INFORMATION RELATED TO POLE BRACING, INCLUDING CALCULATIONS AND OTHER BASIC ENGINEERING. HOWEVER, HAWAIIAN ELECTRIC PROVIDES THIS INFORMATION FOR INFORMATIONAL PURPOSES ONLY AND DOES NOT WARRANT ANY OF THE INFORMATION PROVIDED TO CUSTOMER. HAWAIIAN ELECTRIC HEREBY DISCLAIMS ANY LIABILITY ASSOCIATED WITH THE CUSTOMER'S USE OF INFORMATION PROVIDED TO THE CUSTOMER FROM HAWAIIAN ELECTRIC. IT IS THE CUSTOMER'S DUTY TO OBTAIN ENGINEERING FROM ITS OWN ENGINEER OR CONTRACTOR IN ORDER TO BRACE POLES AND THE USE OF HAWAIIAN ELECTRIC'S INFORMATION DOES NOT EXCUSE THE CUSTOMER FROM PERFORMING ITS OWN EVALUATION OF THE BRACING NEEDS. SHOULD THE CUSTOMER INSTALL BRACING AT ANY POLE LOCATION, CUSTOMER SHALL DEFEND, INDEMNIFY AND HOLD HARMLESS HAWAIIAN ELECTRIC FROM ANY THIRD PARTY CLAIMS ASSOCIATED WITH THE CUSTOMER'S BRACING OF A POLE. SHOULD THE WORK CUSTOMER PERFORM AT OR NEAR THE POLE LOCATION COMPROMISE THE POLE OR ITS SURROUNDINGS IN ANY WAY, CUSTOMER SHALL RESTORE OR REPLACE THE POLE SO THAT IT IS NO LONGER COMPROMISED.

### 7. UNDERGROUND LINES

THE CONTRACTOR SHALL EXERCISE EXTREME CAUTION WHENEVER CONSTRUCTION CROSSES OR IS IN CLOSE PROXIMITY OF UNDERGROUND LINES. HAWAIIAN ELECTRIC'S EXISTING ELECTRICAL CABLES ARE ENERGIZED AND WILL REMAIN ENERGIZED DURING CONSTRUCTION. ONLY HAWAIIAN ELECTRIC PERSONNEL ARE TO BREAK INTO EXISTING HAWAIIAN ELECTRIC FACILITIES, HANDLE THESE CABLES, AND ERECT TEMPORARY GUARDS TO PROTECT THESE CABLES FROM DAMAGE. THE COST OF HAWAIIAN ELECTRIC'S ASSISTANCE IN PROVIDING PROPER SUPPORT AND PROTECTION OF ITS UNDERGROUND LINES WILL BE CHARGED TO THE CONTRACTOR. FOR ASSISTANCE/COORDINATION IN PROVIDING PROPER SUPPORT AND PROTECTION OF THESE LINES, THE CONTRACTOR SHALL CALL HAWAIIAN ELECTRIC'S CUSTOMER RELATIONS AT 543-7070 A MINIMUM OF TEN (10) WORKING DAYS IN ADVANCE.

SPECIAL PRECAUTIONS ARE REQUIRED WHEN EXCAVATING NEAR HAWAIIAN ELECTRIC'S 138KV OR 46KV UNDERGROUND LINES (SEE HAWAIIAN ELECTRIC INSTRUCTIONS TO CONSULTANTS/CONTRACTORS ON "EXCAVATION NEAR HAWAIIAN ELECTRIC'S UNDERGROUND 138KV AND/OR 46KV LINES" FOR DETAILED REQUIREMENTS).

FOR VERIFICATION OF UNDERGROUND LINES, THE CONTRACTOR SHALL CALL THE HAWAII ONE CALL CENTER AT 866-423-7287 MINIMUM OF FIVE (5) WORKING DAYS IN ADVANCE.

### 8. UNDERGROUND FUEL PIPELINES

THE CONTRACTOR SHALL EXERCISE EXTREME CAUTION WHENEVER CONSTRUCTION CROSSES OR IS IN CLOSE PROXIMITY OF HAWAIIAN ELECTRIC'S UNDERGROUND FUEL OIL PIPELINES. SPECIAL PRECAUTIONS ARE REQUIRED WHEN EXCAVATING NEAR HAWAIIAN ELECTRIC'S UNDERGROUND FUEL OIL PIPELINES (SEE HAWAIIAN ELECTRIC'S SPECIFIC FUEL PIPELINE "GUIDELINES" TO CONSULTANTS/CONTRACTORS ON EXCAVATION NEAR HAWAIIAN ELECTRIC'S UNDERGROUND FUEL PIPELINES FOR DETAILED REQUIREMENTS).

### 9. EXCAVATIONS

WHEN TRENCH EXCAVATION IS ADJACENT TO OR BENEATH HAWAIIAN ELECTRIC'S EXISTING STRUCTURES OR FACILITIES, THE CONTRACTOR IS RESPONSIBLE FOR:

a) ARRANGING FOR HAWAIIAN ELECTRIC STANDBY PERSONNEL TO OBSERVE WORK AT CONTRACTOR'S COST.
b) SHEETING, BRACING, OR OTHERWISE SUPPORTING THE EXCAVATION AND STABILIZING THE EXISTING GROUND TO RENDER IT SAFE AND SECURE AND TO PREVENT POSSIBLE SLIDES, CAVE-INS, AND SETTLEMENTS.
c) PROPERLY SUPPORTING EXISTING STRUCTURES OR FACILITIES WITH BEAMS, STRUTS, UNDER-PINNINGS, OR OTHER NECESSARY METHODS TO FULLY PROTECT IT FROM DAMAGE.
d) BACKFILLING WITH PROPER BACKFILL MATERIAL INCLUDING SPECIAL THERMAL BACKFILL WHERE EXISTING (REFER TO ENGINEERING DIVISION FOR THERMAL BACKFILL SPECIFICATIONS).

### 10. RELOCATION OF HAWAIIAN ELECTRIC FACILITIES

ANY WORK REQUIRED TO RELOCATE OR MODIFY HAWAIIAN ELECTRIC FACILITIES SHALL BE DONE BY HAWAIIAN ELECTRIC, OR BY THE CONTRACTOR UNDER HAWAIIAN ELECTRIC'S SUPERVISION. THE CONTRACTOR SHALL BE RESPONSIBLE FOR ALL COORDINATION, AND SHALL PROVIDE NECESSARY SUPPORT FOR HAWAIIAN ELECTRIC'S WORK, WHICH MAY INCLUDE, BUT NOT BE LIMITED TO, STAKING OF POLE/ANCHOR LOCATIONS, IDENTIFYING RIGHT OF WAY AND PROPERTY LINES, EXCAVATION AND BACKFILL, PERMITS AND TRAFFIC CONTROL, BARRICADING, AND RESTORATION OF PAVEMENT, SIDEWALKS, AND OTHER FACILITIES.

ALL COSTS ASSOCIATED WITH ANY RELOCATION OR MODIFICATION (EITHER TEMPORARY OR PERMANENT) FOR THE CONVENIENCE OF THE CONTRACTOR, OR TO ENABLE THE CONTRACTOR TO PERFORM HIS WORK IN A SAFE AND EXPEDITIOUS MANNER IN FULFILLING HIS CONTRACT OBLIGATIONS SHALL BE BORNE BY THE CONTRACTOR.

### 11. CONFLICTS

ANY REDESIGN OR RELOCATION OF HAWAIIAN ELECTRIC'S FACILITIES NOT SHOWN ON THE PLANS MAY BE CAUSE FOR LENGTHY DELAYS. THE CONTRACTOR ACKNOWLEDGES THAT HAWAIIAN ELECTRIC IS NOT RESPONSIBLE FOR ANY DELAY OR DAMAGE THAT MAY ARISE AS A RESULT OF ANY CONFLICTS DISCOVERED OR IDENTIFIED WITH RESPECT TO THE LOCATION OR CONSTRUCTION OF HAWAIIAN ELECTRIC'S ELECTRICAL FACILITIES IN THE FIELD, REGARDLESS OF WHETHER THE CONTRACTOR HAS MET THE REQUESTED MINIMUM ADVANCE NOTICES. IN ORDER TO MINIMIZE ANY DELAY OR IMPACT ARISING FROM SUCH CONFLICTS, HAWAIIAN ELECTRIC SHOULD BE NOTIFIED IMMEDIATELY UPON DISCOVERY OR IDENTIFICATION OF SUCH CONFLICT.

### 12. DAMAGE TO HAWAIIAN ELECTRIC FACILITIES

THE CONTRACTOR SHALL BE RESPONSIBLE FOR THE PROTECTION OF ALL HAWAIIAN ELECTRIC SURFACE AND SUBSURFACE UTILITIES AND SHALL BE RESPONSIBLE FOR ANY DAMAGES TO HAWAIIAN ELECTRIC'S FACILITIES AS A RESULT OF HIS OPERATIONS. THE CONTRACTOR SHALL IMMEDIATELY REPORT SUCH DAMAGES OR ANY HAZARDOUS CONDITIONS RELATED TO HAWAIIAN ELECTRIC'S LINES TO HAWAIIAN ELECTRIC'S TROUBLE DISPATCHER AT 548-7961. REPAIR WORK SHALL BE DONE BY HAWAIIAN ELECTRIC OR BY THE CONTRACTOR UNDER HAWAIIAN ELECTRIC'S SUPERVISION. COSTS FOR DAMAGES TO HAWAIIAN ELECTRIC'S FACILITIES SHALL BE BORNE BY THE CONTRACTOR.

IN CASE OF DAMAGE OR SUSPECTED DAMAGE TO HAWAIIAN ELECTRIC'S FUEL PIPELINE, THE CONTRACTOR SHALL IMMEDIATELY NOTIFY HAWAIIAN ELECTRIC'S SECURITY COMMAND CENTER AT 543-7685 (A 24-HOUR NUMBER) SO HAWAIIAN ELECTRIC PERSONNEL CAN SECURE THE DAMAGED SECTION AND REPORT ANY OIL SPILLS TO THE PROPER AUTHORITIES. ALL COSTS ASSOCIATED WITH THE DAMAGE, REPAIR, AND OIL SPILL CLEANUP SHALL BE BORNE BY THE CONTRACTOR.

### 13. HAWAIIAN ELECTRIC STAND-BY PERSONNEL

THE CONTRACTOR MAY REQUEST HAWAIIAN ELECTRIC TO PROVIDE AN INSPECTOR TO STAND-BY DURING CONSTRUCTION NEAR HAWAIIAN ELECTRIC'S FACILITIES. THE COST OF SUCH INSPECTION WILL BE CHARGED TO THE CONTRACTOR.

THE CONTRACTOR SHALL CALL HAWAIIAN ELECTRIC'S CUSTOMER RELATIONS AT 543-7070 A MINIMUM OF THREE (3) MONTHS IN ADVANCE TO ARRANGE FOR HAWAIIAN ELECTRIC STAND-BY PERSONNEL.

### 14. CLEARANCES

THE FOLLOWING CLEARANCES SHALL BE MAINTAINED BETWEEN HAWAIIAN ELECTRIC'S DUCTLINE AND ALL ADJACENT STRUCTURES (CHARTED AND UNCHARTED) IN THE TRENCH:

**GUIDELINES FOR MINIMUM HORIZONTAL (PARALLEL) CLEARANCES BETWEEN HAWAIIAN ELECTRIC AND OTHER UNDERGROUND UTILITIES**

| UNDERGROUND UTILITY | HAWAIIAN ELECTRIC DIRECT BURIED CABLE | HAWAIIAN ELECTRIC DIRECT BURIED IN CONDUIT (NO CONCRETE ENCASEMENT) | HAWAIIAN ELECTRIC (MINIMUM) CONCRETE ENCASEMENT | APPLICABLE NOTES: |
|---|---|---|---|---|
| HAWAIIAN ELECTRIC DB CONDUITS | 12" | 3" | 0" | |
| HAWAIIAN ELECTRIC 3" ENCASEMENT | 0" | 0" | 0" | |
| TELEPHONE/CATV DB | 12" | 12" | 6" | |
| TELEPHONE/CATV DB DUCTS | 12" | 12" | 6" | |
| TELEPHONE/CATV 3" ENCASEMENT | 0" | 0" | 0" | 5 |
| TRAFFIC SIGNAL | 12" | 12" | 12" | |
| WATER DB (BWS OWNED) | 36" | 36" | 36" | 1, 4 |
| CUSTOMER OWNED WATER SERVICE LATERALS | 12" | 12" | 12" | |
| WATER (CONCRETE JACKETED) (BWS OWNED) | 36" | 36" | 36" | 1, 4 |
| GAS DB | 12" | 12" | 12" | 1 |
| GAS (CONCRETE JACKETED) | 12" | 12" | 12" | 1 |
| SEWER DB | 36" | 36" | 36" | 1, 2 |
| SEWER (CONCRETE JACKETED) | 36" | 36" | 36" | 1, 2 |
| DRAIN | 12" | 12" | 12" | 1 |
| FUEL PIPELINES | | | | 3 |

NOTES:

1. WHERE SPACE IS AVAILABLE, PARALLEL CLEARANCE TO OTHER UTILITIES, OR FOREIGN STRUCTURES OTHER THAN COMMUNICATION OR TRAFFIC SIGNAL SHALL BE 36"
2. IF 36" CLEARANCE CANNOT BE MET:
   - IF CLEARANCE IS LESS THAN 12", JACKET SEWER LINE WITH REINFORCED CONCRETE (PER HAWAIIAN ELECTRIC'S STD. 30-1030) FOR A DISTANCE OF 5' PLUS PIPE DIAMETER.
   - IF CLEARANCE IS BETWEEN 12" AND 36", JACKET SEWER LINE WITH PLAIN CONCRETE.
3. ALL FUEL PIPELINE CROSSINGS SHALL BE REVIEWED AND APPROVED BY THE COMPANY THAT OWNS AND MAINTAINS IT.
4. 5 FEET CLEAR TO WATER MAINS 16" OR LARGER.
5. FOR SITUATIONS WITH 0" MINIMUM SEPARATION, A 6" SEPARATION IS RECOMMENDED.
6. CLEARANCES MEASURED FROM OUTER EDGES OR DIAMETERS OF UTILITIES. WHENEVER CONCRETE JACKETS ARE INVOLVED, CLEARANCES SHALL BE TOTAL CLEAR DISTANCE BETWEEN THE CONCRETE JACKET AND UTILITY CONCERNED.

**GUIDELINES FOR MINIMUM VERTICAL (CROSSING) CLEARANCES HAWAIIAN ELECTRIC AND OTHER UNDERGROUND UTILITIES**

| UNDERGROUND UTILITY | HAWAIIAN ELECTRIC DIRECT BURIED CABLE | HAWAIIAN ELECTRIC DIRECT BURIED IN CONDUIT (NO CONCRETE ENCASEMENT) | HAWAIIAN ELECTRIC (MINIMUM) CONCRETE ENCASEMENT | APPLICABLE NOTES: |
|---|---|---|---|---|
| HAWAIIAN ELECTRIC DB CONDUITS | 6" | 3" | 0" | |
| HAWAIIAN ELECTRIC 3" ENCASEMENT | 0" | 0" | 0" | |
| TELEPHONE/CATV DB | 12" | 12" | 6" | |
| TELEPHONE/CATV DB DUCTS | 12" | 12" | 6" | |
| TELEPHONE/CATV 3" ENCASEMENT | 0" | 0" | 0" | 3 |
| TRAFFIC SIGNAL | 12" | 12" | 6" | |
| WATER DB (BWS OWNED) | 12" | 12" | 12" | 5 |
| CUSTOMER OWNED WATER SERVICE LATERALS | 6" | 6" | 6" | |
| WATER (CONCRETE JACKETED) (BWS OWNED) | 12" | 12" | 12" | 5 |
| GAS DB | 12" | 12" | 12" | |
| GAS (CONCRETE JACKETED) | 12" | 12" | 12" | |
| SEWER DB | 24" | 24" | 24" | 1 |
| SEWER (CONCRETE JACKETED) | 24" | 24" | 24" | 1 |
| DRAIN | 12" | 12" | 6" | |
| FUEL PIPELINES | | | | 2 |

NOTES:

1. IF CLEARANCE CANNOT BE MET:
   - IF CLEARANCE IS LESS THAN 12", JACKET SEWER LINE WITH REINFORCED CONCRETE (PER HAWAIIAN ELECTRIC'S STD. 30-1030) FOR A DISTANCE OF 5' PLUS PIPE DIAMETER.
   - IF CLEARANCE IS BETWEEN 12" AND 24", JACKET SEWER LINE WITH PLAIN CONCRETE.
2. ALL FUEL PIPELINE CROSSINGS SHALL BE REVIEWED AND APPROVED BY THE COMPANY THAT OWNS AND MAINTAINS IT.
3. FOR SITUATIONS WITH 0" MINIMUM SEPARATION, A 6" SEPARATION IS RECOMMENDED.
4. CLEARANCES MEASURED FROM OUTER EDGES OR DIAMETERS OF UTILITIES. WHENEVER CONCRETE JACKETS ARE INVOLVED, CLEARANCES SHALL BE TOTAL CLEAR DISTANCE BETWEEN THE CONCRETE JACKET AND UTILITY CONCERNED.
5. 36" CLEARANCE IS REQUIRED FOR TRENCHLESS INSTALLATION WORK.

THE CONTRACTOR SHALL NOTIFY THE CONSTRUCTION MANAGER & HAWAIIAN ELECTRIC OF ANY HEAT SOURCES (POWER CABLE DUCT BANK, STEAMLINE, ETC.) ENCOUNTERED THAT ARE NOT PROPERLY IDENTIFIED ON THE DRAWING.

### 15. INDEMNITY

THE CONTRACTOR SHALL INDEMNIFY, DEFEND AND HOLD HARMLESS HAWAIIAN ELECTRIC FROM AND AGAINST ALL LOSSES, DAMAGES, CLAIMS, AND ACTIONS, INCLUDING BUT NOT LIMITED TO REASONABLE ATTORNEY'S FEES AND COSTS BASED UPON OR ARISING OUT OF DAMAGE TO PROPERTY OR INJURIES TO PERSONS, OR OTHER TORTIOUS ACTS CAUSED OR CONTRIBUTED TO BY CONTRACTOR OR ANYONE ACTING UNDER ITS DIRECTION OR CONTROL OR ON ITS BEHALF; PROVIDED CONTRACTOR'S INDEMNITY SHALL NOT BE APPLICABLE TO ANY LIABILITY BASED UPON THE SOLE NEGLIGENCE OF HAWAIIAN ELECTRIC.

## ADDITIONAL NOTES WHEN WORK INVOLVES CONSTRUCTION OF HAWAIIAN ELECTRIC FACILITIES

### 16. SCHEDULE

CONTRACTOR SHALL FURNISH HIS CONSTRUCTION SCHEDULE SIX (6) MONTHS PRIOR TO STARTING WORK ON HAWAIIAN ELECTRIC FACILITIES. CONTRACTOR SHALL GIVE HAWAIIAN ELECTRIC, IN WRITING, THREE (3) MONTHS NOTICE TO PROCEED WITH HAWAIIAN ELECTRIC'S PORTION OF WORK.

### 17. AUTHORITY

ALL CONSTRUCTION, RESTORATION WORK, AND INSPECTION SHALL BE SUBJECT TO WHICHEVER GOVERNMENTAL AGENCY HAS AUTHORITY OVER THE WORK.

### 18. SPECIFICATIONS

CONSTRUCTION OF HAWAIIAN ELECTRIC'S UNDERGROUND FACILITIES SHALL BE CONSTRUCTED IN ACCORDANCE WITH THE LATEST REVISIONS OF HAWAIIAN ELECTRIC SPECIFICATIONS CS7001, CS7003, CS7202, CS9301, AND CS9401 AND APPLICABLE HAWAIIAN ELECTRIC STANDARDS.

### 19. CONSTRUCTION

CONTRACTOR SHALL FURNISH ALL LABOR, MATERIALS, EQUIPMENT, AND SERVICES TO PROPERLY PERFORM AND FULLY COMPLETE ALL WORK SHOWN ON THE CONTRACT, DRAWINGS, AND SPECIFICATIONS. ALL MATERIALS SHALL BE NEW AND MANUFACTURED IN THE UNITED STATES OF AMERICA. ALL MANHOLE, HANDHOLE, AND DUCTLINE INSTALLATIONS SHALL BE INSPECTED AND APPROVED BY HAWAIIAN ELECTRIC PRIOR TO EXCAVATION AND PRIOR TO PLACING CONCRETE. CONTRACTOR SHALL NOTIFY HAWAIIAN ELECTRIC'S INSPECTION GROUP AT 543-2567 AT LEAST FIVE (5) WORKING DAYS PRIOR TO INSTALLING FACILITIES OR PLACING CONCRETE.

CONTRACTOR TO COORDINATE WORK TO BREAK INTO HAWAIIAN ELECTRIC'S EXISTING ELECTRICAL FACILITIES WITH HAWAIIAN ELECTRIC'S INSPECTION GROUP AT 543-2567 AT LEAST TEN (10) WORKING DAYS IN ADVANCE.

### 20. STAKEOUT

THE CONTRACTOR SHALL ARRANGE FOR TONEOUTS OF ALL UNDERGROUND FACILITIES AND SHALL STAKEOUT ALL PROPOSED HAWAIIAN ELECTRIC FACILITIES WITHIN THE PROJECT AREA SO AS TO NOT CONFLICT WITH ANY UTILITY (EXISTING OR PROPOSED) AND ANY PROPOSED CONSTRUCTION OR IMPROVEMENT WORK FOR VERIFICATION BY HAWAIIAN ELECTRIC BEFORE PROCEEDING WITH HAWAIIAN ELECTRIC WORK.

### 21. DUCTLINES

ALL DUCTLINE INSTALLATIONS SHALL BE PVC SCHEDULE 40 ENCASED IN CONCRETE, UNLESS OTHERWISE NOTED. ALL COMPLETED DUCTLINES SHALL BE MANDREL TESTED BY THE CONTRACTOR IN THE PRESENCE OF HAWAIIAN ELECTRIC'S INSPECTOR USING HAWAIIAN ELECTRIC'S STANDARD PRACTICE. THE CONTRACTOR SHALL INSTALL 1800# TENSILE STRENGTH MULETAPE PULL LINE IN ALL COMPLETED DUCTLINES AFTER MANDREL TESTING IS COMPLETE.

### 22. JOINT POLE REMOVAL

THE LAST JOINT POLE OCCUPANT OFF THE POLES SHALL REMOVE THE POLES.

### 23. AS-BUILT PLANS

THE CONTRACTOR SHALL PROVIDE HAWAIIAN ELECTRIC WITH A SET OF ELECTRONIC AND HARD COPY PLANS OF EACH SHEET SHOWING THE OFFSETS, STATIONING, AND VERTICAL ELEVATION OF THE DUCT LINE(S) CONSTRUCTED.


WILSON OKAMOTO CORPORATION
1907 South Beretania Street Suite 400
Honolulu, Hawaii, U.S.A. 96826
PH 808-946-2277 FX 808-946-2253
www.wilsonokamoto.com


PROJECT ID
QUEEN ST/ WAIMANU ST CROSSWALK IMPROVEMENTS PHASE 2
HONOLULU, HAWAII

*PREPARED FOR*
HAWAII COMMUNITY DEVELOPMENT AUTHORITY


CONSULTANT
*Ronald N.S. Ho & Associates, Inc.*
*Electrical Engineers*
*2153 North King Street, Suite 201*
*Honolulu, Hawaii 96819*


FOR COORDINATION PURPOSES ONLY

NOT TO BE USED FOR CONSTRUCTION

| | |
|---|---|
| DESIGNED BY: SNS | SUPERVISED BY: SNS |
| DRAWN BY: CAD | CHECKED BY: SS |
| CAD FILE: | PROJECT NO.: 10736-01 |
| SCALE: AS NOTED | DATE: JUNE 7, 2023 |

| REV | DATE | DESCRIPTION |
|---|---|---|

SHEET TITLE
HECO NOTES

DRAWING NO.
E101

GENERAL NOTE(S):

1. SEE CIVIL PLANS FOR TRAFFIC SIGNAL INTERSECTION WORK.

NOTE(S):

1. EXIST HECO MH "E2" 6'X14'
2. EXIST HECO MH "E3" 6'X14'
3. REMOVE EXISTING 84W LED LUMINAIRE AND REPLACE WITH 140W LED LUMINAIRE IN PLACE. RECONNECT EXISTING LIGHT GRID NODE AND COORDINATE REPROGRAMMING WITH JCI.

**QUEEN STREET WAIMANU STREET CROSSWALK IMPROVEMENTS**

**STREET LIGHT SCHEDULE (REMOVAL)**

| AREA CODE METER NO. | LIGHT NUMBER | POLE NUMBER | STREET | WATTAGE |
|---|---|---|---|---|
| 81 | 473 | 13 | Waimanu Street (City) | 84 |

**QUEEN STREET WAIMANU STREET CROSSWALK IMPROVEMENTS**

**STREET LIGHT SCHEDULE (NEW)**

| AREA CODE METER NO. | LIGHT NUMBER | POLE NUMBER | STREET | WATTAGE |
|---|---|---|---|---|
| 81 | 473 | 13 | Waimanu Street (City) | 140 |
| 81 | 463X | 3X | Queen Street (City) | 140 |

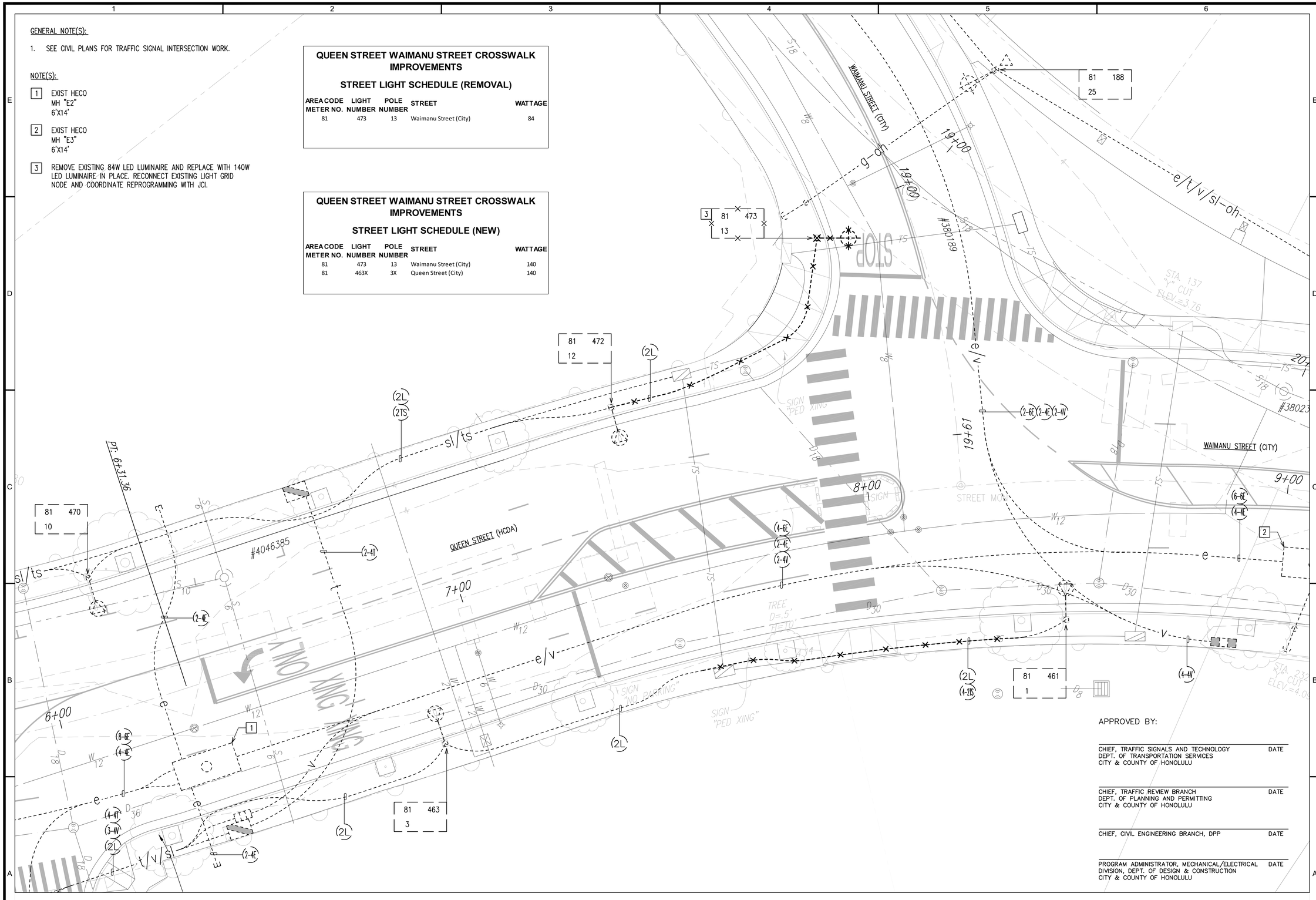


APPROVED BY:

CHIEF, TRAFFIC SIGNALS AND TECHNOLOGY — DATE
DEPT. OF TRANSPORTATION SERVICES
CITY & COUNTY OF HONOLULU

CHIEF, TRAFFIC REVIEW BRANCH — DATE
DEPT. OF PLANNING AND PERMITTING
CITY & COUNTY OF HONOLULU

CHIEF, CIVIL ENGINEERING BRANCH, DPP — DATE

PROGRAM ADMINISTRATOR, MECHANICAL/ELECTRICAL — DATE
DIVISION, DEPT. OF DESIGN & CONSTRUCTION
CITY & COUNTY OF HONOLULU

NORTH

# ELECTRICAL PARTIAL DEMOLITION PLAN 1

SCALE: 1"=10'

10' 5' 0 10' 20'
SCALE: 1"=10'
GRAPHIC SCALE


WILSON OKAMOTO CORPORATION
1907 South Beretania Street Suite 400
Honolulu, Hawaii, U.S.A. 96826
PH 808-946-2277 FX 808-946-2253
www.wilsonokamoto.com


PROJECT ID
QUEEN ST/ WAIMANU ST CROSSWALK IMPROVEMENTS PHASE 2
HONOLULU, HAWAII

*PREPARED FOR*
HAWAII COMMUNITY DEVELOPMENT AUTHORITY

CONSULTANT

Ronald N.S. Ho & Associates, Inc.
*Electrical Engineers*
*2153 North King Street, Suite 201*
*Honolulu, Hawaii 96819*


FOR COORDINATION PURPOSES ONLY

NOT TO BE USED FOR CONSTRUCTION

| DESIGNED BY: | SUPERVISED BY: |
|---|---|
| SNS | SNS |
| DRAWN BY: CAD | CHECKED BY: SS |
| CAD FILE: | PROJECT NO.: 10736-01 |
| SCALE: AS NOTED | DATE: JUNE 7, 2023 |

| REV | DATE | DESCRIPTION |
|---|---|---|

SHEET TITLE
ELECTRICAL PARTIAL DEMOLITION PLAN

DRAWING NO.
E102

| CURVE DATA | | | | | | |
|---|---|---|---|---|---|---|
| ID | Δ | Δ / 2 | RADIUS | T | C | Lc |
| 1 | 34°47'48" | 17°23'54.0" | 12.50' | 3.92' | 7.48' | 7.59' |
| 2 | 5°53'41" | 2°56'50.7" | 67.20' | 3.46' | 6.91' | 6.91' |
| 3 | 32°29'33" | 16°14'46.6" | 17.98' | 5.24' | 10.06' | 10.20' |
| 4 | 28°15'18" | 14°7'38.9" | 20.61' | 5.19' | 10.06' | 10.16' |
| 5 | 34°57'22" | 17°28'40.8" | 3.87' | 1.22' | 2.32' | 2.36' |
| 6 | 26°21'0" | 13°10'30.2" | 5.37' | 1.26' | 2.45' | 2.47' |
| 7 | 22°57'52" | 11°28'55.8" | 32.20' | 6.54' | 12.82' | 12.90' |
| 8 | 10°15'35" | 5°7'47.7" | 135.64' | 12.18' | 24.26' | 24.29' |
| 9 | 31°1'19" | 15°30'39.6" | 30.25' | 8.40' | 16.18' | 16.38' |

| DUCTLINE 1 CURVE DATA | | | | | | |
|---|---|---|---|---|---|---|
| ID | Δ | Δ / 2 | RADIUS | T | C | Lc |
| 1 | 34°47'48" | 17°23'54.0" | 12.50' | 3.92' | 7.48' | 7.59' |
| 2 | 5°53'41" | 2°56'50.7" | 67.20' | 3.46' | 6.91' | 6.91' |
| 3 | 32°29'33" | 16°14'46.6" | 17.98' | 5.24' | 10.06' | 10.20' |
| 4 | 28°15'18" | 14°7'38.9" | 20.61' | 5.19' | 10.06' | 10.16' |
| 5 | 34°57'22" | 17°28'40.8" | 3.87' | 1.22' | 2.32' | 2.36' |

| DUCTLINE 2 CURVE DATA | | | | | | |
|---|---|---|---|---|---|---|
| 6 | 26°21'0" | 13°10'30.2" | 5.37' | 1.26' | 2.45' | 2.47' |

| DUCTLINE 3 CURVE DATA | | | | | | |
|---|---|---|---|---|---|---|
| 7 | 22°57'52" | 11°28'55.8" | 32.20' | 6.54' | 12.82' | 12.90' |
| 8 | 10°15'35" | 5°7'47.7" | 135.64' | 12.18' | 24.26' | 24.29' |
| 9 | 31°1'19" | 15°30'39.6" | 30.25' | 8.40' | 16.18' | 16.38' |

GENERAL NOTE(S):

1. SEE CIVIL PLANS FOR TRAFFIC SIGNAL INTERSECTION WORK.

NOTE(S):

1. EXIST HECO MH "E2" 6'X14'
2. EXIST HECO MH "E3" 6'X14'
3. EXPOSE AND INTERCEPT EXISTING STREET LIGHTING CONDUIT AND CABLES WITH NEW TYPE B PULLBOX. COORDINATE WORK & OUTAGES TO MAINTAIN PROPER ROADWAY ILLUMINATION.
4. EXTEND NEW CONDUIT FROM NEW TYPE A PULLBOX TO INTERCEPT EXISTING STREET LIGHTING CONDUIT. REMOVE EXISTING STREET LIGHT CONDUCTORS. PULL APPROXIMATELY 160' OF CONDUCTORS BETWEEN STREET LIGHTS #461 AND #463. COORDINATE WORK & OUTAGES TO MAINTAIN PROPER ROADWAY ILLUMINATION.
5. REMOVE EXISTING 84W LED LUMINAIRE AND REPLACE WITH 140W LED LUMINAIRE IN PLACE. RECONNECT EXISTING LIGHT GRID NODE AND COORDINATE REPROGRAMMING WITH JCI.

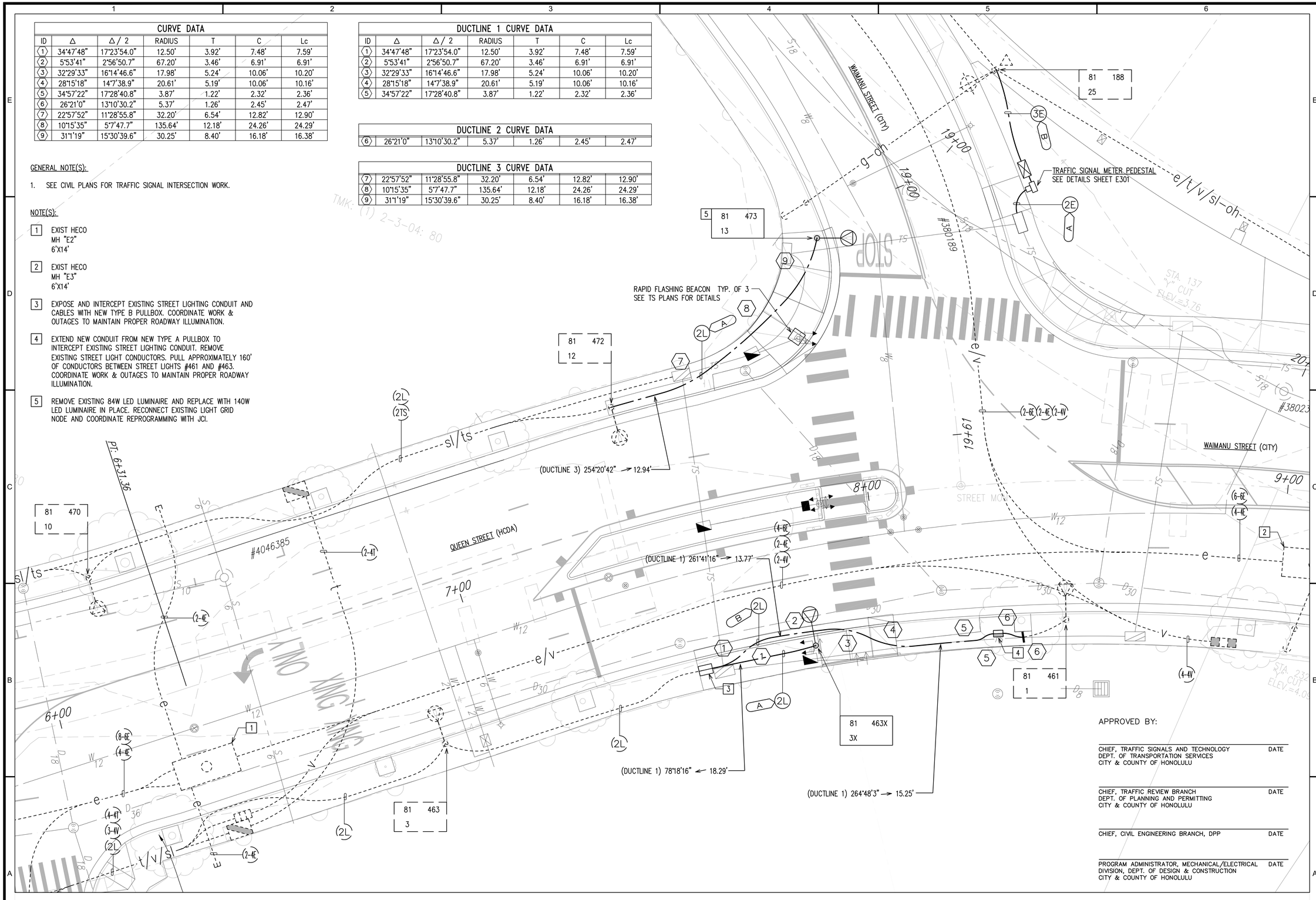


APPROVED BY:

CHIEF, TRAFFIC SIGNALS AND TECHNOLOGY — DATE
DEPT. OF TRANSPORTATION SERVICES
CITY & COUNTY OF HONOLULU

CHIEF, TRAFFIC REVIEW BRANCH — DATE
DEPT. OF PLANNING AND PERMITTING
CITY & COUNTY OF HONOLULU

CHIEF, CIVIL ENGINEERING BRANCH, DPP — DATE

PROGRAM ADMINISTRATOR, MECHANICAL/ELECTRICAL — DATE
DIVISION, DEPT. OF DESIGN & CONSTRUCTION
CITY & COUNTY OF HONOLULU

NORTH

# ELECTRICAL PARTIAL PLAN 1

SCALE: 1"=10'

10' 5' 0 10' 20'
SCALE: 1"=10'
GRAPHIC SCALE


WILSON OKAMOTO CORPORATION
1907 South Beretania Street Suite 400
Honolulu, Hawaii, U.S.A. 96826
PH 808-946-2277 FX 808-946-2253
www.wilsonokamoto.com


PROJECT ID
QUEEN ST/ WAIMANU ST CROSSWALK IMPROVEMENTS PHASE 2
HONOLULU, HAWAII

PREPARED FOR
HAWAII COMMUNITY DEVELOPMENT AUTHORITY


CONSULTANT
Ronald N.S. Ho & Associates, Inc.
Electrical Engineers
2153 North King Street, Suite 201
Honolulu, Hawaii 96819


FOR COORDINATION PURPOSES ONLY

NOT TO BE USED FOR CONSTRUCTION

| DESIGNED BY: SNS | SUPERVISED BY: SNS |
|---|---|
| DRAWN BY: CAD | CHECKED BY: SS |
| CAD FILE: | PROJECT NO.: 10736-01 |
| SCALE: AS NOTED | DATE: JUNE 7, 2023 |

| REV | DATE | DESCRIPTION |
|---|---|---|

SHEET TITLE
ELECTRICAL PARTIAL PLAN

DRAWING NO.
E201

NOTE(S):

1. PROVIDE A MINIMUM OF 4 FEET CLEAR AND LEVEL WORKSPACE CLEARANCE IN FRONT OF METERING AND SERVICE EQUIPMENT.
2. PROVIDE PERMANENT IDENTIFICATION LABELS FOR ALL METER SOCKETS TO IDENTIFY THE UNIT OR SPACE SERVED.
3. * INDICATES PROVISION FOR SEAL BY HECO.
4. HECO'S SERVICE CONDUCTORS SHALL BE SEPARATED BY SUITABLE BARRIERS FROM THE CUSTOMER'S LOAD CONDUCTORS. ALSO, THE CUSTOMER'S LOAD SHALL NOT PASS THROUGH HECO'S SEALABLE SECTION OR COMPARTMENTS.
5. PROVIDE AND INSTALL METER SOCKET COVERS (PLASTIC) AND BANDS FOR ALL BLANK METER SOCKETS. IDENTIFY COVERS SO COVERS CAN BE RETURNED.
6. GROUND AND BOND PER NEC.
7. HECO SEALABLE NEMA 3R.
8. WARNING LABELS ARE REQUIRED ON THE EQUIPMENT PER THE LATEST ANSI Z535 REQUIREMENTS AND SHALL BE PLACED ON THE EXTERIOR FRONT PANEL OF THE METER SECTION HINGED COVER AND THE PULL SECTION COVER (PANEL FRONTING THE LANDING LUGS). "HAZARDOUS VOLTAGE EXISTS INSIDE" "UNAUTHORIZED PERSONS KEEP OUT"
9. COLOR GRAY ANSI 61 UNLESS OTHERWISE SPECIFIED.
10. POLYESTER POWDER-COATED FINISH EXCEEDS ASTM B-117 SPECIFICATIONS.

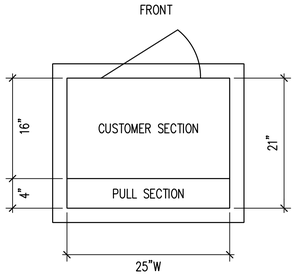


ELEVATION

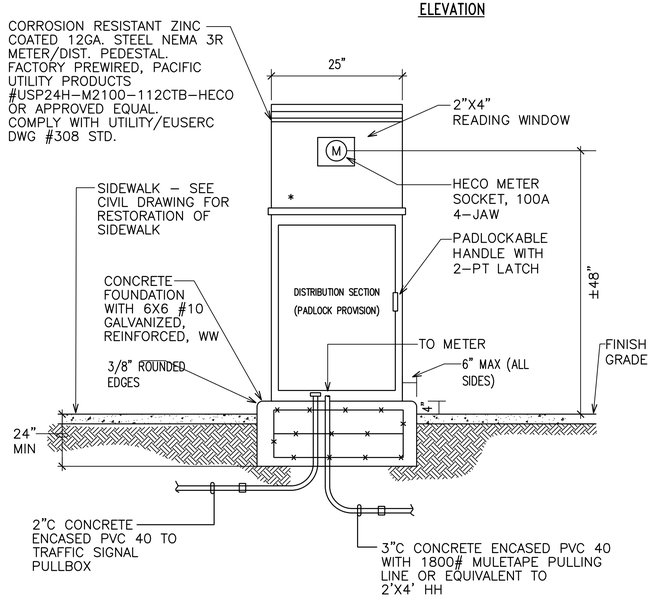


ELEVATION

## TRAFFIC SIGNAL SERVICE EQUIPMENT MOUNTING DETAIL

A / E301 NOT TO SCALE

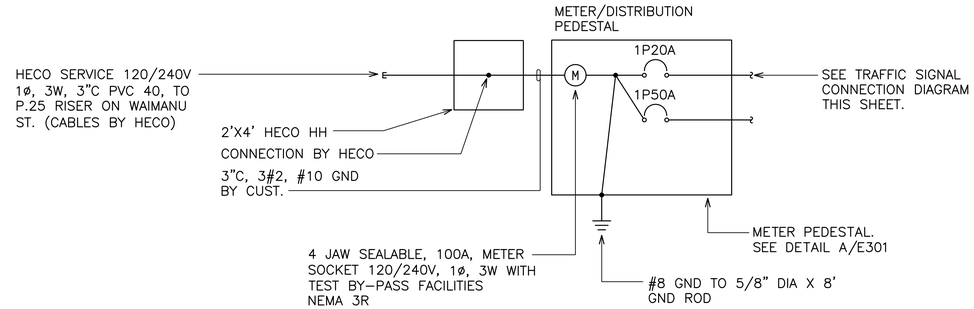


## QUEEN STREET AND WAIMANU STREET TRAFFIC SIGNAL ONE-LINE DIAGRAM

B / E301 NOT TO SCALE

## CONDUIT SCHEDULE

| | |
|---|---|
| 1 | EXIST TS CONDUIT WITH NEW 2#14, #14 GND |
| 2 | EXIST TS CONDUIT WITH NEW 6#14, #14 GND |
| 3 | EXIST TS CONDUIT WITH NEW 16#14, #14 GND |
| 4 | 2"C, 2#14, #14 GND |
| 5 | 2"C, 10#14, #14 GND |
| 6 | 2"C, 18#14, #14 GND |
| 7 | 3/4"C, 4#14, #14 GND |
| 8 | 3/4"C, 2#14, #14 GND |

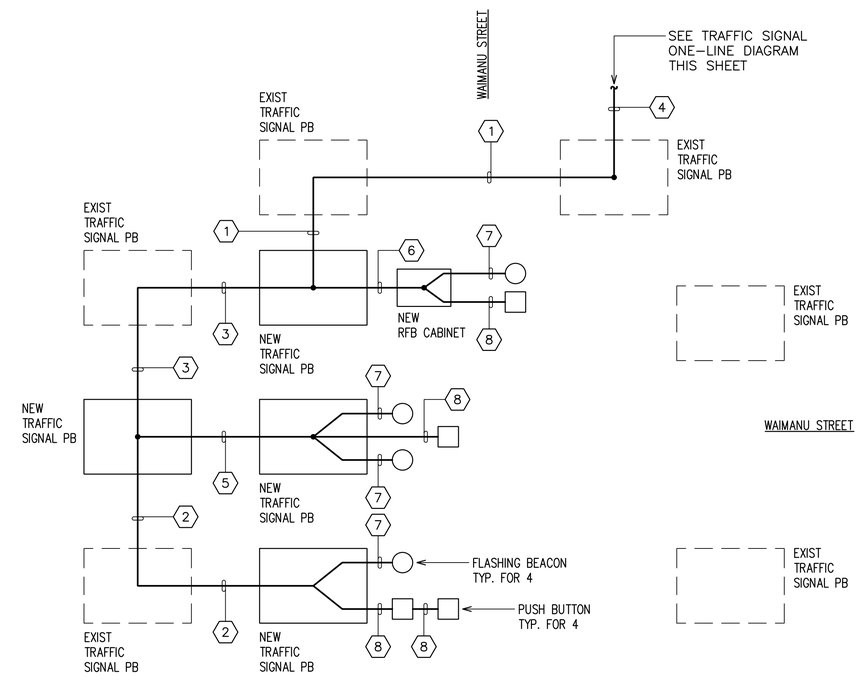


## TRAFFIC SIGNAL CONNECTION DIAGRAM

C / E301 NOT TO SCALE

DRAWING REVIEW

Reviewed for Hawaiian Electric Company's Facilities Only

Req#_____ By_____ Date _____

Customer Installations Department Hawaiian Electric Company, Inc.

Hawaiian Electric Company's review of these drawings shall in no way relieve the Customer, its Consultant, its Contractor or anyone acting on the Customer's behalf from the responsibility for engineering design, materials and any other liability associated with this project.

APPROVED BY:

CHIEF, TRAFFIC SIGNALS AND TECHNOLOGY — DATE
DEPT. OF TRANSPORTATION SERVICES
CITY & COUNTY OF HONOLULU

CHIEF, TRAFFIC REVIEW BRANCH — DATE
DEPT. OF PLANNING AND PERMITTING
CITY & COUNTY OF HONOLULU


WILSON OKAMOTO CORPORATION
1907 South Beretania Street Suite 400
Honolulu, Hawaii, U.S.A. 96826
PH 808-946-2277 FX 808-946-2253
www.wilsonokamoto.com


PROJECT ID
QUEEN ST/ WAIMANU ST CROSSWALK IMPROVEMENTS PHASE 2
HONOLULU, HAWAII

*PREPARED FOR*
HAWAII COMMUNITY DEVELOPMENT AUTHORITY

CONSULTANT
*Ronald N.S. Ho & Associates, Inc.*
*Electrical Engineers*
*2153 North King Street, Suite 201*
*Honolulu, Hawaii 96819*

FOR COORDINATION PURPOSES ONLY

NOT TO BE USED FOR CONSTRUCTION

| | |
|---|---|
| DESIGNED BY: SNS | SUPERVISED BY: SNS |
| DRAWN BY: CAD | CHECKED BY: SS |
| CAD FILE: | PROJECT NO.: 10736-01 |
| SCALE: AS NOTED | DATE: JUNE 7, 2023 |

REV DATE DESCRIPTION

SHEET TITLE
TRAFFIC SIGNAL DETAILS

DRAWING NO.
E301

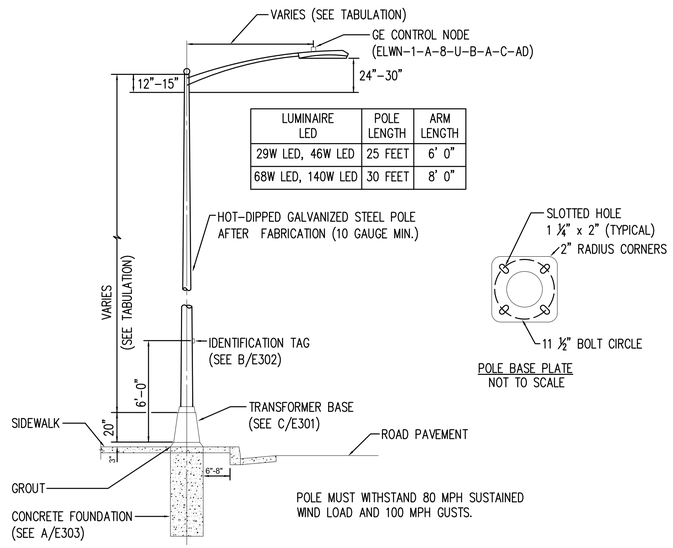


| LUMINAIRE LED | POLE LENGTH | ARM LENGTH |
|---|---|---|
| 29W LED, 46W LED | 25 FEET | 6' 0" |
| 68W LED, 140W LED | 30 FEET | 8' 0" |

## A / E302 TYPE "A" STREET LIGHT STANDARD DETAIL

NOT TO SCALE

C & C

NOTES:

1. USE 2 PLY LAMINATED FLEXIBLE PLASTIC, BLACK-WHITE THICKNESS: BLACK CAP SHEET – 0.010", WHITE BASE SHEET – 0.052".
2. AREA CODE NUMBER AND LIGHT NUMBER SIZE SHALL BE ⅝" HIGH, ⅛" STROKE, WHITE IN COLOR (NUMBER AS REQUIRED).
3. POLE NUMBER SIZE SHALL BE ¼" HIGH, 1/16" STROKE, WHITE IN COLOR (NUMBER AS REQUIRED).
4. ATTACH TO ALUMINUM AND STEEL POLES WITH NUMBER 8 STAINLESS STEEL, ½" LONG DRIVE SCREWS IN ⅛" DRILL HOLE. ATTACH TO WOOD POLES WITH 4D HOT-DIPPED GALVANIZED STEEL NAILS.
5. NUMBERS AREA INSCRIBED BY CUTTING THROUGH 'BLACK CAP SHEET" TO EXPOSE "WHITE LETTERS".

*6. ATTACH TO POLE WITH ⅝" STAINLESS STEEL STRAP WITH BUCKLE. (FOR MOUNTING ON HECO STEEL POLE OR CONCRETE POLE).

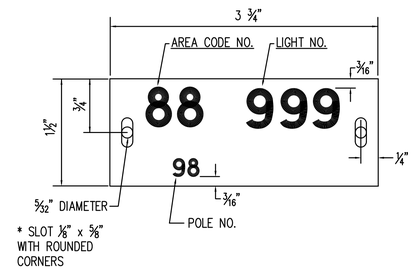


## B / E302 STREET LIGHT I.D. TAG DETAIL

NOT TO SCALE

## DEPARTMENT OF DESIGN & CONSTRUCTION, CITY AND COUNTY OF HONOLULU STREET LIGHTING NOTES:

1. REFER TO DRAWING E102 (STREET LIGHT SCHEDULES) FOR HAWAIIAN ELECTRIC COMPANY INC. (HECO) AREA CODE NO.'S AND STREET LIGHT NUMBERS.
2. PRIMARY SERVICE CABLES AND CONNECTION TO STREET LIGHT TRANSFORMER TERMINALS SHALL BE PROVIDED BY HECO AND PAID FOR BY CONTRACTOR (MULTIPLE SYSTEM).
3. CONTRACTOR SHALL BE RESPONSIBLE FOR COORDINATING AND INFORMING HECO THAT STREET LIGHT TRANSFORMER IS AT PROJECT SITE, PRIOR TO INSTALLATION OF HECO CABLES.
4. CONTRACTOR SHALL NOTIFY AND COORDINATE WORK WITH MECHANICAL/ELECTRICAL DIVISION, DEPARTMENT OF DESIGN AND CONSTRUCTION, CITY & COUNTY OF HONOLULU, 72 HOURS IN ADVANCE OF STREET LIGHT SYSTEM (PHONE NO. 808-768-8431).
5. ALL LUMINAIRES SHALL BE LED TYPE WITH WATTAGE AND IES TYPE II LIGHT DISTRIBUTION.
6. SEE THIS SHEET AND SHEET E303 FOR TYPICAL CONSTRUCTION DETAILS. ALSO, REFER TO APPLICABLE STANDARD DETAILS OF THE MECHANICAL/ELECTRICAL DIVISION, DEPARTMENT OF DESIGN AND CONSTRUCTION, CITY & COUNTY OF HONOLULU
7. CONTRACTOR SHALL STENCIL THE DATE OF INSTALLATION ON THE BOTTOM OF PHOTO CELL.
8. LUMINAIRE & POLE COUNT:

| | | |
|---|---|---|
| POLES: | 30'-0" | = 1 |
| LUMINAIRES: | 140W | = 2 |

9. CONTRACTOR SHALL MAINTAIN ONE SET OF APPROVED PLANS AT THE PROJECT SITE AT ALL TIMES DURING CONSTRUCTION WORK.
10. CONTRACTOR SHALL ARRANGE FOR HECO TO ENERGIZE STREET LIGHTS A MINIMUM OF SIX HOURS FOR FINAL INSPECTION & ACCEPTANCE. CONTRACTOR SHALL PAY FOR ALL TESTING COSTS.
11. FINAL ACCEPTANCE INSPECTION WILL BE UNDERTAKEN ONLY AFTER ALL WORK HAS BEEN COMPLETED & THE "AS-BUILT" TRACINGS HAVE BEEN SUBMITTED TO THE DEPARTMENT OF DESIGN & CONSTRUCTION, CITY & COUNTY OF HONOLULU.
12. AFTER COMPLETION OF FINAL INSPECTION WITH THE ENGINEER AND THE DEPARTMENT OF DESIGN & CONSTRUCTION, CONTRACTOR SHALL OBTAIN WRITTEN ACCEPTANCE OF STREET LIGHT SYSTEM FROM THE MECHANICAL/ELECTRICAL DIVISION, DEPARTMENT OF DESIGN & CONSTRUCTION, CITY & COUNTY OF HONOLULU.
13. THE CONTRACTOR SHALL MEASURE AND RECORD THE GROUND RESISTANCE AT EACH STANDARD WITH NO EXTERNAL GROUND WIRES CONNECTED TO THE GROUND ROD. CONTRACTOR SHALL SCHEDULE GROUND RESISTANCE MEASUREMENTS 48 HOURS IN ADVANCE AND SHALL NOT PROCEED WITH MEASUREMENTS UNTIL APPROVAL IS GRANTED. SCHEDULES ARE SUBJECT TO CHANGE DEPENDING UPON WEATHER CONDITIONS. REPORTS SHALL INCLUDE NAME OF PERSONNEL CONDUCTING THE TEST, METER TYPE AND SERIAL NUMBER, DATE OF TEST AND SOIL CONDITIONS. TEST RESULTS SHALL BE CERTIFIED BY THE CONTRACTOR AND SUBMITTED TO THE MECHANICAL/ELECTRICAL DIVISION, DEPT OF DESIGN & CONSTRUCTION, CITY & COUNTY OF HONOLULU.
14. CONTRACTOR SHALL NOT BACKFILL TRENCHES UNTIL APPROVAL IS GRANTED BY THE STREET LIGHT INSPECTOR. ALL CONCRETE WORK SHALL BE SCHEDULED AT LEAST 24 HOURS IN ADVANCE. CONCRETE SHALL NOT BE POURED UNTIL APPROVAL IS GRANTED BY THE STREET LIGHT INSPECTOR.
15. SUBMIT SHOP DRAWINGS FOR ALL STREET LIGHT COMPONENTS, INCLUDING PULLBOXES, FOR APPROVAL.
16. COAT ALL ANCHOR BOLTS, NUTS AND WASHERS WITH GREASE OR "THREDE-EZE" BY CHEMSEARCH.
17. WHEN REPLACING PULLBOXES, INSTALL PULLBOXES SO THAT COVERS ARE LEVEL WITH CURB OR SIDEWALK GRADE OR 1 INCH ABOVE EXISTING BARE GROUND (OR 6 INCHES ABOVE LANDSCAPING).

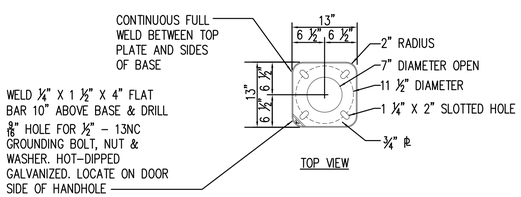


TOP VIEW

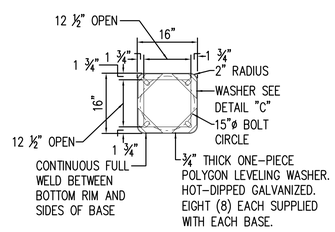


SECTION A

NOTES:

1. ALL STEEL SHALL CONFORM TO THE REQUIREMENTS OF ASTM A36 STEEL.
2. ALL WELDS SHALL BE PERFORMED BY A CERTIFIED WELDER. ALL VERTICAL WELDS ON THE SIDES OF THE BASE SHALL BE CONTINUOUS AND MACHINE WELDED.
3. BOLTS FOR BOLTING POLE FLANGE SHALL INCLUDE 4-1" X 3 ½" HEX BOLTS WITH NUT AND WASHER. ALL HARDWARE SHALL BE HOT-DIPPED GALVANIZED.
4. ENTIRE ASSEMBLY SHALL BE HOT-DIPPED GALVANIZED AFTER FABRICATION.
5. SUBMIT SHOP DRAWING FOR REVIEW & APPROVAL PRIOR TO FABRICATION.
6. PROGRESSIVE FRAME & FABRICATION BY ENCON FABRICATION ITEM TB13-16 CCH OR APPROVED SUBSTITUTE.

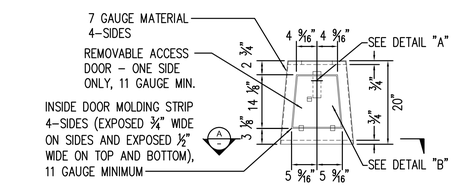


SIDE VIEW

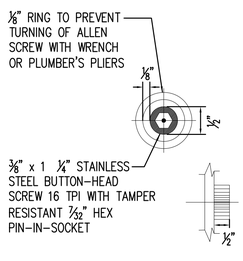


1 DETAIL "A" NOT TO SCALE

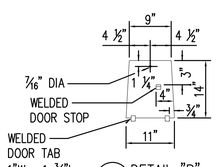


2 DETAIL "B" NOT TO SCALE

(BACK VIEW OF DOOR)

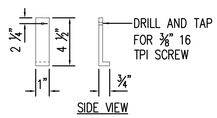


SIDE VIEW

¼" THICK HOT-DIPPED GALVANIZED FLAT BAR. NO COLD GALVANIZING.

3 LOCKING BAR NOT TO SCALE

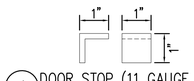

4 DOOR STOP (11 GAUGE MIN.) NOT TO SCALE

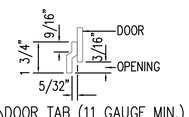


5 DOOR TAB (11 GAUGE MIN.) NOT TO SCALE

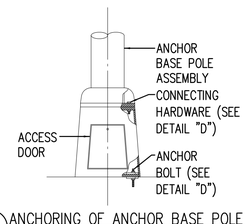


6 ANCHORING OF ANCHOR BASE POLE ASSEMBLY ON TRANSFORMER BASE NOT TO SCALE

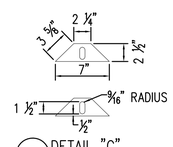


7 DETAIL "C" NOT TO SCALE

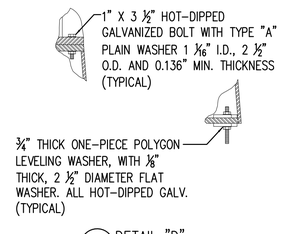


8 DETAIL "D" NOT TO SCALE

## C / E302 STANDARD TRANSFORMER BASE DETAIL

NOT TO SCALE

APPROVED BY:

CHIEF, TRAFFIC REVIEW BRANCH — DATE
DEPT. OF PLANNING AND PERMITTING
CITY & COUNTY OF HONOLULU

PROGRAM ADMINISTRATOR, MECHANICAL/ELECTRICAL DIVISION, DEPT. OF DESIGN & CONSTRUCTION — DATE
CITY & COUNTY OF HONOLULU


WILSON OKAMOTO CORPORATION
1907 South Beretania Street Suite 400
Honolulu, Hawaii, U.S.A. 96826
PH 808-946-2277 FX 808-946-2253
www.wilsonokamoto.com


PROJECT ID
QUEEN ST/ WAIMANU ST CROSSWALK IMPROVEMENTS PHASE 2
HONOLULU, HAWAII

*PREPARED FOR*
HAWAII COMMUNITY DEVELOPMENT AUTHORITY

CONSULTANT
*Ronald N.S. Ho & Associates, Inc.*
*Electrical Engineers*
*2153 North King Street, Suite 201*
*Honolulu, Hawaii 96819*

FOR COORDINATION PURPOSES ONLY

NOT TO BE USED FOR CONSTRUCTION

| | |
|---|---|
| DESIGNED BY: SNS | SUPERVISED BY: SNS |
| DRAWN BY: CAD | CHECKED BY: SS |
| CAD FILE: | PROJECT NO.: 10736-01 |
| SCALE: AS NOTED | DATE: JUNE 7, 2023 |

| REV | DATE | DESCRIPTION |
|---|---|---|

SHEET TITLE
STREET LIGHTING DETAILS 1

DRAWING NO.
E302

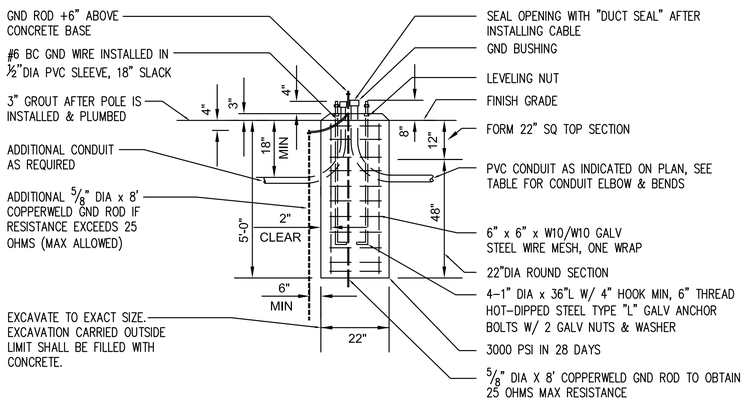


SECTION A

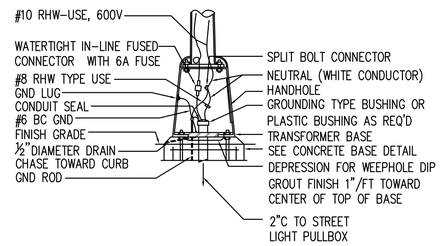


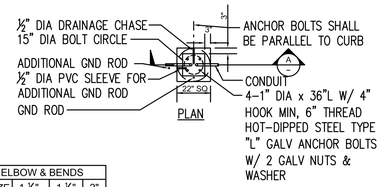


| PVC 40 OR 80 ELBOW & BENDS | | | |
|---|---|---|---|
| NOMINAL CONDUIT SIZE | 1-¼" | 1-½" | 2" |
| MINIMUM RADIUS BEND | 8" | 10" | 12" |

## A / E303 TYPICAL FOUNDATION DETAIL TRANSFORMER BASE

NOT TO SCALE

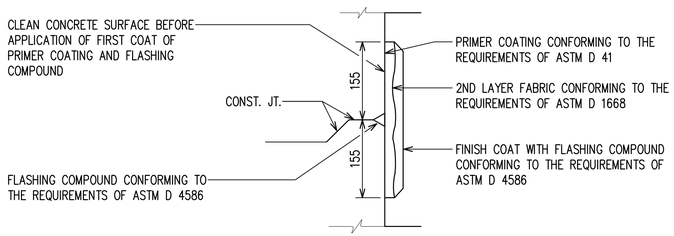


## C / E303 TYPICAL FLASHING COMPOUND WATERPROOFING DETAILS

NOT TO SCALE

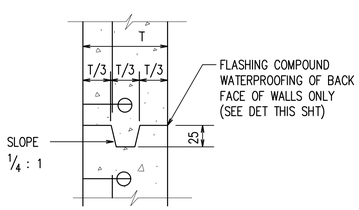


## E / E303 TYPICAL CONSTRUCTION JOINT DETAIL

NOT TO SCALE

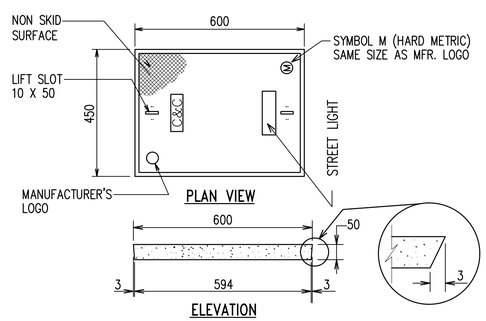


## D / E303 POLYMER CONCRETE COVER

NOT TO SCALE

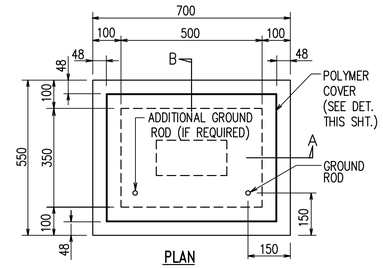


PLAN

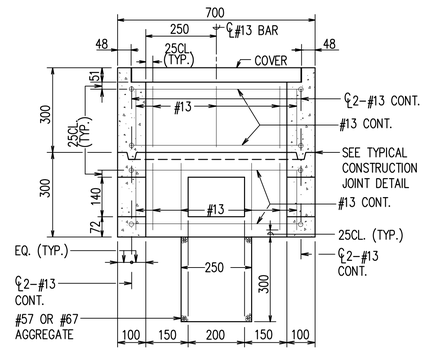


SECTION A-A

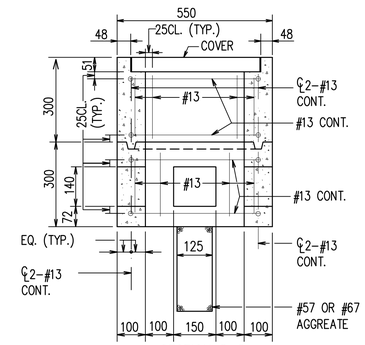


SECTION B-B

## B / E303 TYPE "A" PULLBOX (OLD TYPE "B")

NOT TO SCALE

APPROVED BY:

CHIEF, TRAFFIC REVIEW BRANCH — DATE
DEPT. OF PLANNING AND PERMITTING
CITY & COUNTY OF HONOLULU

PROGRAM ADMINISTRATOR, MECHANICAL/ELECTRICAL — DATE
DIVISION, DEPT. OF DESIGN & CONSTRUCTION
CITY & COUNTY OF HONOLULU


WILSON OKAMOTO CORPORATION
1907 South Beretania Street Suite 400
Honolulu, Hawaii, U.S.A. 96826
PH 808-946-2277 FX 808-946-2253
www.wilsonokamoto.com


PROJECT ID
QUEEN ST/ WAIMANU ST CROSSWALK IMPROVEMENTS PHASE 2
HONOLULU, HAWAII

*PREPARED FOR*
HAWAII COMMUNITY DEVELOPMENT AUTHORITY

CONSULTANT
*Ronald N.S. Ho & Associates, Inc.*
*Electrical Engineers*
*2153 North King Street, Suite 201*
*Honolulu, Hawaii 96819*

FOR COORDINATION PURPOSES ONLY

NOT TO BE USED FOR CONSTRUCTION

| DESIGNED BY: SNS | SUPERVISED BY: SNS |
|---|---|
| DRAWN BY: CAD | CHECKED BY: SS |
| CAD FILE: | PROJECT NO.: 10736-01 |
| SCALE: AS NOTED | DATE: JUNE 7, 2023 |

| REV | DATE | DESCRIPTION |
|---|---|---|

SHEET TITLE
STREET LIGHTING DETAILS 2

DRAWING NO.
E303

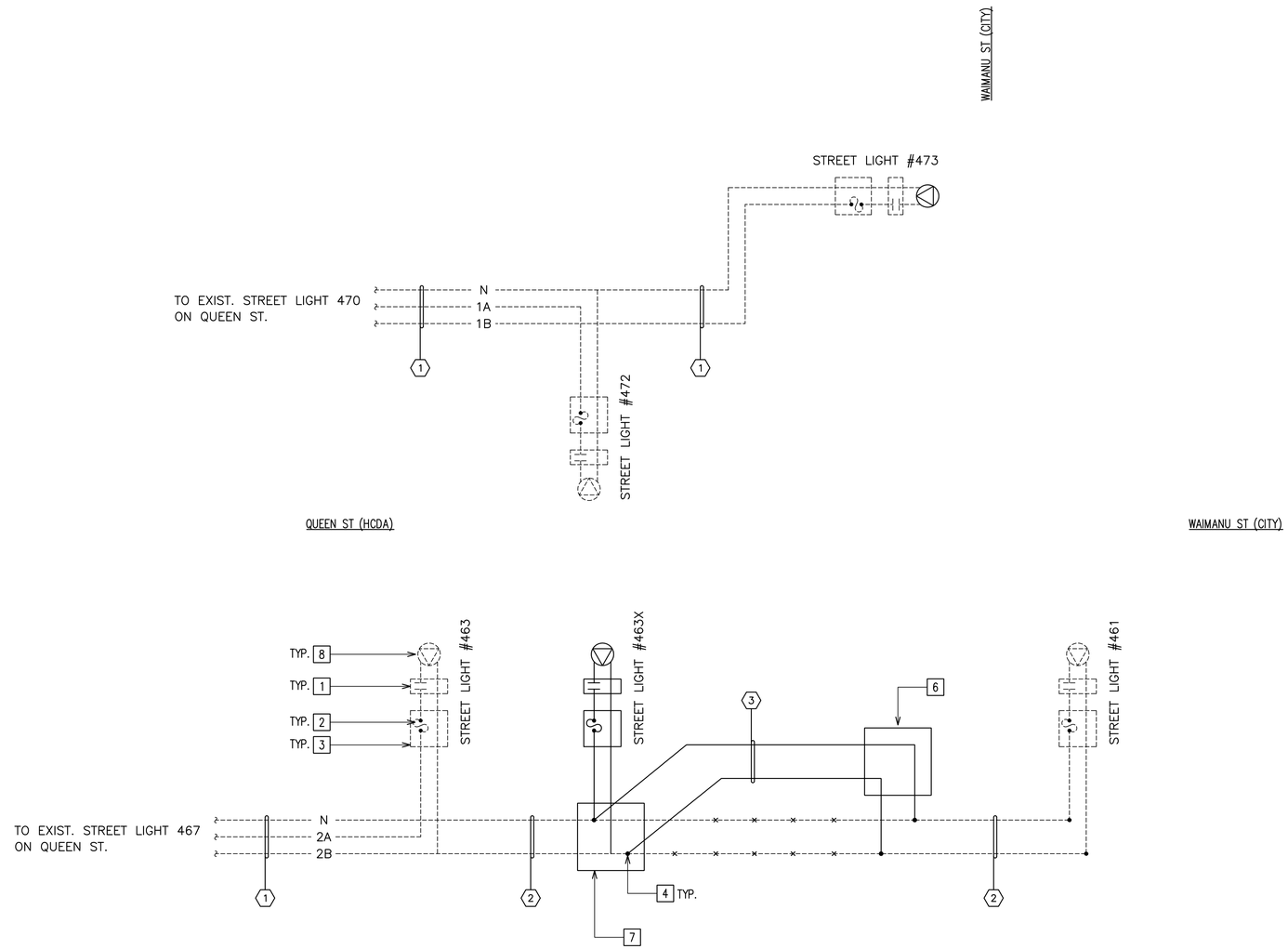


## STREET LIGHT CONDUIT & WIRE SCHEDULE

| ITEM | DESCRIPTION |
|---|---|
| 1 | EXIST 2"C W/ 3#4 RHW-USE, #4 GND |
| 2 | EXIST 2"C W/ NEW 3#4 RHW-USE, #4 GND |
| 3 | 2"C, 3#4 RHW-USE, #4 GND |
| | |
| | |

Notes:

1. GE LIGHT GRID NODE RATED FOR 120V OPERATION, ELWN-0-A-5 -U-G-5
2. WEATHERPROOF FUSED CONNECTOR KIT WITH 6A FUSES.
3. TRANSFORMER BASE
4. INSULATED SPLIT BOLT CONNECTION WEATHERPROOF.
5. WEATHERPROOF IN-LINE FUSE, 15A
6. TYPE A STREET LIGHT PULLBOX
7. TYPE B STREET LIGHT PULLBOX
8. 120V, 149W LED LUMINAIRE
9. 120V, 84W LED LUMINAIRE
10. SERVICE TAP

# STREET LIGHT CONNECTION DIAGRAM

NOT TO SCALE

APPROVED BY:

CHIEF, TRAFFIC SIGNALS AND TECHNOLOGY — DATE
DEPT. OF TRANSPORTATION SERVICES
CITY & COUNTY OF HONOLULU

CHIEF, TRAFFIC REVIEW BRANCH — DATE
DEPT. OF PLANNING AND PERMITTING
CITY & COUNTY OF HONOLULU

PROGRAM ADMINISTRATOR, MECHANICAL/ELECTRICAL — DATE
DIVISION, DEPT. OF DESIGN & CONSTRUCTION
CITY & COUNTY OF HONOLULU

WILSON OKAMOTO CORPORATION
1907 South Beretania Street Suite 400
Honolulu, Hawaii, U.S.A. 96826
PH 808-946-2277 FX 808-946-2253
www.wilsonokamoto.com

PROJECT ID
QUEEN ST/ WAIMANU ST CROSSWALK IMPROVEMENTS PHASE 2
HONOLULU, HAWAII

*PREPARED FOR*
HAWAII COMMUNITY DEVELOPMENT AUTHORITY

CONSULTANT
*Ronald N.S. Ho & Associates, Inc.*
*Electrical Engineers*
*2153 North King Street, Suite 201*
*Honolulu, Hawaii 96819*

FOR COORDINATION PURPOSES ONLY

NOT TO BE USED FOR CONSTRUCTION

| DESIGNED BY: SNS | SUPERVISED BY: SNS |
|---|---|
| DRAWN BY: CAD | CHECKED BY: SS |
| CAD FILE: | PROJECT NO.: 10736-01 |
| SCALE: AS NOTED | DATE: JUNE 7, 2023 |

| REV | DATE | DESCRIPTION |
|---|---|---|

SHEET TITLE
STREET LIGHTING CONNECTION DIAGRAM

DRAWING NO.
E304

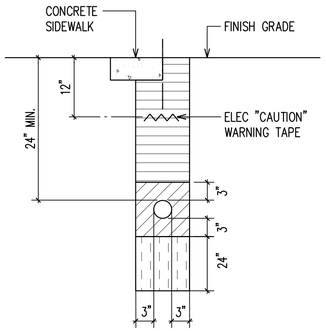


SECTION (A)

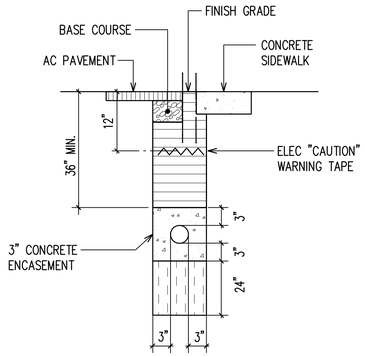


SECTION (B)

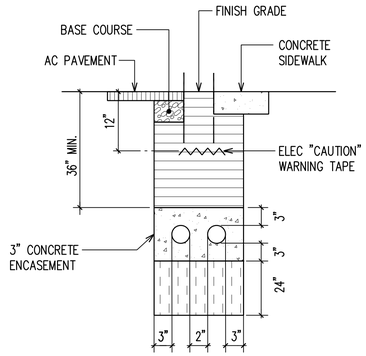


SECTION (C)

## A / E401 TYPICAL DUCT SECTIONS

NOT TO SCALE

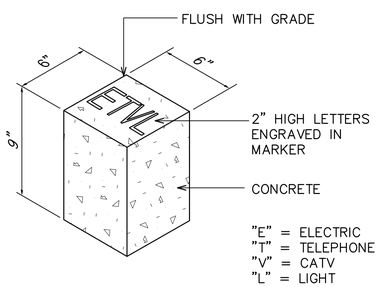


## B / E401 CONCRETE CONDUIT STUB-OUT MARKER

NOT TO SCALE

## BACKFILL NOTES:

TYPE "A" BACKFILL – EARTH & GRAVEL. ROCK SIZE TO BE 1" MAX & THE MIXTURE TO CONTAIN NOT MORE THAN 50% BY VOLUME OF ROCK PARTICLES. THE MATERIAL SHALL BE NONEXPANSIVE. 95% COMPACTION.

TYPE "B" BACKFILL – EARTH & GRAVEL. MIXTURE MUST PASS A 1/2" MESH SCREEN & CONTAIN NOT MORE THAN 20% BY VOLUME OF ROCK PARTICLES. 95% COMPACTION.

NOTE – IF NORMAL MATERIAL AT BOTTOM OF TRENCH IS NOT TYPE "B", AN ADDITIONAL 3" SHALL BE EXCAVATED & TYPE "B" BACKFILL PROVIDED.

CONCRETE – 3" ENCASEMENT, 2800 PSI COMPRESSIVE STRENGTH @ 28 DAYS.

NO. 2 ROCK (ASTM C33, NO. 4 GRADATION) WRAPPED IN NON-WOVEN FIBER FABRIC (MIRAFI 180N OR EQUIVALENT) SEE GENERAL NOTE 3 FOR MORE DETAILS.

## CONDUIT SCHEDULE

| ITEM | DESCRIPTION |
|---|---|
| 2L | 2" STREET LIGHT |
| 3L | 3" STREET LIGHT |
| 4V | 1–4"C CATV |
| 3-4V | 3–4"C CATV |
| 4-4V | 4–4"C CATV |
| 2-4T | 2–4"C HTCO |
| 4-4T | 4–4"C HTCO |
| 6-4T | 6–4"C HTCO |
| 8-4T | 8–4"C HTCO |
| 2-6E | 2–6"C HECO |
| 4-6E | 4–6"C HECO |
| 6-6E | 6–6"C HECO |
| 8-6E | 8–6"C HECO |
| 10-6E | 10–6"C HECO |

GENERAL NOTES:

1. REFER TO CIVIL DETAILS FOR CONSTRUCTION OF ROADWAY IMPROVEMENTS.

NOTES: SEE PLAN SHEETS FOR QUANTITY & SIZE OF CONDUITS.

APPROVED BY:

CHIEF, TRAFFIC SIGNALS AND TECHNOLOGY — DATE
DEPT. OF TRANSPORTATION SERVICES
CITY & COUNTY OF HONOLULU

CHIEF, TRAFFIC REVIEW BRANCH — DATE
DEPT. OF PLANNING AND PERMITTING
CITY & COUNTY OF HONOLULU

CHIEF, CIVIL ENGINEERING BRANCH, DPP — DATE

PROGRAM ADMINISTRATOR, MECHANICAL/ELECTRICAL — DATE
DIVISION, DEPT. OF DESIGN AND CONSTRUCTION
CITY & COUNTY OF HONOLULU


WILSON OKAMOTO CORPORATION
1907 South Beretania Street Suite 400
Honolulu, Hawaii, U.S.A. 96826
PH 808-946-2277 FX 808-946-2253
www.wilsonokamoto.com


PROJECT ID
QUEEN ST/ WAIMANU ST CROSSWALK IMPROVEMENTS PHASE 2
HONOLULU, HAWAII

*PREPARED FOR*
HAWAII COMMUNITY DEVELOPMENT AUTHORITY

CONSULTANT
*Ronald N.S. Ho & Associates, Inc.*
*Electrical Engineers*
*2153 North King Street, Suite 201*
*Honolulu, Hawaii 96819*

FOR COORDINATION PURPOSES ONLY

NOT TO BE USED FOR CONSTRUCTION

| DESIGNED BY: SNS | SUPERVISED BY: SNS |
|---|---|
| DRAWN BY: CAD | CHECKED BY: SS |
| CAD FILE: | PROJECT NO.: 10736-01 |
| SCALE: AS NOTED | DATE: JUNE 7, 2023 |

| REV | DATE | DESCRIPTION |
|---|---|---|

SHEET TITLE
DUCT SECTIONS

DRAWING NO.
E401

# GENERAL NOTES

A. CONTRACTOR SHALL VERIFY ALL FIELD DIMENSIONS AND CONDITIONS PRIOR TO STARTING WORK. DISCREPANCIES SHALL BE PROMPTLY REPORTED IN WRITING TO THE ENGINEER FOR RESOLUTION OR CLARIFICATION.

B. OMISSIONS OR CONFLICTS BETWEEN THE VARIOUS ELEMENTS OF THE DRAWINGS AND/OR SPECIFICATIONS SHALL BE BROUGHT TO THE ATTENTION OF THE ENGINEER BEFORE PROCEEDING WITH ANY WORK SO INVOLVED.

CONTRACTOR SHALL BE RESPONSIBLE FOR ERECTING SAFETY BARRIERS, WARNING SIGNS, CONTROLLING TRAFFIC, AND ALL OTHER ISSUES RELATED TO JOBSITE SAFETY.

THE CONTRACTOR SHALL BE RESPONSIBLE FOR THE DESIGN AND PROVISION OF ALL FORM WORK, TEMPORARY BRACING, SHORING, ETC.

# CONCRETE REPAIR NOTES:

## 1. CONCRETE REPAIR MATERIAL

A. USE PRODUCTS FOR CONCRETE SPALL REPAIR THAT ARE SPECIFICALLY DESIGNED FOR THE STRUCTURAL REPAIR OF DAMAGED CONCRETE. SUBMIT ALL PRODUCTS FOR REVIEW AND APPROVAL PRIOR TO ORDERING MATERIAL.

B. SUBMIT PRODUCT DATA, INCLUDING MANUFACTURER'S INSTRUCTIONS AND RECOMMENDATIONS, FOR REVIEW BY THE ENGINEER PRIOR TO ORDERING MATERIAL.

C. CONCRETE REPAIR MATERIAL SHALL BE A FACTORY BLENDED PATCHING MATERIAL CONTAINING LATEX POLYMER TYPE ADMIXTURE, SYNTHETIC FIBER AND CORROSION INHIBITOR, HAVING A MINIMUM COMPRESSIVE STRENGTH OF 5,000 PSI AT 28 DAYS AND MAXIMUM WATER/CEMENT RATIO OF 0.40.

D. STRICTLY FOLLOW THE MANUFACTURER'S INSTRUCTIONS AND RECOMMENDATIONS ON THE AMOUNT OF WATER TO BE ADDED.

E. WHEN RECOMMENDED MY THE MANUFACTURER FOR LARGER REPAIRS, ADD AGGREGATE TO THE MIX. THE APPROPRIATE AGGREGATE SIZE SHALL BE SPECIFIED BY THE MANUFACTURER.

F. AFTER MIXING, THE REPAIR MATERIAL SHALL HAVE THE APPROPRIATE WORKABILITY FOR PLACEMENT IN FORMS. SUPERPLASTICIZER ADMIXTURE SHALL NOT BE ADDED UNLESS SPECIFICALLY ALLOWED BY PATCHING MORTAR MANUFACTURER.

## 2. REINFORCING STEEL:

A. STEEL REINFORCEMENT USED IN CONCRETE REPAIRS SHALL BE DEFORMED BAR CONFORMING TO ASTM A615 OR A706, GRADE 60.

B. STEEL REINFORCEMENT SHALL BE FREE OF LOOSE RUST OR ANY SUBSTANCE THAT WILL INHIBIT BONDING WITH EPOXY OR CONCRETE REPAIR MATERIAL.

## 3. CONCRETE REPAIR PROCEDURE:

A. CONTRACTOR SHALL USE MATERIAL SUPPLIERS AND EXPERIENCED PERSONNEL FAMILIAR IN CONCRETE REPAIR AND RESTORATION WORK. MANUFACTURER OF REPAIR PRODUCTS SHALL HAVE A REPRESENTATIVE IN HAWAII THAT CAN ADVISE AS TO THE PROPER USE OF THEIR PRODUCT.

B. PRIOR TO STARTING ANY DEMOLITION WORK, PERFORM A VISUAL SURVEY THE TOP AND SOFFIT OF THE CATCH BASIN TOP SLAB. DELAMINATED OR SPALLED CONCRETE IN AREAS BEYOND WHAT IS SHOWN ON THE DEMOLITION PLAN, AND CRACKS IN THE CONCRETE WIDER THAN 0.03-INCH SHALL BE REPORTED TO THE ENGINEER. ADDITIONAL REPAIRS WILL ONLY BECOME A PART OF THE WORK UPON APPROVAL BY OWNER'S REPRESENTATIVE.

C. ON-SITE OBSERVATION BY THE CONTRACTOR AND MATERIAL MANUFACTURER'S REPRESENTATIVE SHALL ALSO BE INCLUDED AS NEEDED. ANY REVISIONS OR RECOMMENDATIONS TO IMPROVE REPAIR MATERIALS OR METHODS SHALL BE SUBMITTED IN WRITING TO THE ENGINEER PRIOR TO STARTING THE WORK.

D. BEFORE ANY DEMOLITION, CHIPPING, JACK HAMMERING, DRILLING, CORING, OR ANY OTHER DESTRUCTIVE REMOVAL WORK BEGINS, CONTRACTOR SHALL VERIFY THAT THE OPERATION WILL NOT INJURE, OVERSTRESS, CRACK AND BREAK OR OTHERWISE DAMAGE EXISTING WORK TO REMAIN. PROVIDE SHORING, AS NEEDED, FOR THE SLAB PRIOR TO DEMOLITION WORK, AND LEAVE IN PLACE UNTIL REPAIR MATERIAL HAS PROPERLY CURED.

E. ALL DAMAGED, DETERIORATED, LOOSENED (DELAMINATED), OR UNBONDED PORTIONS OF EXISTING CONCRETE UNTIL SOUND CONCRETE IS ENCOUNTERED. SOUND CONCRETE IS THE CONDITION WHERE THE EXPOSED SURFACE IS FIRMLY BONDED TO THE SURROUNDING CONCRETE AND DEVOID OF LOOSE PIECES, CRACKS, AND DELAMINATIONS (UNBONDED CONDITION BELOW THE SURFACE.) WHEN STRUCK WITH A HAMMER, SOUND CONCRETE WILL NOT PRODUCE A HOLLOW SOUND. IF A HOLLOW SOUND IS HEARD WHEN THE SURFACE IS STRUCK WITH A HAMMER, THE SURFACE CONCRETE IS NOT BONDED TO THE CONCRETE BELOW.

F. CHIPPED OUT REPAIR AREA SHALL NOT BE LESS THAN ¾ INCH CLEAR BELOW, ABOVE, AND BEHIND ALL EXPOSED, CORRODED REINFORCING BAR.

G. EDGES OF THE CHIPPED OUT AREA SHALL BE SAW CUT PERPENDICULAR TO THE CONCRETE SURFACE FOR A MINIMUM DEPTH OF AT LEAST ¾ INCH OR TO THE MINIMUM THICKNESS REPAIR MATERIAL MAY BE APPLIED, WHICHEVER IS GREATER. DO NOT SAW CUT THROUGH EXISTING REINFORCING BARS. DO NOT FEATHEREDGE THE REPAIR MATERIAL.

H. EXPOSED EXISTING STEEL REINFORCEMENT SHALL BE CLEANED OF ALL SCALE, RUST, DIRT, OIL OR ANY OTHER DELETERIOUS MATERIAL.

I. AFTER THE BAR HAS BEEN CLEANED BY HAND TOOLS OR WIRE BRUSH, MEASURE THE DIAMETER OF THE EXPOSED REINFORCING BARS AT THE EDGE OF THE CHIPPED OUT AREA. WHERE TRANSVERSE BARS HAVE DIAMETERS OF LESS THAN 7/16-INCH, ADD EPOXY DOWEL NEXT TO EXISTING LONGITUDINAL BAR. SEE TYPICAL DETAIL.

J. IF NEEDED, MECHANICALLY ROUGHEN CONCRETE SURFACE TO PROMOTE BONDING OF THE REPAIR MATERIAL. THROUGHLY CLEAN THE REPAIR ARE OF ALL DUST AND DEBRIS FROM THE CONCRETE AND STEEL SURFACES.

K. FORM REPAIR AREA TO MATCH STANDARD CURB INLET SHOWN IN THE CITY AND COUNTY OF HONOLULU, DEPARTMENT OF PUBLIC WORKS, STANDARD DETAIL FOR PUBLIC WORKS CONSTRUCTION.

L. APPLY LATEX POLYMER BONDING AGENT TO SURFACE OF EXISTING CONCRETE PRIOR TO PLACING CONCRETE REPAIR MATERIAL. FOLLOW MANUFACTURER'S INSTRUCTIONS FOR SURFACE PREPARATION AND USAGE OF THE BONDING AGENT. APPLY CORROSION INHIBITOR SUCH AS "DURALPREP A.C. BY EUCLID CHEMICAL", "MCI 2022 BY CORTEC CORPORATION", OR "MAPEFER 1K BY MAPE", DIRECTLY TO ALL REINFORCING PRIOR TO POURING OF CONCRETE. PLACE REPAIR MATERIAL WITHIN THE OPEN TIME OF THE BONDING AGENT.

M. PLACE CONCRETE REPAIR MATERIAL IN ACCORDANCE WITH MANUFACTURER'S INSTRUCTIONS. CONSOLIDATE WITH MECHANICAL VIBRATION AS NEEDED TO CONSOLIDATE MATERIAL..

N. FINISH SURFACE OF CONCRETE REPAIRS TO MATCH EXISTING SURFACE FINISH IMMEDIATELY ADJACENT TO REPAIR.

O. FOLLOW MANUFACTURER'S INSTRUCTIONS FOR CURING OF THE REPAIR MATERIAL. PROTECT REPAIR FROM DAMAGE OR LOADING UNTIL THE MATERIAL HAS ACHIEVED IT'S DESIGN STRENGTH.

P. CAREFULLY REMOVE FORMWORK TO AVOID DAMAGE TO THE SURFACE OF THE REPAIR. HONEYCOMBS OR OTHER SURFACE DEFECTS SHALL BE PATCHED PER THE MANUFACTURER'S INSTRUCTION.

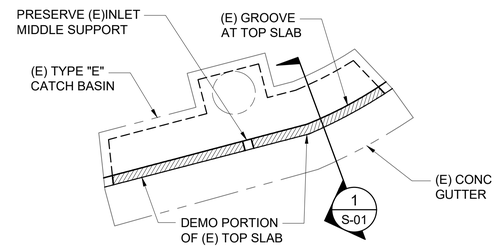


A S-01 EXISTING CATCH BASIN DEMO PLAN
SCALE: 1/4" = 1'-0"

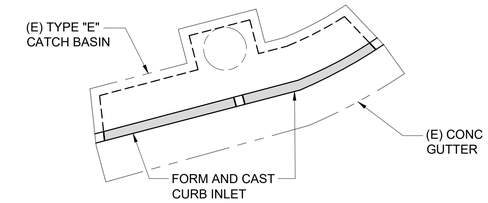


B S-01 EXISTING CATCH BASIN REPAIR PLAN
SCALE: 1/4" = 1'-0"

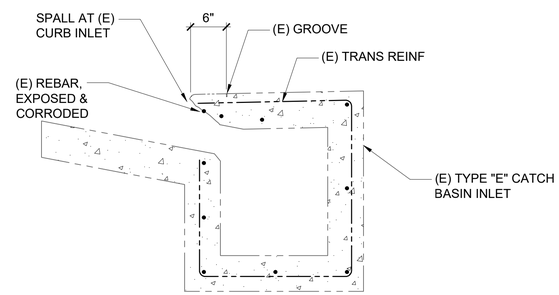


1 S-01 EXISTING DRAIN INLET SECTION
SCALE: 1" = 1'-0"

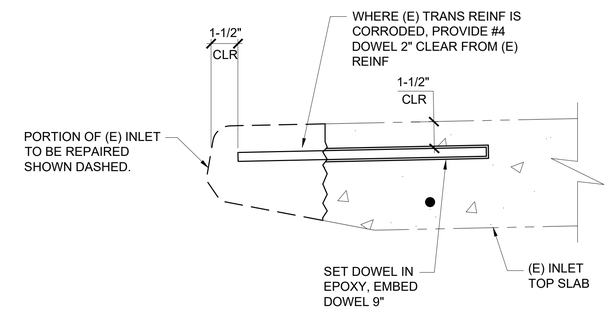


2 S-01 TYP EPOXY DOWEL DETAIL
SCALE: 3" = 1'-0"

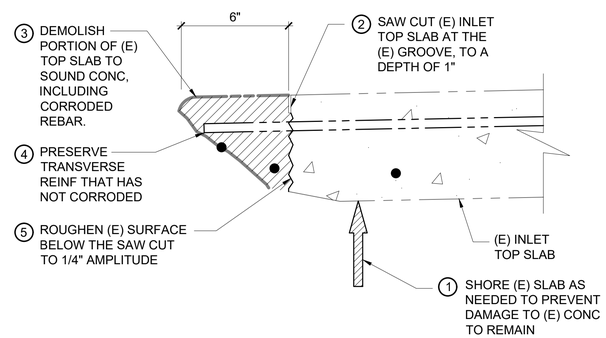


3 S-01 DEMO OF DAMAGED CONCRETE
SCALE: 3" = 1'-0"

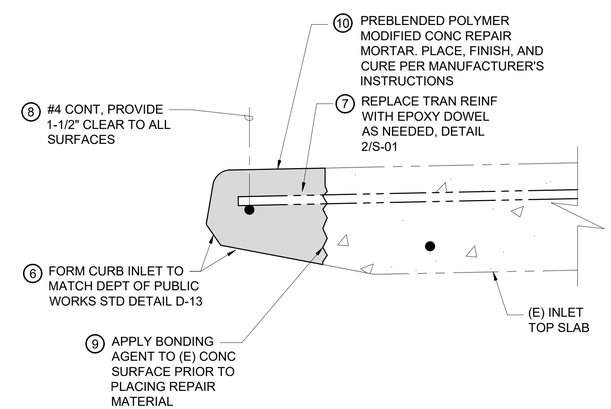


4 S-01 REPAIR OF INLET
SCALE: 3" = 1'-0"


WILSON OKAMOTO CORPORATION
1907 South Beretania Street Suite 400
Honolulu, Hawaii, U.S.A. 96826
PH 808-946-2277 FX 808-946-2253
www.wilsonokamoto.com


PROJECT ID
QUEEN ST/ WAIMANU ST CROSSWALK IMPROVEMENTS PHASE 2
HONOLULU, HAWAII

PREPARED FOR
HAWAII COMMUNITY DEVELOPMENT AUTHORITY


CONSULTANT
COFFMAN ENGINEERS
745 Fort Street, Suite 400
Honolulu, HI 96813
ph 808.687.8884
www.coffman.com


FOR COORDINATION PURPOSES ONLY

NOT TO BE USED FOR CONSTRUCTION

| | |
|---|---|
| DESIGNED BY: MWM | SUPERVISED BY: . |
| DRAWN BY: MTM | CHECKED BY: MWM |
| CAD FILE: | PROJECT NO.: 10736-01 |
| SCALE: AS NOTED | DATE: JUNE 7, 2023 |

| REV | DATE | DESCRIPTION |
|---|---|---|

SHEET TITLE
EXISTING CATCH BASIN DEMO AND REPAIR NOTES, PLANS AND DETAILS

DRAWING NO.
S-01

## TRAFFIC SIGNAL POLE FOUNDATION NOTES:

A. CONCRETE FOR FOUNDATION SHALL HAVE THE FOLLOWING PROPERTIES:
   1. DESIGN COMPRESSIVE STRENGTH AT 28-DAYS 4,000 PSI
   2. MAXIMUM WATER-CEMENTITIOUS MATERIAL RATIO 0.45
   3. TOP SIZE AGGREGATE 3/4"

B. REINFORCING STEEL SHALL BE DEFORMED BAR COMFORM TO ASTM A615, GRADE 60.

C. SUBMIT CONCRETE MIX DESIGN FOR REVIEW BY THE ENGINEER PRIOR TO PLACING CONCRETE.

D. PRIOR TO EXCAVATING FOR THE FOOTING OR FABRICATING THE REINFORCING STEEL, CONFIRM THAT THE ANCHOR BOLTS FOR THE POLE WILL BE INSIDE OF THE CIRCULAR TIES. NOTIFY THE ENGINEER IF THERE IS CONFLICT WITH THE ANCHOR BOLTS AND REINFORCING.

E. EXCAVATE HOLE FOR FOOTING BY AUGER. IF GROUND WATER IS ENCOUNTERED, PROVIDE A SLEEVE TO MAINTAIN THE SIDES OF THE EXCAVATION. USE TERMIE METHOD TO PLACE CONCRETE AND SLOWLY WITHDRAWN SLEEVE DURING CONCRETE PLACEMENT.

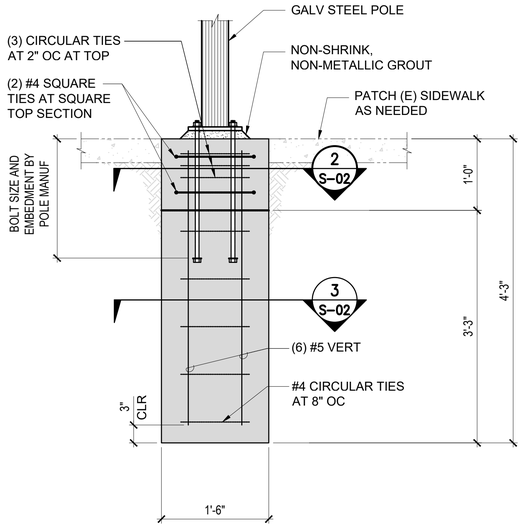


1 S-02 TRAFFIC SIGNAL POLE FOOTING DETAIL
SCALE: 1" = 1'-0"

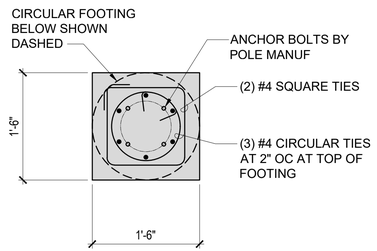


2 S-02 PLAN-SECTION AT TOP OF FOOTING
SCALE: 1" = 1'-0"

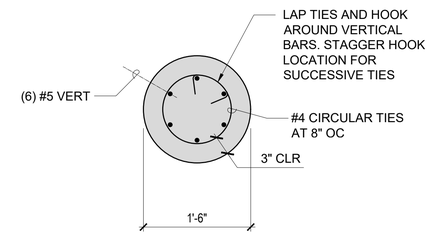


3 S-02 PLAN-SECTION AT BOTTOM OF FOOTING
SCALE: 1" = 1'-0"


WILSON OKAMOTO CORPORATION
1907 South Beretania Street Suite 400
Honolulu, Hawaii, U.S.A. 96826
PH 808-946-2277 FX 808-946-2253
www.wilsonokamoto.com


PROJECT ID
QUEEN ST/ WAIMANU ST CROSSWALK IMPROVEMENTS PHASE 2
HONOLULU, HAWAII

PREPARED FOR
HAWAII COMMUNITY DEVELOPMENT AUTHORITY


CONSULTANT
COFFMAN ENGINEERS
745 Fort Street, Suite 400
Honolulu, HI 96813
ph 808.687.8884
www.coffman.com


FOR COORDINATION PURPOSES ONLY

NOT TO BE USED FOR CONSTRUCTION

| | |
|---|---|
| DESIGNED BY: MWM | SUPERVISED BY: - |
| DRAWN BY: MTM | CHECKED BY: MWM |
| CAD FILE: | PROJECT NO.: 10736-01 |
| SCALE: AS NOTED | DATE: JUNE 7, 2023 |

| REV | DATE | DESCRIPTION |
|---|---|---|

SHEET TITLE
TRAFFIC SIGNAL POLE FOUNDATION NOTES AND DETAILS

DRAWING NO.
S-02